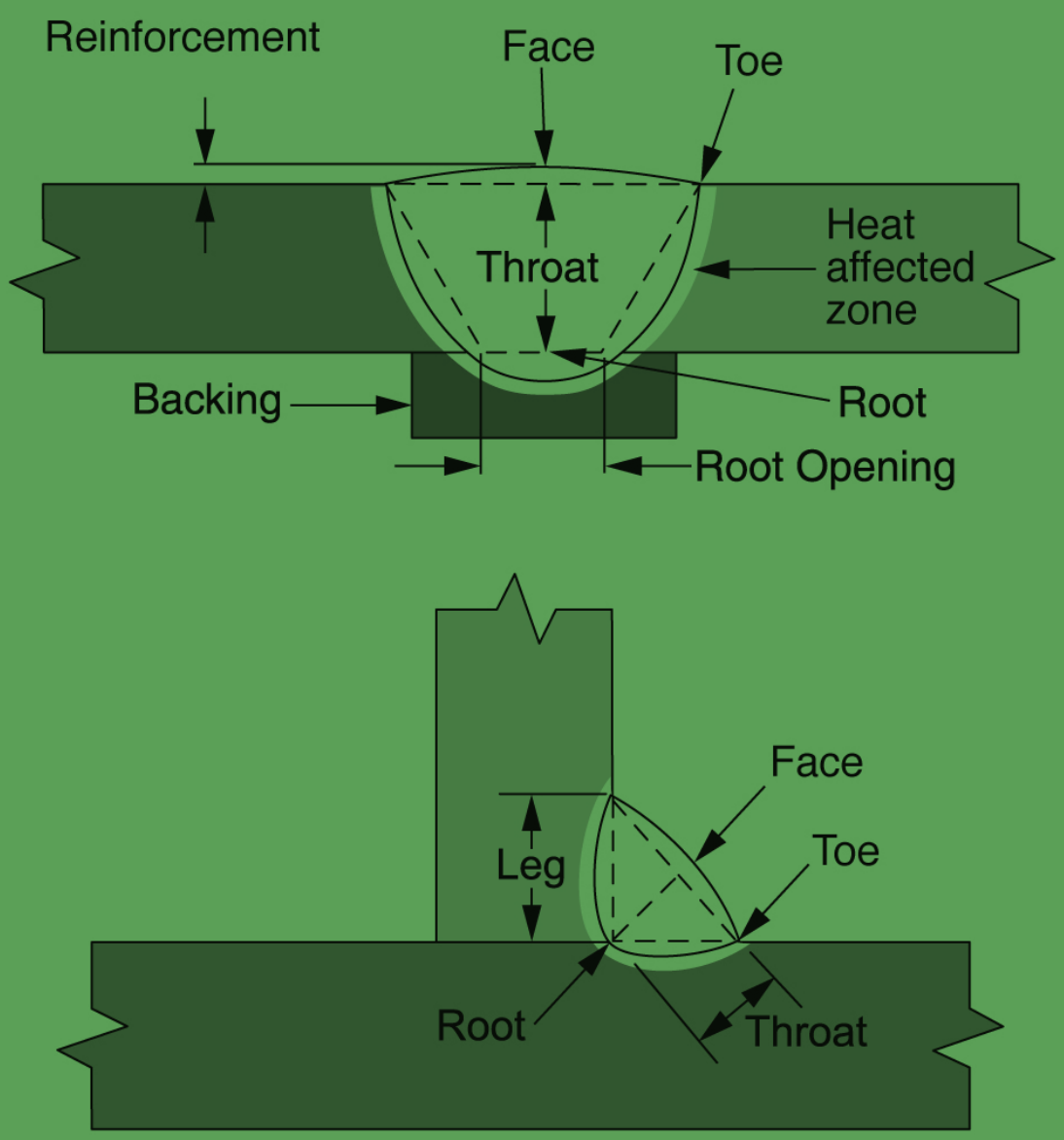

Design Guide 21

Welded Connections—A Primer for Engineers

Second Edition

Smarter. Stronger. Steel.
American Institute of Steel Construction
312.670.2400 | www.aisc.org

Design Guide 21

Welded Connections—A Primer for Engineers

Second Edition

Duane K. Miller, PE, ScD

American Institute of Steel Construction

The information presented in this publication has been prepared following recognized principles of design and construction. While it is believed to be accurate, this information should not be used or relied upon for any specific application without competent professional examination and verification of its accuracy, suitability and applicability by a licensed engineer or architect. The publication of this information is not a representation or warranty on the part of the American Institute of Steel Construction, its officers, agents, employees or committee members, or of any other person named herein, that this information is suitable for any general or particular use, or of freedom from infringement of any patent or patents. All representations or warranties, express or implied, other than as stated above, are specifically disclaimed. Anyone making use of the information presented in this publication assumes all liability arising from such use.

Caution must be exercised when relying upon standards and guidelines developed by other bodies and incorporated by reference herein since such material may be modified or amended from time to time subsequent to the printing of this edition. The American Institute of Steel Construction bears no responsibility for such material other than to refer to it and incorporate it by reference at the time of the initial publication of this edition.

Printed in the United States of America

Author

Duane K. Miller, Sc.D., P.E. is the Engineering Services Manager and Welding Design Consultant for The Lincoln Electric Company, Cleveland, Ohio. He is a former Chair of the AWS D1 Structural Welding Code Committee. He was the first Chair of the Seismic Welding Subcommittee and is a former co-chair of the AASHTO-AWS D1.5 Bridge Welding Code Committee. He currently serves on the AWS D1 committee, the AWS Technical Activities Committee, and the AISC Committee on Specifications. He also serves on the AWS Board as a Director-at-Large.

Acknowledgments

Many people participated in the production of this document. The contributions of the individuals on the review panel (listed separately) are gratefully acknowledged; given the length of this Guide, their undertaking was no minor task, and the detailed comments submitted by various individuals improved the quality of this publication.

Carlo Lini collected various Solution Center inquiries and drafted some initial replies, while Leigh Arbor assisted with the drafting of portions for the Seismic chapter. Margaret Matthew patiently oversaw the project, permitting the schedule to drift to accommodate the author's schedule. The contributions of Thomas Schlafly are incorporated into nearly every section of this Guide. Tom's commitment to technical accuracy, clear communication and grammatical accuracy required untold hours of review, often performed on the train during his daily commutes.

Subject matter experts reviewed specialized portions of the Guide, and the contributions of the following individuals as related to these topics are acknowledged: Dr. Caroline Bennett, galvanizing and LMAC; Carlos de Oliveira, castings; Doug Rees-Evans, steel issues; Mark Davis, phased array ultrasonic testing.

Dr. John M. Barsom thoroughly critiqued the entire Guide, with additional focus directed at the chapters on fatigue and fracture. Dr. Barsom has served as a mentor and role model in my life for more than 20 years, and words cannot express my appreciation for his contributions, to not only this Guide, but to my professional life.

This document would not have been possible without the assistance of my Lincoln Electric colleague, Michael Florczykowski, who functioned as a master editor for the project. In addition to providing technical reviews of the content, he made certain the document adhered to editorial guidelines, managed the production of artwork and tables, and helped keep the project on schedule. Ron Skoczen prepared most of the figures, and Carla Rautenberg provided editorial reviews; their contributions are acknowledged and appreciated.

While not part of this project, the role of Dr. Omer W. Blodgett as a mentor to the author is humbly acknowledged. While this acknowledgment was in preparation, Dr. Blodgett passed away; he was 99 years old. For more than 30 years, Dr. Blodgett shared his knowledge and passion for welding with me in a life-changing way. For his example, I will ever be grateful. This publication is dedicated to his memory.

Finally, the ongoing support of The Lincoln Electric Company is acknowledged. The company has been unwavering in its support of my professional activities involving technical committees of organizations such as AISC and AWS. The flexibility afforded me to pursue assignments such as writing this Design Guide is appreciated.

Review Committee:

Craig Archacki	Steve Herth	Jason McCormick	Robert Shaw
John Barsom	Mark Holland	Larry Muir	Victor Shneur
Tom Ferrell	Benjamin Kaan	Jeff Packer	Ray Tide
Lou Geschwindner	Larry Kloiber	Davis Parsons	Ron Yeager
Jay Harris	Larry Kruth	Tom Schlafly	
Steve Herlache	Keith Landwehr*	Bill Scott	*deceased

Preface

No Preface was supplied for the first edition of this Design Guide, and that was an unfortunate oversight. The First Edition came about because of the vision of Dr. Charles Carter, who reasoned that since there was a Design Guide on bolting (Design Guide 17: *High Strength Bolts—A Primer for Structural Engineers*, by Dr. Geoffrey Kulak), there should be a similar document on welding. An outline of the expected coverage of the Design Guide on welding was prepared and circulated to a review panel and AISC staff. Suggestions were made for a few deletions and many additions.

The comments of one of the outline reviewers, the late William "Bill" Liddy, significantly changed the scope of the anticipated document. At the time, Bill was working in the AISC Steel Solutions Center, and he expressed his hope that the anticipated publication would provide answers to the welding-related questions that he frequently received in the Solution Center. He dug into his file of questions and added those topics to the outline, creating significant initial frustration on my part as I anticipated the additional work. But Bill's idea was sound and ultimately added great value to the Guide. The content of Chapter 12, Special Welding Applications, of the First Edition addressed the topics Bill identified. Mr. Liddy's vision made the first edition of Design Guide 21 more popular, and it continues to be a go-to resource for the Solution Center.

This edition expanded upon Bill's vision. The former Chapter 12 became Chapter 14, and retains the same title, but has been expanded to address additional topics, all subjects of Solution Center inquiries; the coverage of this chapter assumes that an unusual application is involved and provides information necessary for dealing with the situation. A new Chapter 15, Problems and Fixes, has been added that does what the title suggests—provides practical solutions to unanticipated problems. The scope of Chapter 16, The Engineer's Role in Welded Construction, has changed from the First Edition, with the current focus on providing guidance for situations when AWS D1.1 requires the engineer's approval. All of these chapters are the result of Bill's ongoing influence.

New to the Second Edition are the chapters on seismic (Chapter 11) and fracture (Chapter 13), with a primary focus on welding-related issues. These chapters were requested by AISC staff and are totally new.

USER NOTE:

To aid in the usability of this Design Guide, the following have been provided:

a. The Table of Contents lists the subject matter of chapters, sections and subsections.
b. An index of key words is provided at the end of the document.
c. References to related materials are provided throughout.
d. References to AWS D1.1 and AISC documents dealing with the subject matter are listed.
e. A listing of acronyms and their meaning is summarized at the end of the document.

TABLE OF CONTENTS

Chapter 1
Introduction

1.1 IMPORTANCE OF WELDING

Welding is an established and essential tool of the steel construction industry. Before welding was possible, rivets were used to create structural members and connect them. Today, welding is used to construct members such as plate girders and box sections, as well as to connect structural members together reliably and cost-effectively. Along with the contributions of high-strength bolts, welding has rendered riveting obsolete.

Welding permits shapes, plates, and even steel castings and forgings to be connected in nearly endless combinations. Steel components can be directly connected without the need for mechanical fasteners and the associated connection materials. Welded connections are aesthetically pleasing, directly satisfying the "form ever follows function" criteria. Steels of various strength levels or thicknesses can be joined, optimizing designs by strategically placing materials of higher capacity into regions of higher demand. The versatility of welding gives the designer greater freedom than any other method of joining.

Connections are critical to the performance of structural systems, and welded connections are no exception. Accordingly, when welding is improperly used, whether through incorrect design or detailing of the connection, or when a weld is made improperly during fabrication or erection, the connection may fail. Nearly everyone involved with the design, detailing, fabrication, erection and inspection of welded structures needs to have some knowledge of welding, and this Guide contains basic coverage of the major welding-related issues associated with steel building construction. The principles set forth are essential to achieving dependable cost-effective welded connections in steel structures.

1.2 SCOPE OF WELDING

Welding engineering is a complex science, involving design and design details, metallurgy, the production aspects of the various welding processes, and inspection. Design involves the selection of joint types, weld types, sizing of welds, and selection of the required weld metal strength, as well as the base metal grades and types. Design details include weld access holes, copes, backing, one-sided versus two-sided welds, groove weld geometries—V versus bevel, for example—and weld tabs. Metallurgy addresses material composition, physical and mechanical properties, compatibility of materials, preheat for welding, interpass temperature, analysis of weld cracking, and whether post-weld heat treatments will be required. Selecting the best welding process for a given application is a complex issue that may result in different correct choices depending upon the particular circumstances of a specific aspect of a project. Inspection of welds ranges from visual to nondestructive processes, such as radiographic and ultrasonic testing. All of these elements of welding may have a significant effect on a completed project and this Guide addresses each of these aspects in a systematic manner.

1.3 WELDING-RELATED CODES AND SPECIFICATIONS

A variety of welding-related codes and specifications govern the design, fabrication, erection and inspection of welded steel structures. AISC standards generally address the design requirements for the structure, while AWS standards typically focus on welding issues. Of necessity, there is some overlap between the coverage of AISC and AWS standards, and a few differences between these standards have been produced by the separate ANSI consensus committees that are responsible for each standard. A general summary of commonly used welding-related standards is in the following sections.

1.3.1 AISC *Specification for Structural Steel Buildings*

For steel building construction in the United States, the primary governing standard is the AISC *Specification for Structural Steel Buildings* (AISC, 2016d), hereafter referred to as the AISC *Specification*. References in this Guide are to the 2016 edition of that standard unless otherwise noted. The AISC *Specification* contains a variety of welding-related requirements, including but not limited to the following:

- Acceptable steel designations (Section A3.1)
- Acceptable filler metals (Section A3.5)
- Requirements for splices in heavy sections (Section J1.5)
- Beam copes and weld access holes (Section J1.6)
- Welds in combination with bolts (Section J1.8)
- Details of groove welds (Section J2.1)
- Details of fillet welds (Section J2.2)
- Available strength of welded joints (Table J2.5)
- Shop fabrication/welding issues (Section M2)

- Field erection/welding issues (Section M4)
- Weld quality control and quality assurance issues (Chapter N)
- Weld details for fatigue (Appendix 3)
- Welding issues associated with existing structures (Appendix 5)

In addition, and importantly, AISC *Specification* Section J2 invokes all the provisions of AWS D1.1, except as noted in Section J2.

1.3.2 AWS D1.1/D1.1M *Structural Welding Code—Steel*

The AWS D1.1/D1.1M *Structural Welding Code—Steel* (AWS, 2015c), herein referred to as AWS D1.1, is a comprehensive welding code governing the design of connections, including connection details, welding procedures, acceptable base metals, filler metals and welding joint details, fabrication and erection requirements, welder qualification requirements, stud welding provisions, inspection requirements, and provisions for welding on existing structures. In addition to welding issues, AWS D1.1 contains requirements for non-welding, metal-working operations, such as thermal cutting, heat curving and stress relieving. AWS D1.1 is intended to govern projects involving steel of ⅛ in. (3 mm) or thicker, with a specified minimum yield strength of 100 ksi (690 MPa) or less. The base metal types include carbon and low-alloy steels.

Major sections of AWS D1.1 include the following:

- Clause 1—General Requirements covers the scope of the code, limitations on its use, key definitions, and an outline of the responsibilities of the major parties involved with welding steel structures.
- Clause 2—Design of Welded Connections is divided into three parts. Part A deals with provisions common to all structures governed by the code. Part B addresses general requirements applicable to "nontubular connections"—that is, anything other than tubular connections, whether statically or dynamically loaded. Part C covers nontubular connections subject to cyclic loading.
- Clause 3—Prequalification is devoted solely to prequalified welding procedure specifications (WPS). For a WPS to be prequalified, it must comply with all the provisions of this clause of the code. Requirements include prequalified steels, filler metals, preheat levels, weld joint details, welding processes and welding parameters.
- Clause 4—Qualification addresses the two subjects of WPS qualification and welding personnel qualification. The types of tests necessary for qualification as well as limitations on the application of various qualification tests are fully detailed therein.
- Clause 5—Fabrication covers general fabrication practices and techniques required for all work performed in conformance with this code, whether the WPS employed are prequalified or qualified by test. Some workmanship standards are included in this clause.
- Clause 6—Inspection prescribes the responsibilities of the various inspectors associated with steel construction. Inspection tasks are outlined, and some workmanship criteria are contained in this clause. The techniques to be used with the various nondestructive testing methodologies are outlined, and acceptance criteria are supplied for different applications.
- Clause 7—Stud Welding details the requirements for the welding of shear studs, either by the stud welding process or by use of other arc welding processes such as shield metal arc welding (SMAW) or flux-cored arc welding (FCAW).
- Clause 8—Strengthening and Repairing Existing Structures briefly reviews the fundamental issues that must be addressed before modifications of existing structures are undertaken.
- Clause 9—Tubular Structures deals with construction with hollow structural sections (HSS), whether round, square or rectangular. The clause is divided into six parts dealing with Design, Prequalified WPS, WPS Qualification, Performance Qualification, Fabrication and Inspection.

AWS D1.1 also contains a series of Annexes and a helpful commentary that assists the user in correctly applying the code. Mandatory annexes are identified as normative and are part of the code provisions. Nonmandatory annexes are identified as informational and are not part of the code but are supplied for information.

AWS D1.1 is subject to change, and all references contained within this Guide refer to the 2015 edition of this standard unless otherwise noted.

1.3.3 AWS D1.3/D1.3M *Structural Welding Code—Sheet Steel*

AWS D1.3/D1.3M *Structural Welding Code—Sheet Steel* (AWS, 2008), hereafter referred to as AWS D1.3, covers welding of structural sheet and strip steels, including cold-formed members equal to or less than 3⁄16 in. (5 mm) thick. Applications wherein sheet steel is joined to supporting structural steel, such as decking to beams, are also covered. When AWS D1.1 and AWS D1.3 are concurrently specified, the applicable provisions of each apply.

AWS D1.3 is subject to change, and all references contained within this Guide refer to the 2008 edition of this standard unless otherwise noted.

1.3.4 AWS D1.4/D1.4M *Structural Welding Code—Reinforcing Steel*

AWS D1.4/D1.4M *Structural Welding Code—Reinforcing Steel* (AWS, 2011), hereafter referred to as AWS D1.4, covers welding of reinforcing steel (rebar) to itself, as well as reinforcing steel to plate or shapes. Appropriate applications for AWS D1.4 include welding rebar to embed plates, as well as rebar to various forms of steel used in composite construction.

AWS D1.4 lists the various grades of weldable reinforcing steel, the required preheat levels, required filler metal, as well as prescribing the details of welded connections involving the generally cylindrical reinforcing steel to flat surfaces, as well as cylindrical to cylindrical welds.

AWS D1.4 is subject to change, and all references contained within this Guide refer to the 2011 edition of this standard unless otherwise noted.

1.3.5 AWS D1.5/D1.5M *Bridge Welding Code*

The AWS D1.5/D1.5M *Bridge Welding Code* (AWS, 2015a), hereafter referred to as AWS D1.5, is a joint standard of the AWS and the American Association of State Highway Transportation Officials (AASHTO). The code covers both redundant and nonredundant (fracture critical) steel highway bridges. While AWS D1.5 and AWS D1.1 have many similar provisions, there are several significant differences as well as a variety of subtle differences. AWS D1.5 generally requires that WPS be qualified by test, with a few exceptions such as certain SMAW procedures and single-pass fillet weld welding procedures. Qualification testing involves Charpy V-notch (CVN) specimens and all weld metal tensile specimens. Nondestructive testing (NDT) requirements are specified in AWS D1.5.

AWS D1.5 is subject to change and all references contained within this Guide refer to the 2015 edition of this standard unless otherwise noted.

1.3.6 AWS D1.6/D1.6M *Structural Welding Code—Stainless Steel*

AWS D1.6/D1.6M *Structural Welding Code—Stainless Steel* (AWS, 2007), hereafter referred to as AWS D1.6, is analogous to AWS D1.1 but covers the topic of stainless steel instead of carbon steel. Coverage includes requirements for welding various grades of stainless to stainless, as well as stainless to carbon steel.

AWS D1.6 is subject to change, and all references contained within this Guide refer to the 2007 edition of this standard unless otherwise noted.

1.3.7 AWS D1.7/D1.7M *Guide for Strengthening and Repairing Existing Structures*

For projects involving strengthening and repair of existing structures, AWS D1.1, clause 8.1, requires the engineer to "establish a comprehensive plan for the work." To assist the engineer in this task, AWS D1.7 *Guide for Strengthening and Repairing Existing Structures* (AWS, 2010a), hereafter referred to as AWS D1.7, was developed. Unlike AWS D1.1, AWS D1.7 is a guide not a code. Accordingly, AWS D1.7 contains many suggestions and recommendations but does not mandate anything. AWS D1.7 includes guidance on these subjects: weldability, evaluation of existing welds, testing and sampling, heat straightening, strengthening and damage repair.

AWS D1.7 is subject to change, and all references contained within this Guide refer to the 2010 edition of this standard unless otherwise noted.

1.3.8 Seismic Codes with Welding Provisions

1.3.8.1 AISC *Seismic Provisions for Structural Steel Buildings*

The AISC *Seismic Provisions for Structural Steel Buildings* (AISC, 2016c), hereafter referred to as the AISC *Seismic Provisions*, were developed to augment the AISC *Specification*, adding provisions deemed necessary for high-seismic applications, where steel members are required to dissipate energy through controlled inelastic deformations in major seismic events. Members and connections in the seismic force-resisting system (SFRS), including the welds that join various members, are subject to the special requirements contained in the AISC *Seismic Provisions*.

The AISC *Seismic Provisions* contain some welding-related requirements, although most are covered by reference to AWS D1.8.

The AISC *Seismic Provisions* are subject to change, and all references contained within this Guide refer to the 2016 edition of this standard unless otherwise noted.

1.3.8.2 AISC *Prequalified Connections for Special and Intermediate Steel Moment Frames for Seismic Applications*

The AISC *Prequalified Connections for Special and Intermediate Steel Moment Frames for Seismic Applications* (AISC, 2016b), hereafter referred to as AISC *Prequalified Connections*, specifies design, detailing, fabrication and quality criteria for connections that are prequalified in accordance with the AISC *Seismic Provisions* for use with special moment frames (SMF) and intermediate moment frames (IMF). Some welding-related requirements are associated with the prequalified status of the listed connections. AISC *Prequalified Connections* is updated on a routine basis; this

Guide refers to the 2016 edition of that standard unless otherwise noted.

1.3.8.3 AWS D1.8/D1.8M *Structural Welding Code—Seismic Supplement*

AWS D1.8/D1.8M *Structural Welding Code—Seismic Supplement* (AWS, 2016), hereafter referred to as AWS D1.8, contains the additional provisions intended to be applied to joints or members that are designed to resist yield level stresses or strains during design earthquakes. Just as the AISC *Seismic Provisions* augment the AISC *Specification*, so AWS D1.8 supplements AWS D1.1. When AWS D1.8 is specified, all the provisions of AWS D1.1 still apply unless modified or superseded by AWS D1.8. In AWS D1.8, it is assumed that the structure has been designed in accordance with the AISC *Seismic Provisions*.

AWS D1.8 is subject to change, and all references contained within this Guide refer to the 2016 edition of this standard unless otherwise noted.

1.3.9 AISC *Code of Standard Practice*

The AISC *Code of Standard Practice for Steel Buildings and Bridges* (AISC, 2016a), hereafter referred to as the AISC *Code*, addresses a few welding-related issues, including the overall tolerances of fabricated members and erected assemblies. Basic tolerances for architecturally exposed structural steel (AESS) applications are also listed. Reference to the AISC *Code* is to the 2016 edition unless otherwise noted.

1.3.10 Other AWS D1 Codes

The AWS D1 publications include other standards governing applications that are beyond the scope of this Guide, including:

- AWS D1.2/D1.2M *Structural Welding Code—Aluminum* (AWS, 2014c)
- AWS D1.9/D1.9M *Structural Welding Code—Titanium* (AWS, 2015d)

1.3.11 Other AWS Standards

The AWS A5 *Filler Metal Specifications* govern the properties of the filler metals used for welding, whether electrodes, fluxes, rods or shielding gases. These standards are somewhat analogous to ASTM specifications for steels; the A5 standards specify chemistries for either the filler metal or the deposited weld metal, mechanical properties of deposited welds, as well as packaging requirements.

AWS A2.4 *Standard Symbols for Welding, Brazing, and Nondestructive Examination* (AWS, 2012d) is the standard that defines the proper use of welding symbols.

AWS A3.0/A3.0M *Standard Welding Terms and Definitions* (AWS, 2010d) provides definitions of welding and cutting terms.

Field welding with FCAW-S (courtesy of The Lincoln Electric Company).

Chapter 2
Welding and Thermal Cutting Processes

2.1 INTRODUCTION

There are approximately 100 different welding and thermal cutting processes. Currently, in the fabrication and erection of steel buildings, a few welding and cutting processes dominate. These processes, plus a few others that are occasionally used for specialized applications, will be covered in this chapter.

The choice of welding process is usually left up to the contractor because the contractor is typically best positioned to select the optimal process for a given application. Additionally, contractors may have preferred processes and may have significant resources that are dedicated to a specific process: welder qualifications, welding procedure specifications, equipment, and perhaps most importantly, experience. In unique situations, the engineer may specify the use of a specific process or restrict the use of a specific process, but this practice is uncommon. The selection of the welding process is typically considered part of the means and methods of construction, and the choice of process may significantly affect the cost of a project. When properly used, all of the welding processes listed in AWS D1.1 (AWS, 2015c) are capable of producing welds with the requisite quality for building construction. Conversely, any welding process can be abused and produce welds of poor quality if improper procedures are used or if the welder's skills are inadequate.

Although the selection and control of the welding process is typically the responsibility of the contractor, it is important that all parties involved understand these processes in order to ensure high quality and economical fabrication. Particularly when problems arise on a project, the engineer may be required to become involved with welding process issues, and a basic knowledge of how the process operates will aid in resolving construction problems.

2.1.1 Requirements for Welding

The welding processes commonly used for structural steel fabrication and erection all involve melting and mixing of filler metals and base metals, followed by solidification and fusion of the various materials. Brazing and soldering involve melting of the filler metal but not the base metal; these methods achieve fusion though only one material is melted. The oldest form of welding, technically named forge welding but commonly called blacksmith welding, involved heating (but not melting) two pieces of metal and, using a hammer to forge the two together, achieving fusion without any melting. This prompts the reasonable question, "What is required in order to achieve a weld—that is, fusion?"

A single piece of metal is composed of millions of individual atoms. Each atom is connected to surrounding atoms, resulting in what is considered a single solid piece of metal. In the simplest terms, fusing two separate pieces of pure metal together requires forming the same bonds between the two pieces as exist within the individual pieces. In metals, these metallic bonds form when individual metallic atoms are brought close enough together that they share a common "cloud" of electrons. The required closeness of the two atoms is close indeed, measured in units of angstroms (10^{-10} m). When metallic atoms are brought into close contact, metallurgical bonds form. Thus, the first requirement for fusion is atomic closeness.

The previous paragraph emphasizes metallic atoms to differentiate them from oxidized metals. When pure (nonoxidized) metallic surfaces are exposed to the atmosphere, such surfaces readily oxidize, and the forces that would normally encourage the metallic atoms to bond to each other are neutralized. Instead of bonding to another metallic atom, bonding is made with an oxygen atom. To achieve fusion, the atoms must be metallic (not combined with oxygen), leading to the second requirement for fusion: atomic cleanliness.

In theory, if two pieces of steel with oxide-free surfaces are brought into close contact, the attractive forces between the two pieces should cause the two to bond to each other. In practice, this does not happen because, on an atomic level, the atoms are separated by significant distances, restricting the first requirement for fusion: atomic closeness. Furthermore, surfaces will remain oxide-free for only short periods of time, and once such oxides form, the second requirement for fusion, atomic cleanliness, is violated. Thus, welding processes rely on a variety of methods of oxide removal and protection of the surfaces before welding. In arc welding, this is typically accomplished with fluxes and metallic elements in the filler metal that deoxidize the weld pool. Heat and/or pressure are used to bring the atoms into close proximity with one another.

With this background in mind, the following definition of a weld becomes more meaningful: "a localized coalescence of metals or nonmetals produced by heating the materials to the welding temperature, with or without the application of pressure, or by the application of pressure alone and with or without the use of filler material" (AWS, 2010d). The often misused term, filler metal, refers to "the metal or alloy to

be added in making a welded…joint" (AWS, 2010d). Filler metal is not the metal that is in a joint but the metal to be added, such as the electrodes that are used in welding.

In arc welding, heat is always applied by means of an electric arc, and pressure is not typically involved. All arc welding processes involve melting of the metals being joined, and this gives rise to another necessary component associated with the welding processes that involve the melting of metals: shielding.

Molten metal, such as the weld pool or metal droplets transferred across the arc, has the ability to dissolve large quantities of gases, such as nitrogen and oxygen. As the metal cools, the solubility of these gases in the liquid metal decreases and the dissolved gases either precipitate out or react with metallic atoms, forming various nitrides and oxides. When this evolution of gas occurs near the solidification temperature, the gas bubbles exiting the liquid metal can leave behind spheres or cylindrical cavities just as the metal solidifies. Such volumetric voids in the weld metal are called porosity. Additionally, small quantities of nitrogen left behind in the metal can cause embrittlement, even if no porosity is present. Metallic compounds can combine with atomic nitrogen and oxygen to form inclusions and reduce mechanical properties. Given that the atmosphere is composed of roughly 80% nitrogen and 19% oxygen, both the weld pool and the droplets of metal that leave the electrode must be protected from these gases.

Shielding is typically accomplished by one of two means or a combination of both. Fluxes melt to form slag, which may be used to coat the individual droplets of metal that leave the electrode. Additionally, once the slag contacts the weld pool, it floats to the surface and shields the pool as well. Slag acts as a mechanical barrier or lid on the weld pool, keeping nitrogen and oxygen from contaminating the weld deposit. Additionally, such slag performs another important function: for out-of-position welding such as vertical or overhead, the slag constitutes a mechanical support for the liquid weld metal, helping to shape the weld bead and hold it in place.

The second means of shielding is through gases. Such gases may be generated from fluxes contained in, on or around the electrode, or shielding gas may be delivered directly to the weld region. Suitable shielding gases include inert gases, such as argon and helium, or carbon dioxide, which is not inert but is sufficient for shielding carbon steel weld deposits. These gases displace the atmosphere, moving nitrogen and oxygen away from the region.

In summary, all of the welding processes are required to accomplish the goals of atomic closeness and atomic cleanliness. To achieve atomic closeness, heat or pressure is applied between the materials being joined. In arc welding, the electric arc generates the heat necessary for fusion. The arc welding processes achieve atomic cleanliness by means of slag and metallic elements in the electrode, which deoxidize and denitrify weld pools while shielding ingredients such as slags and gases protect the weld from the atmosphere. With this common base of all welding processes, the differentiation between the various processes is simply in the methodology by which these conditions are achieved.

2.1.2 Arc Welding as Compared to Other Welding Processes

Arc welding describes "a group of welding processes that produces coalescence of workpieces by heating them with an arc" (AWS, 2010d). Other major welding process groupings include brazing, soldering, oxyfuel gas welding, resistance welding, solid-state welding, and the catch-all category "other processes."

Brazing and soldering are characterized by processes that melt the filler metals but not the base metals. Brazing methods include "a group of welding processes that produces coalescence of materials by heating them to the brazing temperature in the presence of a filler metal having a liquidus above 450°C (840°F) and below the solidus of the base metal. The filler metal is distributed between the closely fitted faying surfaces of the joint by capillary action" (AWS, 2010d). Brazing and soldering are differentiated from each other simply by the melting point of the filler material: brazing filler metals melt at temperatures above 840°F (450°C), whereas soldering filler metals melt at temperatures lower than this limit. Neither brazing nor soldering is used for structural steel connections.

Oxyfuel gas welding (OFW) encompasses "a group of welding processes that produces coalescence of workpieces by heating them with an oxyfuel gas flame. The processes are used with or without the application of pressure and with or without filler metal" (AWS, 2010d). Years ago, gas welding was used to construct a few steel buildings, but the process was found to be too slow and too expensive to be commercially viable.

The resistance welding processes generate thermal energy by passing electrical current through the work pieces, where the interface between the two pieces constitutes a point of high electrical resistance. In addition, pressure is applied between the two work pieces. The process is usually applied to lap joints of relatively thin, clean materials, typically in the form of resistance spot welding (RSW). The longitudinal butt seam on hollow structural sections (HSS) is typically welded with the electric resistance welding process (ERW). Electroslag welding (ESW), discussed in detail in Section 2.6 of this Guide, is sometimes classified as a resistance welding process, as will be explained later.

In the remaining broad categories of solid-state welding and "other processes," there are no processes that are commonly applied to structural steel fabrication, except when ESW is placed in the "other" category. Solid-state welding

processes include exotic and interesting processes like diffusion welding, explosion welding, friction welding, ultrasonic welding, electron beam welding, laser welding, and thermite welding. Most of these processes are highly specialized and have not found commercial application in the structural steel industry.

While there are common elements among all welding processes, arc welding is differentiated from the others by the presence of the arc and the melting of both base metal and filler metals, accompanied by some form of shielding.

2.1.3 Process Issues and Concerns for the Engineer

While it is typically best to leave the process selection up to the contractor, a few points of particular importance warrant the engineer's attention. The details of these issues will be discussed under the individual processes, but the following checklist is supplied to highlight these specific points of interest.

SMAW and Low-Hydrogen Electrodes

Some electrodes for shielded metal arc welding (SMAW) are referred to as low hydrogen while others are not. Because both types of electrodes are available and because the use of electrodes that are not low hydrogen may lead to cracking, it is important to know the differences in these filler metals and where low-hydrogen electrodes are required. AWS D1.1 addresses the acceptability of these electrodes for prequalified welding procedure specifications (WPS). This topic is discussed in Section 2.2.5 of this Guide.

GMAW and Short-Circuit Transfer

The mode of transfer describes the nature of the transfer of metal from the end of the electrode to the weld pool. Multiple modes of arc transfer are possible with gas metal arc welding (GMAW). One mode is short-circuit transfer, a low-energy mode of transfer that may lead to the weld defect of incomplete fusion. This is a serious defect that behaves much like a crack. Because the same electrode, equipment, shielding gas and other factors can be used for both short-circuit transfer and other modes of transfer, it is important to understand the conditions under which short-circuit transfer may occur. AWS D1.1 does not permit the use of short-circuit transfer with prequalified WPS, although the mode may be used when the WPS is qualified by test and the welder is qualified to use this mode. This topic is discussed in Section 2.5.6 of this Guide.

SAW and Active Fluxes

Submerged arc welding (SAW) can be performed using neutral or active fluxes. Improperly used, active fluxes can lead to a buildup of alloy within the weld deposit, resulting in high-strength, low-ductility weld metal. However, active fluxes offer specific advantages in other situations. It is important to understand how and where active fluxes should be used and where they should not be used. This topic is discussed in Section 2.4.3 of this Guide.

FCAW and Single-Pass/Limited-Thickness Electrodes

Certain flux-cored arc welding (FCAW) electrodes are intended to be used for making single-pass welds. When misapplied and used in multiple-pass applications, such electrodes may induce cracking. AWS D1.1 precludes the use of these electrodes for prequalified WPS. This topic is discussed in Section 2.3.4 of this Guide.

ESW and EGW

Electroslag welding (ESW) and electrogas welding (EGW) are high-deposition-rate, high-energy-input, vertical-up welding processes. The very high heat input results in very slow cooling rates for the weld and heat affected zone, and these regions may have impaired fracture toughness or reduced strength. The potential negative effect of high heat input is of particular concern when ESW and EGW are used on other than hot-rolled steels. AWS D1.1 precludes the use of ESW and EGW for prequalified WPS, although these processes may be used with qualified WPS. This topic is discussed in Section 2.6 of this Guide.

Welding processes fit into three broad categories of coverage in AWS D1.1: (1) processes that are prequalified, (2) processes that are code approved, and (3) other processes. The prequalified processes are those that may be used with a prequalified WPS—that is, a WPS that conforms to all the requirements for prequalification and is not subject to qualification testing. Code-approved processes are those that are recognized by the code and for which the code has specific requirements, but the use of such processes requires that the WPS be qualified by test; code approved processes include gas tungsten arc welding (GTAW), ESW, and EGW. Finally, processes in the other category are those that also use a WPS that is qualified by test but for which the code does not provide specific testing criteria. The engineer must evaluate the suitability of such processes and testing methodologies. WPS are extensively discussed in Chapter 8 of this Guide.

The following discussion of the processes will note the category in which AWS D1.1 places each process.

2.2 SMAW

2.2.1 Fundamentals

Shielded metal arc welding (SMAW) is "an arc welding process with an arc between a covered electrode and the weld pool. The process is used with shielding from the decomposition of the electrode covering, without the application

of pressure and with filler metal from the electrode" (AWS, 2010d). The process is illustrated in Figure 2-1. SMAW is commonly known as "stick" welding or manual welding. Metal from the metallic core of the electrode is melted and becomes part of the deposited weld as shown in Figure 2-2.

SMAW is the successor to bare metal arc welding, which relied only on a light coating on the electrode and was essentially unshielded. With the addition of the flux coating on the electrode, weld quality was significantly enhanced.

SMAW is characterized by versatility, simplicity and flexibility. In the 1940s, 1950s and 1960s, SMAW was commonly used for field erection of steel buildings, as well as for shop fabrication that could not be done with submerged arc welding. The advent of flux-cored arc welding in the 1960s, however, displaced much of the SMAW in both the shop and field.

In terms of structural steel fabrication in 2017, SMAW is commonly used for tack welding, fabricating miscellaneous components, and repair welding. SMAW has earned a reputation for dependably depositing high-quality welds. It is, however, slower and more costly than other methods of welding. In order to obtain quality welds, more welder skill is typically required for SMAW as compared to the semi-automatic processes.

SMAW is one of the prequalified processes listed in AWS D1.1, and the WPS used with this process can be prequalified, providing all the criteria of AWS D1.1, clause 3, are met.

2.2.2 Equipment

SMAW welding is performed using a power supply with constant current (CC) output as shown in Figure 2-3. Formerly, constant current was known as variable voltage (VV). Either alternating current (AC) or direct current (DC) may be used for SMAW. If primary electrical power is available, a transformer for AC output or a transformer/rectifier for DC output is used to convert the high-voltage alternating current into high-amperage output suitable for welding. Small, lightweight, and highly portable inverter power supplies can perform this function more efficiently, thereby reducing operating costs. When primary power is not available, the same type of equipment may be powered by portable power

Fig. 2-1. MAW application.

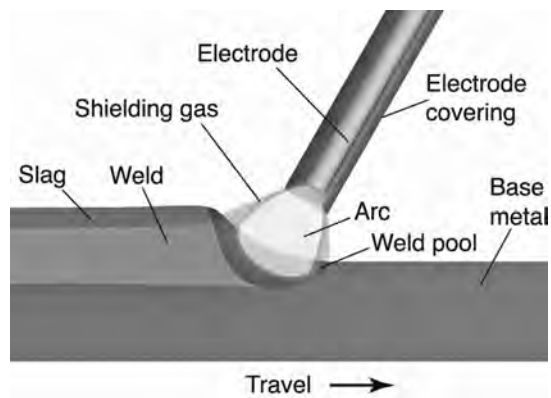

Fig. 2-2. SMAW process.

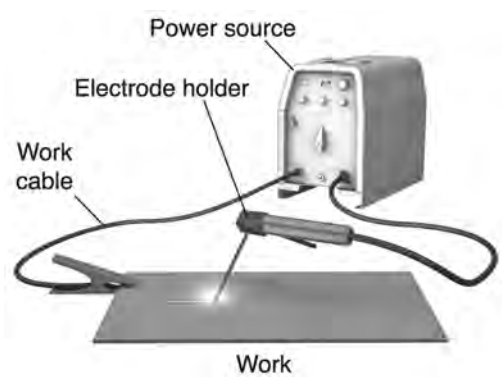

Fig. 2-3. Typical SMAW welding circuit.

generation systems. Alternatively, individual engine-driven welders fueled by gasoline, diesel or propane can be used to generate the necessary welding power directly as shown in Figure 2-4.

2.2.3 Consumables

Electrodes for SMAW consist of a solid core wire surrounded by a coating of material called flux. The core wire is essentially the same for all electrode classifications, with the coating providing alloys that result in different strength properties for the weld metal. Coating materials vary in composition, but the primary purpose of all of them is to shield the molten weld metal from the atmosphere. After this function is complete, the decomposed coatings form a slag coating that covers the final weld. The slag is removed after welding. One end of the electrode has no coating; this is the grip end where the exposed core wire is inserted into the electrode holder.

The nominal size of the electrode is based upon the diameter of the core wire. Electrodes range in size from ⅛ to 3⁄16 in. (3 to 5 mm) for most structural work, although smaller and larger sizes are available. Larger electrodes can carry more welding current and thus melt faster, yielding higher production rates. The as-received lengths of the electrodes vary with the diameter; an electrode that is 14 to 18 in. (350 to 450 mm) long is typical, as shown in Figure 2-5.

The American Welding Society (AWS) publishes a variety of filler metal specifications under the jurisdiction of the A5 Committee; the filler metal specification AWS A5.1/A5.1M (AWS, 2012b) addresses the particular requirements for carbon steel covered electrodes used with the shielded metal arc welding process, while AWS A5.5/A5.5M (AWS, 2014b) similarly covers the low-alloy electrodes. These specifications outline the required mechanical properties and chemical compositions of welds deposited by various filler metal classifications.

All AWS A5.1 electrodes produce weld deposits with either 60- or 70-ksi (410 or 480 MPa) specified minimum tensile strength, while AWS A5.5 low-alloy electrodes will give deposits with specified minimum tensile strengths from 70 to 120 ksi (480 to 830 MPa). Because most structural steel applications involve materials like ASTM A992, A36, A572 Grade 50, A500, and A1085, SMAW electrodes for such applications will likely be carbon steel electrodes governed by AWS A5.1. When higher-strength welds are required because higher-strength steels like ASTM A514 or A517 are used, AWS A5.5 electrodes will likely be used. For weathering steels such as ASTM A588, and when the weld deposit is required to have similar atmospheric corrosion resistance, the alloy electrode is governed by AWS A5.5.

2.2.4 Electrode Classification

AWS A5.1 and AWS A5.5 both contain classification systems for identifying the various types of SMAW electrodes. The AWS A5.1 methodology consists of the letter "E" followed by four digits as shown in Figure 2-6.

Using an E7018 electrode as an example, the "E" represents "Electrode"; the specified minimum tensile strength is 70 ksi; the "1" indicates that the electrode can be used in

Fig. 2-4. Engine-powered welding machine.

Fig. 2-5. SMAW electrodes.

all positions; and the "8" indicates this electrode has a low-hydrogen coating, it operates on DC with the electrode connected to the positive side of the circuit (i.e., DC+) or AC, and the deposited weld metal can deliver a specified minimum Charpy V-notch (CVN) energy of 20 ft-lb at –20°F (27 J at –29°C).

Electrodes classified under the metric system simply replace the strength designation with units of MPa. For example, E7018 is classified as E4918, where the "49" stands for 490 MPa.

Under the low-alloy specification, AWS A5.5, a similar format is used to identify the various electrodes. The most significant difference, however, is the inclusion of a suffix letter and number indicating the alloy content. An example is an "E8018-C3" electrode, with the suffix "-C3" indicating the electrode nominally contains 1% nickel.

There are a variety of other suffixes that may be applied to either AWS A5.1 or AWS A5.5 SMAW electrodes. These suffixes address issues such as specific military classifications, extra CVN toughness capabilities, and the maximum diffusible hydrogen content of the deposited weld metal. These designations may be of great importance to the contractor but are typically not important to the structural engineer for whom this Guide has been prepared. Further detail on these suffixes, as well as other details regarding the electrode classification system, can be obtained from the filler metal specifications themselves or from other sources listed in the References.

2.2.5 Low-Hydrogen and Non-Low-Hydrogen SMAW Electrodes

The AWS A5.1 and AWS A5.5 classifications address filler metals with low-hydrogen coatings, as well as electrodes that do not have such coatings. Low-hydrogen coatings are specially formulated to have very low levels of moisture, resulting in weld deposits that will be low in diffusible hydrogen.

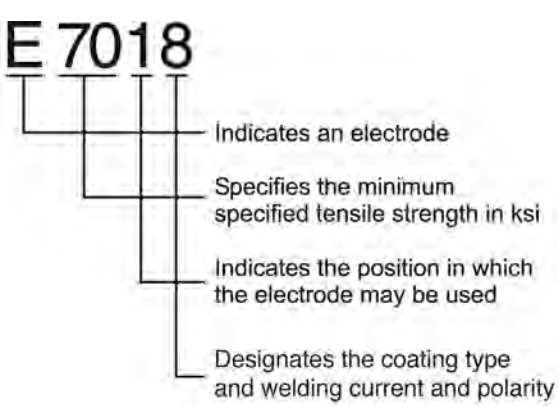

Fig. 2-6. SMAW electrode classification system.

This in turn results in welds and heat affected zones that are more resistant to hydrogen-assisted cracking (see Chapter 6 of this Guide).

The use of low-hydrogen electrodes is not always required. Hydrogen-assisted cracking is typically not anticipated when welding on lower strength steels and on steels with lower levels of hardenability. The potential for hydrogen-assisted cracking can be reduced by the use of higher preheat levels even when welding with electrodes that deposit welds with relatively high levels of diffusible hydrogen.

Where the use of non-low-hydrogen electrodes is acceptable, these electrodes offer certain advantages, such as a greater ability to weld on contaminated materials and handle poor fit-up conditions. The root passes on pipeline applications have traditionally been made with non-low-hydrogen electrodes due to their ability to deposit quality welds in open root joints; the same electrodes may be the contractor's choice for welding HSS. Deck welding is often done with specialized electrodes that are ideal for making puddle welds (i.e., arc spot welds), but such electrodes are not low hydrogen (see Section 14.13 of this Guide). AWS D1.1 permits the use of non-low-hydrogen electrodes under some conditions while AWS D1.5 mandates the use of electrodes with low-hydrogen coatings when SMAW is used.

When welding on steels with specified minimum yield strengths of 50 ksi (350 MPa) or more, AWS D1.1, Table 3.2, requires for prequalified welding procedure specifications (WPS) that all SMAW electrodes be of the low-hydrogen type. Given that ASTM A992/A992M is standard for W-shapes in 2017, SMAW electrodes with low-hydrogen coatings are generally required. When welding on steels where either non-low-hydrogen electrodes or low-hydrogen electrodes are permitted, the use of low-hydrogen electrodes may reduce the required level of preheat, offering economic advantages (see AWS D1.1, Table 3.3).

Table 2-1 summarizes the various SMAW electrodes with respect to the coating types.

For AWS A5.5 filler metals as shown in Table 2-1, the suffix "X" in the designator represents the alloy composition of the deposit. It consists of a letter or two, followed by a number. Table 2-2 summarizes these alloy groups.

In general, welds on structural steel applications are left in the as-welded condition and not subject to post-weld heat treatment (PWHT). Accordingly, electrodes classified in the PWHT condition typically should not be used for as-welded applications unless there is test data to support their use in this condition.

2.2.6 Care and Storage of Low-Hydrogen Electrodes

Low-hydrogen electrodes must be dry if they are to perform properly. Manufacturers in the United States typically supply low-hydrogen electrodes in hermetically sealed cans as shown in Figure 2-7. When electrodes are so supplied, they

Table 2-1. SMAW Electrodes with Respect to Coating Types		
Filler Metal Specification	**Non-Low-Hydrogen Coatings**	**Low-Hydrogen Coatings**
AWS A5.1:2012	E6010, E6011, E6012, E6013, E6019, E6020, E6022, E6027, E7014, E7024, E7027	E6018, E7015, E7016, E7018, E7028, E7048
AWS A5.5:2014[a]	EXX10-X, EXX11-X, EXX13-X, EXX20-X, EXX27-X,	EXX15-X, EXX16-X, EXX18-X

[a] The first "XX" in these abbreviated electrode classifications is the strength designator, which may be 70, 80, 90, 100, 110 or 120, and corresponds to a specified minimum tensile strength of the deposited weld, in ksi.

Table 2-2. Summary of Alloy Groups		
Alloy Designator	**Alloy System**	**Classification Condition**
A1	Carbon-molybdenum steel	Post-weld heat treated
B1, B2, B2L, B3, B3L, B4L, B5, B6L, B7, B7L, B8, B8L, B9	Chromium-molybdenum steel	Post-weld heat treated
C1, C1L, C2, C2L, C5L	Nickel steel	Post-weld heat treated
C3, C3L, C4	Nickel steel	As-welded
MN1	Nickel-molybdenum steel	As-welded
D1, D2, D3	Manganese-molybdenum steel	Post-weld heat treated
G	General low-alloy steel	As-welded or post-weld heat treated
M	Military-similar electrodes	As-welded
P1	Pipeline electrodes	As-welded
W1, W2	Weathering steel electrodes	As-welded

may be used without any preconditioning; that is, they need not be baked before use. Electrodes in unopened, hermetically sealed containers should remain dry for extended periods of time under good storage conditions. Once electrodes are removed from the hermetically sealed container, they should be placed in a holding oven to minimize or preclude the pick-up of moisture from the atmosphere as shown in Figure 2-8. These holding ovens generally are electrically heated devices that can accommodate several hundred pounds (kilograms) of electrodes. They hold the electrodes at temperatures of approximately 250 to 300°F (120 to 150°C).

Electrodes used in fabrication are taken from these ovens. Fabricators and erectors should establish a practice of limiting the number of electrodes distributed at any given time. Supplying welders with electrodes two times per shift (e.g., at the start of the shift and after lunch) minimizes the risk of moisture contamination. However, the optional designator "R" indicates a low-hydrogen electrode that has been tested to determine the moisture content of the covering after exposure to a moist environment for 9 hours and has met the maximum level permitted in AWS A5.1. The "R" designated electrodes can be issued once per shift, a convenient method of control. Unused electrodes must be returned to the heated cabinet for overnight storage.

Once the electrode is exposed to the atmosphere, it begins to pick up moisture. AWS D1.1 limits the total exposure time as a function of the electrode type. Higher-strength electrodes are subject to more restrictive requirements because the hydrogen-related cracking concerns are typically greater when such electrodes are used.

Some SMAW electrodes with low-hydrogen coverings are supplied in cardboard containers. This is not commonly done for structural fabrication, although the practice can be acceptable if specific and appropriate guidelines are followed. The electrodes should be preconditioned before welding. Usually, this means baking them at temperatures in the 700 to 900°F (400 to 700°C) range to reduce moisture. In all cases, the electrode manufacturer's guidelines should be followed to ensure a baking procedure that effectively reduces moisture without damaging the covering. Electrodes removed from damaged, hermetically sealed cans should be similarly baked at high temperature. The manufacturer's guidelines must be followed to ensure that the electrodes are properly conditioned.

Fig. 2-7. SMAW hermetically sealed cans.

Fig. 2-8. Electrode holding oven.

2.2.7 SMAW Advantages and Limitations

SMAW continues to be a viable process, despite some inherent disadvantages. The chief advantages of the process are its simplicity, flexibility and familiarity. In addition to standard safety equipment, all that is required to weld with SMAW is a power source, work cable and clamp, an electrode cable and holder, and an electrode. It is the simplest of all the arc welding processes. By just exchanging the electrode, it is possible to change from welding carbon steel to welding stainless steel. By changing the electrode and machine setting, it is possible to go from a high-deposition-rate, high-amperage, flat-position welding procedure to an overhead alternative. Finally, nearly all welders are initially trained using SMAW, and therefore among structural steel welders, it is the exception to find personnel who have no experience with SMAW.

The chief limitations of SMAW rest in the nature of the electrode, which has two inherent disadvantages. First, the electrode is a "variable resistor"—that is, its electrical resistance continuously changes as it is consumed. Before the arc is struck, the electrode is physically cold and long and has a given electrical resistance. As soon as the arc is struck, the electrode begins to heat as a result of the electrical resistance. This increases the resistance to current flow, but as the electrode is consumed, the length decreases, offsetting some of the increased resistivity of the heated electrode.

When too much current (amperage) is passed through the variable resistor, the electrical resistivity of the electrode increases much faster than the reduction in the length. This leads to overheating the electrode, which damages the electrode coating and may affect the quality of the deposited weld. For this reason, the welding current must be limited for a given size and type of electrode. Higher currents generally mean higher rates of productivity, and so the limitation on suitable current levels for SMAW electrodes restricts productivity.

The second limitation of SMAW is that the electrode is of a finite length, and when it is consumed, the remaining electrode (called a stub) must be removed from the holder, discarded, and a new electrode inserted. This has several consequences. First, the welder must stop welding, interrupting productivity. When this occurs in the middle of a weld, an otherwise unnecessary stop/start is created. Finally, because the stubs cannot be consumed, the process is less efficient in the use of purchased electrodes. Out of 100 lb (45 kg) of purchased electrode, approximately 20 lb (9 kg) of stubs will be created when following the good practice of welding down to only 2 in. (50 mm) stubs.

2.2.8 Applications

SMAW is seldom used for the primary shop fabrication or field erection of buildings due to its lower productivity. However, because of its simplicity, it is used where access to equipment is limited or when transporting and positioning of equipment would be a major task as shown in Figure 2-9. A prime example is tack welding—moving equipment around a structural component may take more time than making the tack welds. Thus, SMAW is often used for this purpose. Portability makes SMAW ideal for applications such as welding sheet steel decks to supporting members (see Section 14.13 of this Guide for details on deck welding).

The flexibility of SMAW may make it the contractor's process of choice where a whole range of welds must be made. This is often the case for smaller field erection projects where a limited number of welders may be used to make a variety of welds. Repair welds are often made with SMAW, again due in part to its flexibility.

The chief disadvantage of SMAW lies in its inherently lower productivity rate and thus it is not typically used for large, long welds, which are better performed with more automated welding processes.

2.3 FCAW

2.3.1 Fundamentals

Flux-cored arc welding (FCAW) is "an arc welding process using an arc between a continuous filler metal electrode and the weld pool. The process is used with shielding gas from a flux contained within the tubular electrode, with or without additional shielding from externally supplied gas, and without the application of pressure" (AWS, 2010d). Inside the tubular electrode is a combination of materials that include flux and perhaps metal powders. The flux ingredients inside the electrode perform the same function as the flux on the outside of an SMAW electrode and eventually form an extensive slag cover over the weld bead. FCAW electrodes are said to be "continuous." In reality, they have a finite length, but because these wire electrodes are spooled onto packages that may consist of anywhere from 1 to 1,000 lb (0.5 to 500 kg) of material, they are virtually continuous in comparison to SMAW electrodes.

FCAW may be applied automatically or semiautomatically, although most FCAW is done semiautomatically. In semiautomatic welding, the welder holds the gun and controls travel speed, whereas in automatic welding, these functions are mechanically controlled. With SMAW, the welder must maintain the arc length (the gap between the electrode and the workpiece), while manually feeding the electrode into the puddle and advancing the electrode along the joint. With automatic and semiautomatic processes such as FCAW, the operator does not need to maintain the arc length or feed the electrode into the puddle. The power supply maintains the arc length and the wire feeder delivers the electrode to the arc. In automatic welding, the travel speed is regulated by a mechanism that advances the electrode along the joint.

Within the category of flux-cored arc welding, there are two specific subsets: gas-shielded flux core (FCAW-G) as shown in Figure 2-10 and self-shielded flux core (FCAW-S) as shown in Figure 2-11. Self-shielded flux-cored electrodes require no external shielding gas; the entire shielding system results from the flux ingredients contained within the core of the tubular electrode. The gas-shielded versions of flux-cored electrodes utilize an externally supplied shielding gas. Self-shielded flux-cored electrodes are better suited for field welding situations where wind may displace the shielding gas required for FCAW-G. The FCAW-G process tends to be more operator friendly and is generally preferred in situations where the gas shielding can be protected from disruption.

FCAW, in both gas-shielded and self-shielded versions, was initially developed in the 1950s, and became a commercial reality in the 1960s. FCAW is one of the prequalified processes listed in AWS D1.1, and the WPS used with this process can be prequalified, provided that all of the criteria of AWS D1.1, clause 3 are met.

2.3.2 Equipment

FCAW requires a power supply, a wire feeder, a gun and cable system, a work lead and clamp, and a power lead that runs from the power source to the wire feeder. As compared to SMAW, the additional equipment includes the wire feeder, and the gun and cable assembly as shown in Figure 2-12. For FCAW-G, some type of shielding gas regulator and flow meter, as well as hoses, are also required.

FCAW is typically and optimally performed using a constant voltage (CV) power supply formerly called constant potential (CP). When a CV system is used, the electrode is delivered to the puddle at a rate fixed by the wire feeder; the power supply responds by delivering the required current necessary to maintain the voltage setting. Thus, these systems are called "constant voltage" systems, even though some variation in voltage occurs. In a CV system, when the electrode extension is lengthened, the welding current will decrease but the voltage remains relatively constant.

FCAW can also be performed with a CC system. When a CC system is used, the speed of the electrode delivery is adjusted by the wire feeder so that a constant current (amperage) is maintained. Just as the voltage is not truly constant in a CV system, so the current is not truly constant in a CC system. Some contractors may choose to use CC for FCAW when they convert from SMAW to FCAW, desiring to continue to use their existing SMAW power supplies. This is often the case for contractors with engine driven welding equipment which is relatively expensive to replace.

As was stated, FCAW is optimally performed with CV

Fig. 2-9. SMAW applications.

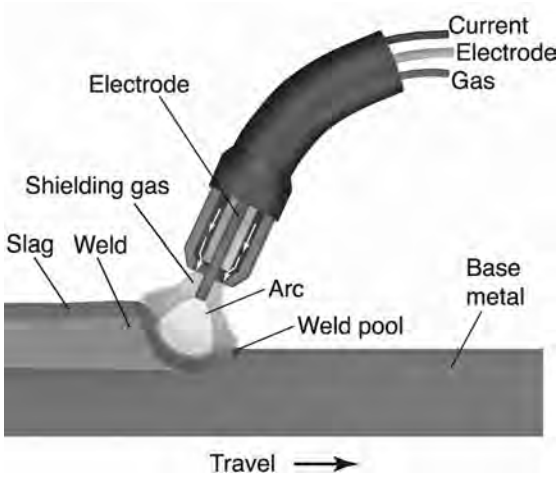

Fig. 2-10. Gas-shielded FCAW process.

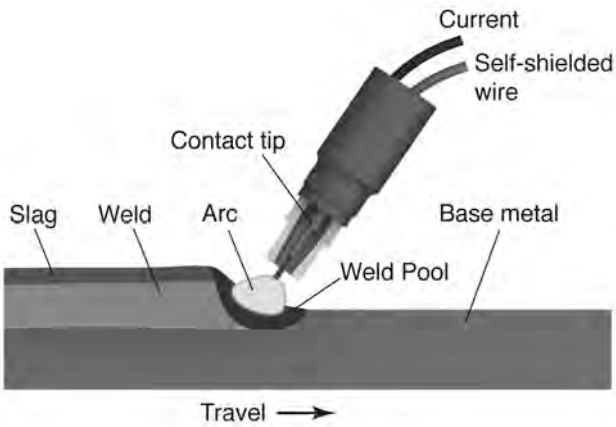

Fig. 2-11. Self-shielded FCAW process.

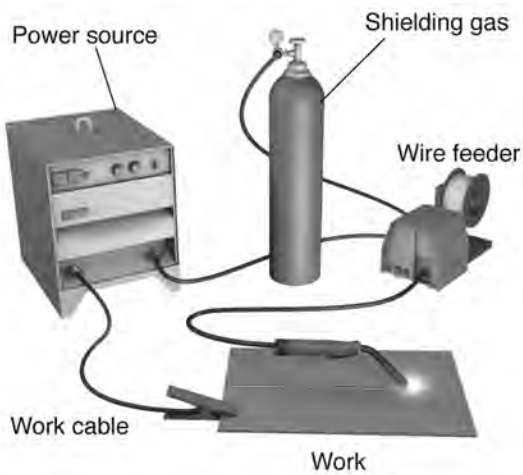

Fig. 2-12. FCAW-G equipment.

systems although, acceptable results can be obtained on CC systems. Unfortunately, the results are dependent not only on the specific CC output characteristics of the power supply, but also on the specific electrode used. To control this condition, AWS D1.1 requires CV output for prequalified WPS but permits CC output for FCAW when the WPS is qualified by test. FCAW-G welding is typically less sensitive to the CV versus CC issue than are FCAW-S electrodes.

The wire feeder mechanically drives the coiled electrode through the gun and cable system. Typically, when the welder depresses the switch on the gun, simultaneously the wire feeder delivers the electrode, the gas shielding (when required) begins to flow, and the power source output is energized. Some power supplies are electrically hot at all times. When this is the case, the electrode is hot all the time, as are the various parts of the gun and cable assembly. Some wire feeders are small, lightweight and compact units that can be moved from one location to another, while others are larger and more likely to be part of a welding station. Gun cable assemblies are typically 10 to 15 ft (3 to 5 m) long, allowing for some movement of the gun from the wire feeder.

2.3.3 Consumables

FCAW filler metals are always tubular, with a metallic tube that surrounds the internal flux. The diameter of such electrodes ranges from 0.030 to ⅛ in. (0.8 to 3.2 mm), with 0.045 to 3⁄32 in. (1.2 to 2.4 mm) being typical for structural steel work. Electrodes that are 5⁄64 in. (2.0 mm) and smaller are often used for out-of-position work (i.e., vertical and overhead), while those that are 1⁄16 in. (1.6 mm) and larger are generally used for flat and horizontal welds.

The various electrodes are wound on spools, coils or reels or are inserted into drums. Ranging in available strength from 1 to 1,000 lb (0.5 to 500 kg) or more, the package size is typically dictated by the balance between the need for portability and a desire to limit the number of electrode changes as shown in Figure 2-13.

For FCAW-G, an additional consumable is the shielding gas. Most of the gas-shielded flux-cored electrodes utilize carbon dioxide or argon-CO_2 mixtures for the shielding media. The shielding gas may affect mechanical properties, including yield and tensile strength, elongation, and CVN toughness. This is largely due to the difference in alloy recovery—that is, the amount of alloy transferred from the filler material to the weld deposit. The shielding gas selected should be that required of the filler metal classification, or supported by the filler metal manufacturer's recommendations or suitable test data.

2.3.4 Electrode Classification

AWS A5.20/A5.20M (AWS, 2005b), AWS A5.29/A5.29M (AWS, 2010c), and AWS A5.36/A5.36M (AWS, 2012c)

specify the requirements for flux-cored arc welding filler metals. The AWS A5.20/A5.20M and AWS A5.29/A5.29M specifications have existed for many years, whereas AWS A5.36/A5.36M was introduced in 2012. AWS A5.20/A5.20M covers carbon steel electrodes, AWS A5.29/A5.29M addresses low-alloy steel materials, and AWS A5.36/A5.36M deals with both carbon steel and low-alloy steel FCAW electrodes.

AWS A5.36/A5.36M has combined provisions for electrodes that are classified under A5.20/A5.20M and A5.29/A5.29M into one specification. AWS A5.36/A5.36M also includes requirements for composite (metal-cored) electrodes that are classified under A5.18/A5.18M (AWS, 2005a) and A5.28/A5.28M (AWS, 2005c). Accordingly, A5.36/A5.36M covers tubular electrodes, both flux-cored and metal-cored, for both carbon steel and alloy steel applications.

AWS A5.36/A5.36M uses two classification systems: a fixed classification and an open classification system. The fixed classification designation and requirements are no different from those specified in A5.20/A5.20M and A5.29/A5.29M; each electrode has a fixed set of requirements with a fixed designation. AWS A5.36/A5.36M, Table 1, lists these electrodes.

The open classification system uses separate designators for usability, welding position, tensile strength, impact strength, shielding gas, heat treatment condition, and deposit composition. For gas-shielded processes, more classification options are available. The Foreword in AWS A5.36/A5.36M explains the changes in greater detail as does the Commentary to AWS D1.1/D1.1M. The additional flexibility permitted by the open classification system permits a better description of the characteristics of the filler metal, albeit with a more complicated method for designating the electrode.

To assist in the transition from the older filler metal specifications to the new A5.36/A5.36M, filler metals are expected to carry classifications that show conformance to the traditional specifications, as well as to the new A5.36/A5.36M specification. For the same reason, the traditional specifications were not made obsolete when A5.36/A5.36M was introduced; they will be concurrently maintained for some time to aid in the transition to the newer specification.

To explain how AWS A5.20/A5.20M classifies electrodes, the example shown in Figure 2-14 will be used. For the classification E71T-1C, the "7" conveys the same information as does the "70" for the SMAW of E7018; the specified minimum tensile strength of welds made with the filler metal under prescribed conditions is 70 ksi (480 MPa). The "1" also means the same thing for both classifications—the electrode is suitable for use in all positions. However, for FCAW, a "0" at this location indicates the suitability of the electrode for welding in the flat and horizontal position only. Note that this differs from SMAW for which flat and horizontal position electrodes are designated by replacing the "1" with a "2" instead. Like the "8" in the SMAW example, the final "1" in the E71T-1 example conveys a variety of information: the electrode is for FCAW-G (gas-shielded), operates on direct current with positive polarity (DC+), has a rutile slag system, is suitable for single- and multiple-pass welds, and must be capable of depositing weld metal with a minimum CVN toughness of 20 ft-lb at 0°F (27 J at −18°C). The "C" in the example indicates that carbon dioxide (CO_2) shielding gas is used for the classification of this electrode. An "M" in this location would indicate the use of a mixed shielding gas (argon/CO_2).

Under AWS A5.29 for low-alloy electrodes, a suffix letter

Fig. 2-13. FCAW electrode packaging.

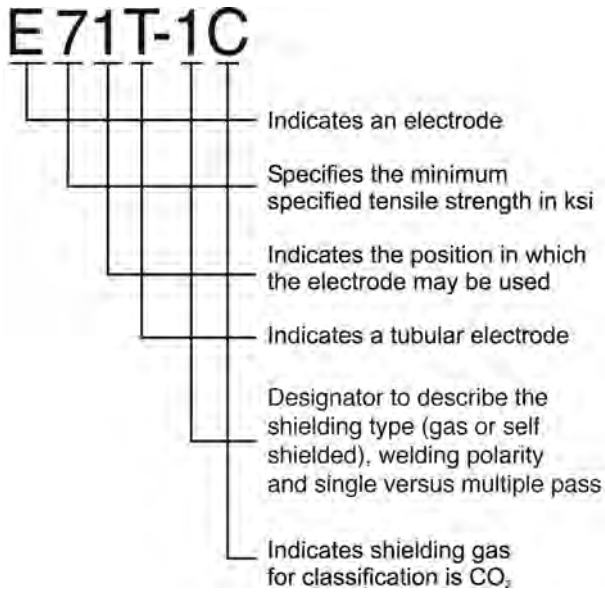

Fig. 2-14. FCAW electrode classification system.

Table 2-3. Summary Data from AWS A5.20:2005				
Filler Metal Specification	**Electrode Classification**	**Gas-Shielded or Self-Shielded**	**Single or Multiple Pass**	**Specified Minimum CVN Properties[c]**
AWS A5.20:2005	E7XT-1X	Gas-shielded	Multiple pass	20 ft-lb @ 0°F
	E7XT-2X	Gas-shielded	Single pass	Not specified
	E70T-3	Self-shielded	Single pass	Not specified
	E70T-4	Self-shielded	Multiple pass	Not specified
	E7XT-5X	Gas-shielded	Multiple pass	20 ft-lb @ –20°F
	E70T-6	Self-shielded	Multiple pass	20 ft-lb @ –20°F
	E7XT-7	Self-shielded	Multiple pass	Not specified
	E7XT-8	Self-shielded	Multiple pass	20 ft-lb @ –20°F
	E7XT-9X	Gas-shielded	Multiple pass	20 ft-lb @ –20°F
	E70T-10	Self-shielded	Single pass	Not specified
	E7XT-11	Self-shielded	Multiple pass[a]	Not specified
	E7XT-12X	Gas-shielded	Multiple pass	20 ft-lb @ –20°F
	E6XT-13, E7XT-13	Self-shielded	Single pass	Not specified
	E7XT-14	Self-shielded	Single pass	Not specified
	E6XT-G E7XT-G	Not specified[b]	Multiple pass	Not specified[b]
	E6XT-GS E7XT-GS	Not specified[b]	Single pass	Not specified[b]

[a] The E7XT-11 electrodes can be used for multiple-pass welding, but are generally not recommended on thicknesses greater than ¾ in. (20 mm) thick. The use of prequalified WPS with this electrode is limited to applications involving materials ½ in. (12 mm) thick and thinner (see AWS D1.1, Table 3.2).

[b] The general classification categories are typically used for new filler metals for which a classification number has not been assigned. The characteristics of such electrodes and the properties of the deposited weld metal (other than yield, tensile and elongation) are as agreed upon by the supplier and purchaser. The electrodes could be gas or self-shielded and may or may not have specified minimum CVN properties.

[c] 20 ft-lb @ –20°F (27 J @ –29°C) and 20 ft-lb @ 0°F (27 J @ –18°C)

followed by a number appears at the end. Common designations include "Ni1" indicating a nominal nickel content in the deposited metal of 1%. Other suffix designators may be used that indicate diffusible hydrogen limits.

Some of the electrodes listed in AWS A5.20 and AWS A5.29 have specified minimum notch toughness values, although some do not. Some AWS A5.20 electrodes are restricted to single-pass applications, and others have restrictions on the thickness for their application. All AWS A5.29/A5.29M electrodes are suitable for multiple-pass applications. AWS D1.1, Table 3.2, lists the prequalified filler metals that are suitable for structural applications.

Table 2-3 summarizes data from AWS A5.20/A5.20M.

Electrodes shown with a grey background in Table 2-3 are specifically listed in AWS D1.1 as not prequalified because they are designed for single-pass applications.

FCAW electrodes may contain a "-D" suffix in the classification. Such electrodes are required to additionally demonstrate the ability to deposit weld metal with a minimum CVN toughness of 40 ft-lb at +70°F (54 J at +20°C) when tested with both high- and low-heat input procedures. These CVN requirements are often required of projects designed according to the AISC *Seismic Provisions*.

2.3.5 FCAW Advantages and Limitations

The flux-cored arc welding process offers two distinct advantages over shielded metal arc welding. First, the electrode is continuous, eliminating the built-in starts and stops that are inevitable with shielded metal arc welding. Not only does this have an economic advantage because the welder can continue welding until the weld is complete, but arc starts and stops, which create potential sources of weld discontinuities, are reduced.

The second advantage is that increased amperages can be used with flux-cored arc welding, with a corresponding increase in deposition rate and productivity. While the gun cable assembly may be 10 or more feet long (3 m or more), the electrical power is delivered to the tubular electrode near the point where it exits the gun. As the electrode passes

through a hollow copper tube, called a contact tip, the electrical energy is transferred to the electrode; then current is transferred through the electrode until it gets to the arc.

The short distance from the contact tip to the arc is known as the electrode extension or stickout and is typically ¾ in. to 1⅛ in. (20 to 30 mm), although it may be as large as 2 or 3 in. (50 or 75 mm). Given that this distance is small, and that the electrode is typically fed through the contact tip at a rate of 200 in. per minute (5 m per minute) or more, there is little time for the electrode to overheat.

The higher permissible amperages allow for higher deposition rates—that is, more pounds of metal can be deposited in a given length of time. Additionally, because the electrode is continuous, the arc can stay lit longer because there is no interruption to change electrodes. Combined, these two features make FCAW much more economical to use as compared to SMAW.

Because FCAW is semiautomatic, welders do not need to maintain the arc length because it is controlled by the machine. However, the welder must maintain the electrode extension or stickout distance. The welder does not need to feed the filler metal into the joint—that is done by the wire feeder. Unlike the variable resistor associated with SMAW, FCAW has a fixed resistance for a given electrode extension, and thus more uniform welding conditions are maintained. In some ways, less welder skill is required for FCAW welding. However, because of the higher deposition rates involved, FCAW welders must learn how to control the larger volumes of molten metal that are common in this process.

FCAW welding equipment costs more and is less portable than SMAW equipment. Guns and cables are more costly to buy and maintain than are the simple electrode holders used for SMAW. To change from one size of electrode to another, the welder must change the coil or spool of electrode, perhaps change the drive rolls in the wire feeder, and make changes to the gun and cable assembly. Thus, as compared to SMAW, such changes are more complicated.

2.3.6 FCAW-G Advantages and Limitations

Comparing FCAW-G and FCAW-S, individual gas-shielded flux-cored electrodes tend to be more versatile than self-shielded flux-cored electrodes and, in general, provide better arc action. Operator appeal is usually higher. While the gas shield must be protected from winds and drafts, this is not particularly difficult in enclosed shop fabrication situations. Weld appearance and quality are very good. Higher-strength gas-shielded FCAW electrodes are available, while the technology in 2017 limits self-shielded FCAW deposits to 90-ksi (620 MPa) tensile strength or less.

For structural applications, the primary limitations of FCAW-G are related to the need for shielding gas. AWS D1.1 limits the maximum wind velocity around an arc to 5 mph (8 km/h). A shelter or screen can be erected to limit such wind, if necessary. However, when welding is performed under windy conditions with FCAW-G, porosity is a likely result. Additionally, studies have shown that at wind speeds less than 5 mph, and before the onset of porosity, the mechanical properties of ductility and toughness may decrease (FEMA, 1997). Thus, AWS D1.8 has limited the maximum wind velocity to 3 mph (5 km/h) for gas-shielded processes.

2.3.7 FCAW-G Applications

The flux-cored arc welding process has become one of the most popular semiautomatic processes for structural steel shop fabrication. Production welds that change direction or are short, difficult to access, done out-of-position (i.e., vertical or overhead), or part of a short production run will generally be made with semiautomatic FCAW. Stiffeners and doubler plates, angles, brackets, and clips are routinely welded with FCAW-G.

2.3.8 FCAW-S Advantages and Limitations

For welding under field conditions where wind may disturb the gas shield, FCAW-S is ideal. Welds have been made under conditions simulating wind speeds of 10 mph (16 km/h) without any harmful effects (FEMA, 1997). Some fabricators have found FCAW-S offers advantages for shop welding as well, particularly for relatively open fabrication shops (open shop doors, buildings without walls, etc.).

Because no external shielding gas is required, there is no need for gas cylinders, hoses and regulators and no need to move them around a shop or jobsite. Gas nozzles associated with FCAW-G can become plugged with welding spatter, while this is of no concern for FCAW-S. The gun and cable assembly is simpler and less obstructive for FCAW-S, making it more suitable for welding in some confined spaces.

2.3.9 FCAW-S Applications

Field erection of all kinds of building components is the domain of FCAW-S—moment connections, column splices, braces, and truss components are typical applications as shown in Figure 2-15. Because of the compact size of FCAW-S guns, many T-K-Y connections in HSS construction are welded with FCAW-S.

2.3.10 FCAW-S Intermix Concerns

Different welding processes may be combined in a single joint for a variety of reasons. For example, tack welding may be done with SMAW, and the rest of the joint may be filled with FCAW. Under most circumstances, such intermixing of processes causes no difficulty. However, FCAW-S poses a specific exception.

For most arc welding processes, the molten weld pool is shielded by shielding gas, slag, or a combination of the two.

FCAW-S is different in that it produces very little shielding gas but, rather, relies on the addition of large amounts of deoxidizers and denitrifiers to react with oxygen and nitrogen. Aluminum is the primary element used for this purpose, but titanium and zirconium may also be used.

The balance between aluminum and nitrogen, as well as carbon and other alloys, must be properly maintained to ensure that specified mechanical properties are obtained in the weld metal. Mixing welding consumables that derive their properties from different metallurgical mechanisms and alloy balances in a single joint creates the potential for negative interaction. While it has been shown that the effects on yield strength, tensile strength and elongation are minor, CVN toughness may be significantly affected (FEMA, 1997; Quintana, 1998).

When CVN toughness is specified and mixed weld metal is used, AISC *Specification* Section J2.7 requires that the combination be compatible. AWS D1.8 contains Annex B, entitled "Intermix CVN Testing of Filler Metal Combinations (where one of the filler metals is FCAW-S)." This Annex contains details of what filler metal combinations must be tested, as well as the testing methodology and acceptance criteria. When such tests are performed and acceptable results achieved, the combination can be intermixed without concerns about negative interaction.

It is not necessary to avoid all intermix applications of FCAW-S and other processes. If fracture toughness is not an issue, the AISC *Specification* does not require investigation into the mechanical properties of the mixed weld metal. When fracture toughness is required (e.g., seismic applications, heavy section welding), the compatibility of the intermixed materials should be investigated. Tests to determine compatibility can be performed by the contractor or an independent third party, but in most cases, these data can be obtained from knowledgeable filler metal manufacturers.

SAW, FCAW-G, SMAW and GMAW have all been intermixed in many applications over the years without any reports of negative interactions. Thus, such concerns are limited to situations where one of the materials is FCAW-S. FCAW-S welds may be intermixed with welds made with other FCAW-S electrodes without risk of negative interactions, provided that both electrodes have specified minimum CVN toughness requirements.

2.4 SAW

2.4.1 Fundamentals

Submerged arc welding (SAW) is "an arc welding process using an arc or arcs between a bare metal electrode or electrodes and the weld pool. The arc and molten metal are

Fig. 2-15. FCAW-S application.

shielded by a blanket of granular flux on the workpieces. The process is used without pressure and with filler metal from the electrode and sometimes from a supplemental source." (AWS, 2010d). The process is illustrated in Figure 2-16 and is frequently referred to as simply "subarc." Because the arc is completely covered by the flux (i.e., it is submerged), it is not visible and the weld is made without the flash, spatter and sparks that characterize the open-arc processes. The nature of the flux is such that little smoke or visible fumes are emitted under normal conditions.

SAW is typically used automatically, although semiautomatic operation is also utilized. In automatic welding, the electrode is automatically positioned with respect to the joint and also is automatically propelled along the length of the joint as shown in Figure 2-17. In the semiautomatic version of the process, the welder orients the electrode with respect to the joint and also moves the welding gun along the weld joint.

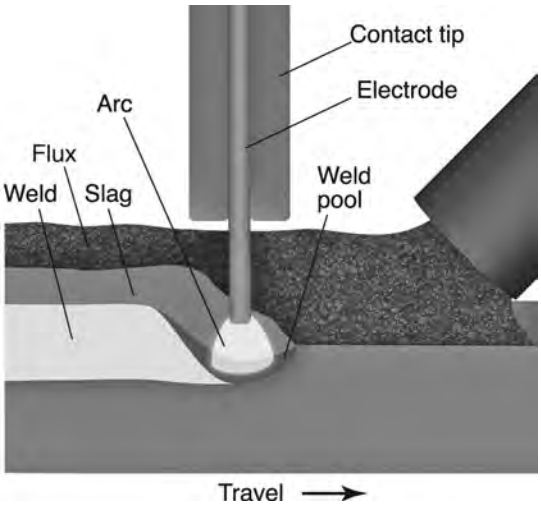

Fig. 2-16. SAW process.

SAW is most commonly used with one electrode, although it is possible to use more. Two electrodes may be fed through a single electrical contact, and this is formally called parallel electrode welding, although it is often called twin electrode or tiny twin™ welding. When two or more separate individually controlled arcs are used, the configuration is formally known as multiple electrode welding, although it is often called tandem arc welding.

The granular flux must stay in place to shield the weld pool, and thus, SAW is restricted to the flat and horizontal welding positions.

SAW is one of the prequalified processes listed in AWS D1.1, and the WPS used with this process can be prequalified, providing all the criteria of AWS D1.1, clause 3, are met.

2.4.2 Equipment

Like FCAW, SAW equipment consists of a power source, a wire feeder, a device through which the electrode is fed and electrical power is introduced, and a work lead and clamp. The power supply can be either constant current or constant voltage, and SAW can be performed with either direct or alternating current. For direct current welding, either DC+ or DC− may be used. For alternating current, the AC may

Fig. 2-17. Automatic SAW.

be sinusoidal (a sine wave) or squarewave. Advanced SAW power supplies allow the squarewave output to be controlled in a variety of ways—the frequency, amount of positive versus negative cycle, and other output characteristics can all be controlled. SAW can be performed with constant voltage (CV) or constant current (CC) systems. CC has been traditionally preferred when making large weld passes, although special CV output modes have been developed to mimic the advantages that CC has traditionally offered.

In the more common automatic mode, the electrode is propelled along the joint in a mechanized system, or the work is moved under a fixed welding head. The mechanized systems range from simple systems that move a semiautomatic gun along the joint, to self-contained wire-feeder/motion-control systems typically called tractors, as shown in Figure 2-18. Welding fixtures are typically required when the work is moved under a fixed head, and such systems may become quite large and complex depending on the nature of the work being done.

SAW additionally requires a flux delivery system. For many applications, a simple hopper allows the flux to be delivered by gravity. For semiautomatic applications, a pressurized container is used as shown in Figure 2-19, and the flux is delivered by means of compressed air, which must be clean and dry or the flux will become contaminated. Some SAW systems may also have an automated flux removal and recycling system.

Multiple-electrode SAW refers to a variation of submerged arc that utilizes at least two separate power supplies and two separate wire drives and feeds two electrodes independently. Some applications, such as the manufacture of line pipe, may use up to five independent electrodes in a multiple-electrode configuration. Multiple-electrode welding typically utilizes at least one AC arc to mitigate the magnetic interference that occurs with multiple DC arcs.

2.4.3 Consumables

Consumables for SAW consist of electrodes and fluxes. Electrodes typically are solid but may be tubular with metal powders or flux ingredients inside. Solid electrodes usually contain a thin coating of copper, which aids in electrical conductivity as the wire passes through the contact tip. For structural steel fabrication, typical electrode diameters range from 5⁄64 to 3⁄16 in. (2.0 to 4.8 mm), although both larger and smaller electrodes are used. Fluxes are granular materials that are also consumed, forming the slag coating on top of the completed weld.

Fluxes may be categorized based on the means of manufacture. Fused fluxes are made by melting a mixture of materials, allowing the mix to melt, and then breaking the glass-like mass into small particles. Bonded fluxes, also called agglomerated fluxes, are made by mixing various dry ingredients with a silicate binder, forming pellets that are subsequently baked. The baked pellets are then broken up,

Fig. 2-18. SAW with tractor.

sized and packaged. Agglomerated fluxes have the advantage of permitting the addition of deoxidizers and alloying elements that cannot withstand the melting cycle associated with fused fluxes. However, fused fluxes are typically more resistant to moisture absorption. Both fused fluxes and bonded (agglomerated) fluxes are capable of depositing welds with very low diffusible hydrogen levels.

Fluxes may also be classified as active or neutral. Active fluxes contain deliberate additions of manganese and silicon and are primarily designed for single- or limited-pass welding. These ingredients enable welding on materials with heavier rust and scale and also make single-pass welds more crack resistant. Neutral fluxes, on the other hand, are designed primarily for multiple-pass welds and do not have the same ability to handle surface contaminants as do the active fluxes.

The amount of flux that is melted per pound (kg) of weld deposit is dependent on the arc voltage; the higher the voltage, the more flux is melted. When active fluxes are used, and when the voltage is increased, more manganese and silicon is added to the weld deposit. When this is done, and particularly when multiple-pass welding is performed, high voltages with active fluxes can lead to alloy buildup in the weld deposit, resulting in high strength, crack-sensitive welds. However, when voltage changes are made with neutral fluxes, the manganese and silicon content of the weld deposit does not appreciably change. Active fluxes therefore typically are used for single-pass or limited-pass welds and neutral fluxes for multi-pass welds.

Alloy flux is a distinct type of shielding material made by adding specific alloys to the flux. When the flux is melted, the alloys are transferred to the weld. Thus, a carbon steel electrode can be used and an alloy deposit obtained. A typical structural steel application of alloy flux involves welding on ASTM A588 weathering steel where alloy fluxes are routinely used, introducing nickel into the deposit to provide atmospheric corrosion resistance.

2.4.4 Electrode and Flux Classification

Submerged arc welding filler materials are classified under AWS A5.17 for carbon steel and AWS A5.23 for low-alloy filler metals. Both fluxes and electrodes are covered under these specifications. Because SAW is a two-component process—that is, flux and electrode—the classification system is slightly different than for other filler materials.

SAW electrodes are typically solid, but composite electrodes are also used. Solid electrodes are classified based on the composition of the wire, whereas composite electrodes are classified on the deposit chemistry. Under AWS A5.17, the electrode will carry a classification that consists of two letters, one or two numerical digits, and in some cases, a

Fig. 2-19. Pressurized SAW delivery system.

final letter. The first letter is an E, which stands for electrode. The second letter will be L, M or H, referring to a low, medium or high level of manganese in the electrode. The next one or two digits refer to the nominal carbon content in hundredths of a percent. A "12" in this location, for example, indicates a nominal carbon content of 0.12%. It should be emphasized that this is the nominal value and it is possible to have higher and lower carbon contents in a specific electrode. In some instances, the electrode will be made of killed steel. When this is the case, silicon normally is added and the electrode will have a "K" at the end of the classification (e.g., EM13K). Composite electrodes will contain a "C" after the "E" in the electrode designation.

Electrodes classified under AWS A5.23 are of the low-alloy variety and have a more complex nomenclature because of the variety of alloys that may be involved. The most important alloys for structural welding are the "Ni," or nickel alloys (e.g., ENi1K), and "W," or weathering alloys.

Fluxes are always classified in conjunction with an electrode. Welds made with the flux-electrode combination must meet specific mechanical property requirements. After a flux is selected and a classification test plate welded, a flux-electrode classification may be established. Specimens are extracted from the weld deposit to obtain the mechanical properties of the flux-electrode combination. The classification will follow the format of an "F" followed by a single or two digit number, an "A" or "P," a single digit, and a hyphen that separates the electrode classification. Thus, a typical flux-electrode may be classified as an F7A2-EM13K. The "F" stands for flux and the "7" indicates all of the following: a 70- to 95-ksi (480 to 655 MPa) tensile strength deposit, a 58-ksi (400 MPa) minimum yield strength, and a minimum of 22% elongation. The "A" indicates that the deposit is tested in the as-welded condition. The "2" indicates a notch toughness of 20 ft-lb at –20°F (27 J at –29°C) (where the "2" in the classification is a reference to the temperature), and the balance of the classification identifies the electrode used.

Because of the popularity of the SAW process for pressure vessel fabrication where assemblies are routinely stress relieved, submerged arc products may be classified in the post-weld heat-treated, or stress relieved, condition. When this is done, a "P" replaces the "A." For structural work which is seldom stress relieved, the "A" classification is more common.

For products classified under AWS A5.23, a format similar to that of AWS A5.17 is used, with this major exception: At the end of the flux-electrode classification, a weld deposit composition is specified as shown in Figure 2-20. For example, an F7A2-ENi1-Ni1 indicates that the electrode, an ENi1, delivers an F7A2 deposit when used with a specific flux. In addition, the deposit has a composition that meets the requirements of Ni1. In this case, a nickel-bearing electrode deposits a weld that contains nickel. It is also possible to use alloy fluxes that, with carbon steel electrodes, are capable of delivering alloy weld metal. In this case, a typical classification may be an F7A2-EL12-Nil. In this example, an EL12 electrode (a nonalloy electrode that contains a low level of manganese) is used with an alloy flux. The result is an alloyed deposit. This is commonly done when nickel bearing deposits are desired on weathering steel that will not be painted.

Some submerged arc flux/electrode combinations are capable of delivering high-quality welds, including having very good notch toughness, in a single pass, or in a one-pass-per-side configuration. For classification purposes, these filler metals can be tested in a "two-run" test plate, where one weld pass is made on each side of a butt joint. The classification format of flux/electrode combinations tested in this manner takes on the format of "F7TA2," where the "T" stands for two-run. The other letters (F and A) and numbers (7 and 2) have the same significance as is typical for SAW filler metals.

2.4.5 Flux Recovery

Only part of the flux deposited from a hopper or a gun is melted, or fused, in welding. The unfused, granular flux may be recovered for future reuse and is known as recovered flux. The unmelted flux does not undergo chemical changes and may therefore be capable of delivering quality welds when used the next time. However, this flux can be contaminated in the act of recovery. If it comes in contact with oil, water, dirt or other contaminants, the properties of the weld deposit made with reclaimed flux may be adversely affected.

Loose mill scale can be picked up along with the unfused flux when it is recovered. The recovered flux can be passed through a magnetic separator to capture metallic scale. Pieces

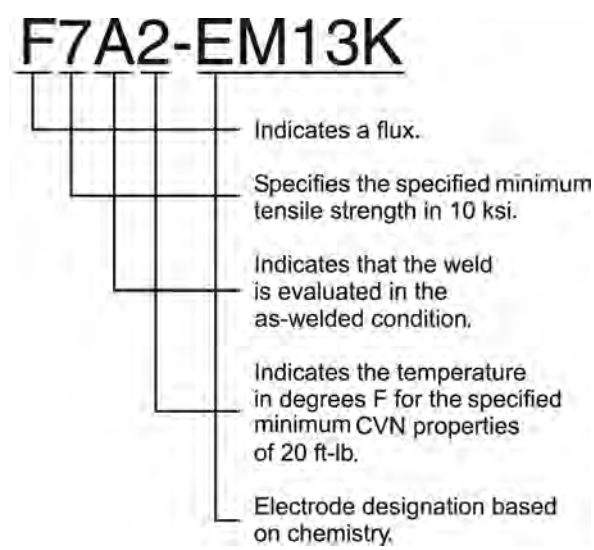

Fig. 2-20. Flux-electrode classification system.

of slag can be inadvertently recovered with the unmelted flux; screens can be used to separate slag from flux.

The method of flux recovery can range from sweeping up the flux with brooms and pans, to vacuum recovery systems as shown in Figure 2-21; the method chosen should take into account the need to avoid contamination. When flux is handled and rehandled, there is the potential for the mechanical breakdown of particles and the modification of the particle size distribution. This is pronounced with some vacuum recovery systems; some systems have filters to capture the fine particles called "flux flour" which is normally discarded.

When recovered flux is used, it should be mixed with unused, new flux. Typically, the mix will be approximately 50-50. The condition that should be avoided is starting with a hopper of new flux that may consist of several hundreds of pounds (kg) of material, recovering flux and returning it unmixed to the hopper and continuing the practice until the hopper is empty. When this approach is used, the final flux used may have been recovered a half dozen times; minor variations that occur during flux recovery become concentrated and when not mixed with new material, the weld quality may be affected.

2.4.6 Crushed Slag

After the flux has melted and solidified, the resulting product is called slag. Slag is typically chemically different than the unfused flux. However, this welding byproduct can be crushed and reused in some applications. When this is done, the product is known as crushed slag. It should not be treated in the same manner as new, unused flux. Often, crushed slag is intermixed with new flux. Performance and mechanical properties of crushed slag may differ from those of new flux. AWS D1.1 contains specific procedures for the use of crushed slags.

2.4.7 Process Advantages and Limitations

SAW is capable of high productivity rates because it can use higher welding currents, resulting in higher deposition rates and deeper penetration. Square wave technology may further increase deposition rates without increasing welding current. Higher deposition rates simply mean that the contractor can deposit the required weld in less time. The deeper penetration may allow fillet weld sizes to be reduced or may permit the use of groove weld details that require less weld metal. For even higher deposition rates, a second or third electrode can be added into the system to increase productivity further. Because the process typically is automated, SAW welds usually are made continuous for the length of the joint.

Welds made under the protective layer of flux are excellent in appearance and spatter-free. This is of particular significance for steel designated as architecturally exposed structural steel (AESS) where the completed SAW weld rarely requires any post-weld treatment to enhance its appearance.

Another benefit of the SAW process is freedom from the open arc. This means that the welder is not required to use the standard protective helmet, and multiple welding operations can be conducted in a tight, restricted area without the need for extensive shields to guard the operators from arc flash. The process produces little smoke, which is another production advantage, particularly in situations with restricted ventilation.

The freedom from the open arc, however, also proves to be one of the chief drawbacks of the process; it does not allow the operator to observe the weld puddle. When SAW is applied semiautomatically, the operator must learn to propel the gun carefully in a manner that will ensure uniform bead contour. The experienced operator relies on the formation of a uniform slag blanket to indicate the nature of the deposit underneath it. For single-pass welds, this is mastered fairly readily; however, for multiple-pass welding, the degree of skill required is significant. Most submerged arc applications are mechanized.

The nature of the application must lend itself to automation if the process is to prove viable. Long, uninterrupted, straight seams are ideal applications for SAW. Short, intermittent welds are better made with one of the open-arc processes.

Finally, SAW is restricted to the flat and horizontal position. For shop fabrication, the use of positioners, or simple reorientation of the weldment, can facilitate in-position welding. However, field conditions prohibit such opportunities and, thus, restrict the suitability of SAW.

2.4.8 Applications

Because of its advantages, many fabricators will use SAW anywhere it is practical. Typical applications include the longitudinal seams on plate girders, box sections, and cruciform columns. In bridge shops, butt splices of flanges and webs are typically made with SAW, as are the stiffener-to-web welds.

2.5 GMAW

2.5.1 Fundamentals

Gas metal arc welding (GMAW), illustrated in Figure 2-22, is defined in AWS A3.0 as "an arc welding process using an arc between a continuous filler metal electrode and the weld pool. The process is used with shielding from an externally supplied gas and without the application of pressure" (AWS, 2010d). The process and equipment are very much like FCAW-G. GMAW uses a solid- or metal-cored electrode (also called a "composite" electrode) and leaves no

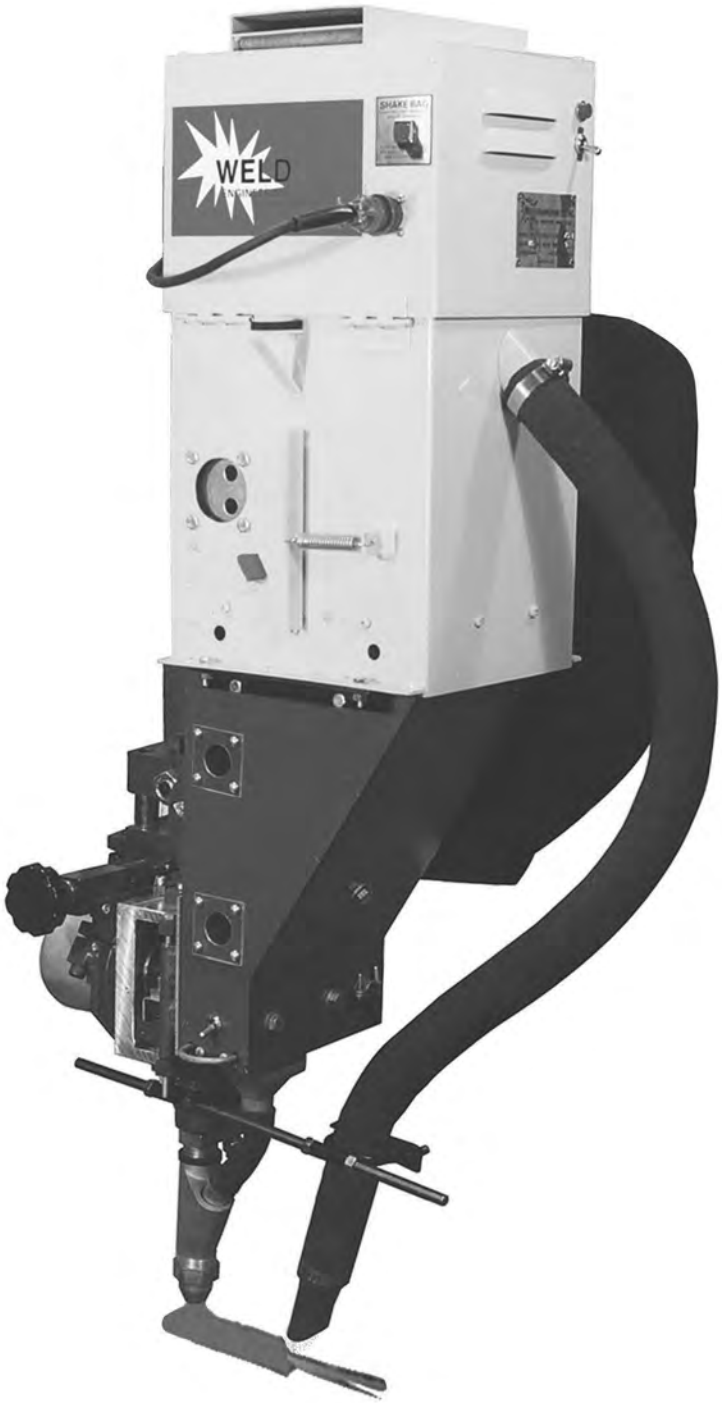

Fig. 2-21. Flux vacuum recovery system (courtesy of Weld Engineering).

appreciable amount of residual slag. Historically, GMAW has not been a common method of welding in the structural steel fabrication shop because of its sensitivity to mill scale, rust, limited puddle control, and the potential loss of shielding gas. However, developments such as metal-cored electrodes and improved controls for pulsed GMAW are resulting in increased use of this process for structural steel.

GMAW has a variety of colloquial names, including the popular term MIG (metal inert gas) welding, and others, such as mini-wire welding, micro-wire welding, and solid-wire welding. When GMAW is performed with carbon dioxide (CO_2) shielding gas, it may be referred to as MAG (metal active gas) welding.

The transfer of metal from the electrode to the weld pool may occur in several manners, called transfer modes. While a dozen or so transfer modes have been defined, four are commonly used in structural applications. These modes of transfer are discussed separately in Section 2.5.6 of this Guide.

GMAW is one of the prequalified processes listed in AWS D1.1, and the WPS used with this process can be prequalified, providing all the criteria of AWS D1.1, clause 3, are met. As an exception, GMAW-S (the short-circuit transfer mode) may not be used with prequalified WPS.

2.5.2 Equipment

GMAW, like FCAW, requires a power supply, a wire feeder, a gun and cable system, a work lead and clamp, and a power lead that runs from the power source to the wire feeder as shown in Figure 2-23. Some GMAW power supplies and wire feeders are combined into one, self-contained housing as shown in Figure 2-24. Additionally, a shielding gas regulator and flow meter plus hoses are required. The wire feeder mechanically drives the coiled electrode through the gun and cable system. Gun cable assemblies are typically 10 to 15 ft (3 to 5 m) long, allowing for some movement of the gun from the wire feeder.

GMAW and FCAW equipment is similar enough that in many cases, it is used interchangeably. GMAW power supplies may have additional controls for optimizing the output characteristics for certain modes of transfer.

For steel applications, GMAW is performed with direct current and with the electrode positively charged (DC+). Traditionally, GMAW has used CV power supplies. Some of the advanced GMAW power supplies for pulsed spray transfer are more like CC machines.

2.5.3 Consumables

Most GMAW is performed with solid electrodes, although metal-cored composite electrodes may be used. The solid electrodes are normally 0.035 to 0.052 in. (0.9 to 1.3 mm) in diameter, and metal-cored electrodes are typically 0.045 to 5⁄64 in. (1.2 to 2.0 mm) in diameter. However, in both cases, smaller and larger electrodes can and have been used. GMAW solid electrodes typically have a light copper plating on the surface to improve electrical contact between the wire and the contact tip.

Metal-cored electrodes are similar to flux-cored electrodes in that both are tubular but also different in that the core material for metal-cored electrodes is metal powder and does not contain slag-forming ingredients. The resulting weld is virtually free of slag, just as with other forms of GMAW. Metal-cored electrodes typically have increased ability to handle mill scale and other surface contaminants, as compared to solid GMAW electrodes. For a given current (amperage), metal-cored electrodes offer higher deposition

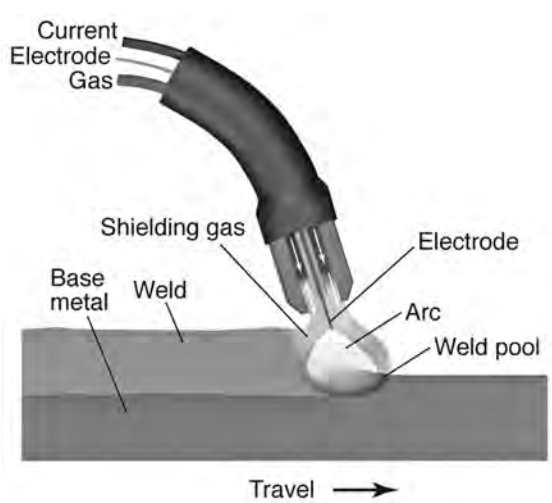

Fig. 2-22. GMAW process.

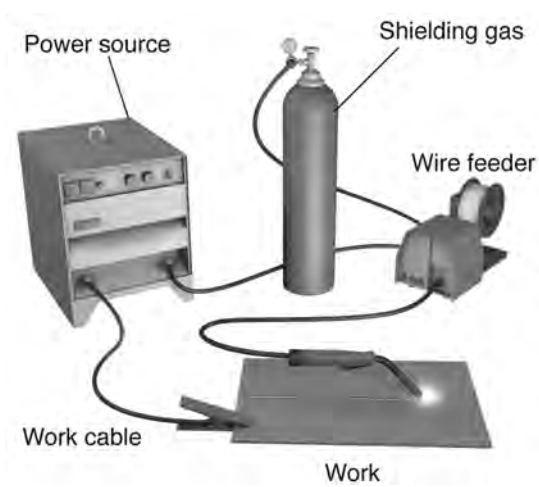

Fig. 2-23. GMAW equipment.

rates than solid electrodes. However, metal-cored electrodes are, in general, more expensive than the solid electrode alternative.

2.5.4 Electrode Classification

GMAW electrodes are covered by AWS A5.18, AWS A5.28 and AWS A5.36 filler metal specifications. AWS A5.18 deals with carbon steel electrodes (solid and metal-cored), and AWS A5.28 similarly addresses the low alloy counterparts. AWS A5.36 deals with metal-cored electrodes for both carbon steel and low alloy steel applications as well as addressing electrodes for FCAW (see Section 2.3.4 of this Guide). For solid electrodes, the classification is based on the electrode composition, whereas for metal-cored electrodes, the weld deposit is the basis of the chemistry control. In both cases, the mechanical properties are based upon tests made on deposited weld metal.

Figure 2-25 illustrates the GMAW electrode classification system. The ER70S-3 denotes a solid electrode capable of depositing weld metal with a 70-ksi (480 MPa) specified minimum tensile strength, and CVN toughness of 20 ft-lb at 0°F (27 J at −18°C) is indicated. If a metal-cored electrode were specified, a "C" would replace the "S," and the "R" would not be used.

2.5.5 Shielding Gas

A variety of shielding gases or gas mixtures may be used for GMAW. The selection of gas type primarily depends on the desired mode of metal transfer and cost. Carbon dioxide (CO_2) is the lowest cost gas, but it cannot be used for spray and pulsed spray transfer. Also, welding with pure CO_2 typically results in high spatter levels. Argon-based mixtures of gas can be used for all modes of transfer, resulting in less spatter. Argon-based gas mixtures are considerably more

Fig. 2-24. Self-contained GMAW wire feeder/power supply.

expensive than pure CO_2. The selection of the shielding gas can affect the weld penetration and penetration profile, as well as the overall appearance. Figure 2-26 compares welds made with various shielding gases at the same wire feed speed and voltage.

Carbon dioxide is not an inert gas at high temperatures; rather, it is chemically active. This has given rise to the term MAG (metal active gas) for the process when CO_2 is used, and MIG (metal inert gas) when predominantly argon-based mixtures are used.

For GMAW, pure argon shielding gas is not used, but rather, small quantities of CO_2 or oxygen, or both, are added. While shielding gas is used to displace atmospheric nitrogen and oxygen, it is possible to add lesser quantities of oxygen into mixtures of argon—generally at levels of 2 to 8%. This helps stabilize the arc and decreases puddle surface tension, resulting in improved wetting. Tri- and quad-mixes of argon, oxygen, carbon dioxide and helium are possible, offering advantages such as improved arc action, better deposit appearance, and reduced fume generation rates.

The shielding gas may influence the properties of the deposited weld metal. The suitability of the specific gas mixture and the specific filler metal being used should be verified. Such documentation is typically available from the electrode manufacturer or gas supplier.

2.5.6 Modes of Transfer

There are a variety of modes of metal transfer associated with GMAW. Commercially, only four are popular for structural steel fabrication. Normally, the issue of the mode of transfer would be considered simply one of the contractor's means and methods. However, the engineer should be aware that one mode of transfer, short circuit, poses some unique concerns.

The following modes of transfer will be discussed: short-circuit transfer, globular transfer, spray transfer, and pulsed spray transfer.

Short-Circuit Transfer

Short-circuit transfer is a "metal transfer in which molten metal from a consumable electrode is deposited during repeated short circuits" (AWS, 2010d). It is abbreviated as GMAW-S and is a low-energy mode of transfer, ideal for welding on thin gauge materials. It is the only suitable mode of transfer for all-position GMAW unless pulsed spray transfer is used (which requires specialized equipment). This mode of transfer is sometimes called short arc welding.

In this mode of transfer, the small-diameter electrode, typically 0.035 in. or 0.045 in. (0.9 mm or 1.2 mm), is fed at a moderate wire feed speed with relatively low arc voltages. The electrode will touch the workpiece, resulting in a short in the electrical circuit. Once the electrode shorts, the arc will be extinguished. At this point, the current increases dramatically, superheating the electrode causing it to melt. Just as excessive current flowing through a fuse causes it to blow, so the shorted electrode will heat and melt, breaking the electric short and initiating a momentary arc. A small amount of metal will be transferred to the work at this time. This cycle will repeat itself when the electrode once again shorts to the work. This occurs somewhere between 20 and 200 times per second, creating a characteristic buzz to the arc.

GMAW-S is ideal for sheet metal but often results in significant fusion problems if applied to heavier materials. The weld may have incomplete fusion, also called cold lap or cold casting. This is unacceptable because the welded connections will have virtually no strength.

Caution should be exercised when applying GMAW-S to heavy plates or material with thick scale. The use of short-circuit transfer on heavy plates is not totally prohibited by AWS D1.1; with proper procedures, it can be used to make quality welds and it is the only mode of transfer that can be used out-of-position with gas metal arc welding, unless specialized equipment is used. Weld joint details must be

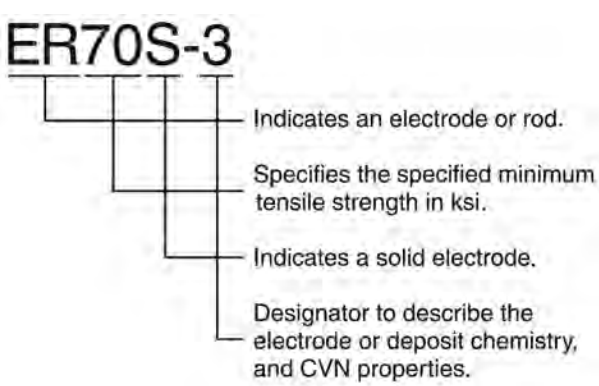

Fig. 2-25. GMAW classification system.

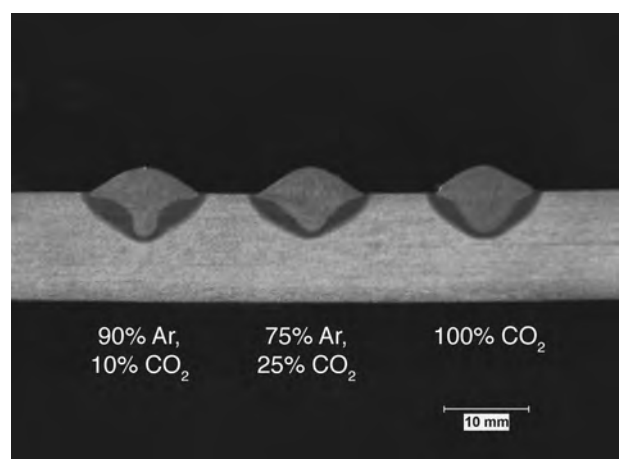

Fig. 2-26. Effect of shielding gas on penetration profiles.

Table 2-4. Typical GMAW-S Amperage Levels		
Electrode Diameter	**Minimum Amperage**	**Maximum Amperage**
0.030 in. (0.8 mm)	50	150
0.035 in. (0.9 mm)	75	175
0.045 in. (1.2 mm)	100	225

carefully designed when GMAW-S is used. Welders must pass specific qualification tests before using this mode of transfer, and it is not prequalified in AWS D1.1. Thus, all WPS for GMAW-S must be qualified by test.

It is difficult to determine when GMAW is and is not being performed with the short-circuiting mode of transfer. The fundamental concern is not whether the mode is GMAW-S or something else such as globular transfer (discussed in the next Section), but rather, whether fusion is being achieved. Table 2-4 has been created from the AWS D1.1 Commentary where typical GMAW-S amperage values are listed.

It is reasonable and conservative to assume that, if the welding current for a given diameter of electrode is below the maximum value shown in Table 2-4, GMAW-S is being used.

If GMAW is done in the vertical or overhead position, the mode of transfer can be assumed to be GMAW-S unless pulsed spray transfer is used.

Globular Transfer

Globular transfer is "the transfer of molten metal in large drops from a consumable electrode across the arc" (AWS, 2010d). This GMAW mode of transfer occurs when high concentrations of carbon dioxide shielding gas are used. Globular transfer is characterized by deep penetration and relatively high levels of spatter. Weld appearance can be poor and it is restricted to the flat and horizontal position. Globular transfer may be preferred over spray transfer because of the low cost of CO_2 shielding gas and the lower level of heat felt by the operator.

Spray Transfer

Spray transfer is a mode of transfer "…in which molten metal from a consumable electrode is propelled axially across the arc in small droplets" (AWS, 2010d). The fine molten droplets are smaller in diameter than the electrode diameter as shown in Figure 2-27. Spray transfer is characterized by high wire-feed speeds at relatively high voltages and a high level of energy transferred to the work; therefore, spray transfer is restricted to the flat and horizontal positions. High-quality welds with particularly good appearance are the result. Spatter is practically nonexistent with spray transfer.

The shielding used for spray transfer is composed of at least 80% argon, with the balance made up of either carbon dioxide or oxygen. Typical mixtures include 90-10 argon-CO_2 and 95-5 argon-oxygen. Other proprietary mixtures are available from gas suppliers.

The current required to achieve spray transfer is called the transition current. Each electrode diameter/shielding gas combination has a different transition current. Increased levels of argon in the gas mix will result in a lower transition current. Conversely, a higher CO_2 level corresponds to a higher transition current.

Pulsed Spray Transfer

Pulsed spray transfer is "a variation of spray transfer in which the welding power is cycled from a low level to a high level, at which point spray transfer is attained, resulting in a lower average voltage and current" (AWS, 2010d). The process utilizes a background current, which is continuously applied to the electrode, and a pulsing peak current that momentarily forces spray transfer. Metal transfer occurs during the pulse. The pulsing rate is optimally applied as a function of the wire feed speed, and ideally, a single droplet of metal is transferred by the pulse. After the droplet is released, the power supply then delivers a lower background current, which maintains the arc. This occurs between 100 and 400 times per second. This mode of transfer is sometimes abbreviated as GMAW-P and may be called pulsed arc.

One advantage of pulsed spray transfer is that it can be used to make welds out-of-position. For flat and horizontal

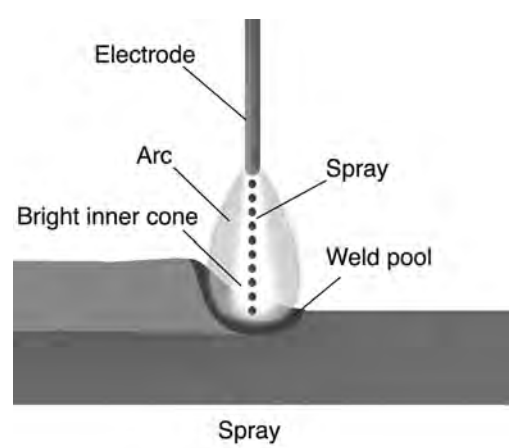

Fig. 2-27. GMAW spray transfer.

work, GMAW-P may not be as fast as spray transfer, but quality results can be obtained. However, used out-of-position, it is free of the problems associated with the short-circuiting mode. Weld appearance is good and quality can be excellent. The disadvantage of pulsed arc transfer is that the equipment is more complex and costly than that required for other modes of transfer. However, with new equipment advances, the machines have become easier to use, and the popularity of this mode of transfer is increasing.

Many advanced pulse waveforms have been developed over the years. Pulsed waveforms deal with the peak current, background current, and time at those levels; frequency of pulsing; as well as the rate at which the current levels are reached and maintained. Pulsing waveforms may be developed to meet one specific application need such as higher travel speeds, decreased spatter levels, better penetration profiles, or all of the above.

2.5.7 Process Advantages and Limitations

GMAW, regardless of the mode of transfer, has some inherent advantages and limitations that will be presented first. Because no slag covers the weld, cleanup after welding is simple and low cost. GMAW electrodes typically cost less than flux-cored electrodes. GMAW has all the previously cited advantages of semiautomatic and automatic processes. GMAW with solid electrodes is capable of depositing weld metal with very low levels of diffusible hydrogen—a distinct advantage of the process when welding on higher strength steels. Many robotic welding applications utilize GMAW, in part due to the freedom from slag that must be removed. Multiple-pass welding is easily accomplished with robots that utilize GMAW for the same reason.

An overall limitation of GMAW, regardless of mode, is that the process is more sensitive to contaminants that might be present on the steel surface, including mill scale, rust and oil. GMAW can handle some of these contaminants, but other processes with slag systems can typically tolerate greater levels of such materials. Porosity may result when surfaces are too contaminated, and heavy scale may inhibit fusion. Steel that is shot blasted before welding can be readily welded with GMAW. As a gas-shielded process, GMAW has the same limitations as does FCAW-G: if the gas shield is disturbed, porosity will result. Even before the onset of porosity, the mechanical properties of the weld deposit, specifically the ductility and toughness, may deteriorate (FEMA, 1997).

Additional advantages and limitations of GMAW depend on the mode of transfer. Spray transfer permits higher deposition rates and deposits welds with good appearance but requires the use of the higher-cost, argon-based shielding gas mixtures and can be used only in the flat and horizontal positions. Globular transfer uses low-cost carbon dioxide shielding and offers high deposition rates, but weld appearance is inferior to spray transfer, and extensive spatter is typical. The mode is also restricted to the flat and horizontal positions. Short-circuit transfer is ideal for sheet metal, and while it can be used out-of-position (vertical and overhead), the strong tendency toward fusion defects makes it undesirable for most structural applications. Pulsed spray arc permits all-position welding and deposits welds with good appearance. Like spray transfer, this mode requires the use of the more expensive, argon-based shielding gas mixtures. The welding equipment is more expensive and complex, but technical advances in power source controls have simplified the user interfaces.

2.5.8 Applications

GMAW is growing in popularity in the structural steel fabrication industry in the United States, and both solid and metal-cored electrodes have been used for shop fabrication of a variety of miscellaneous applications. A major user of GMAW is the metal building industry, where nearly all semiautomatic welding is done with this process. Because it offers freedom from slag, GMAW is often used for tack welding.

The increase in popularity of GMAW for structural steel fabrication is directly linked to the increased use of GMAW-P. The pulsed mode allows for out of position welding, as well as flat and horizontal welding with very good results, providing the steel is suitably cleaned. GMAW with solid electrodes is capable of depositing welds with very low-hydrogen contents, making the process well suited for use on higher strength steels.

2.6 ESW/EGW

2.6.1 Fundamentals

Electroslag welding (ESW) is "a welding process producing a coalescence of metals with molten slag, melting the filler metal and the surfaces of the workpieces…The process is initiated by an arc that heats the slag. The arc is then extinguished by conductive slag, which is kept molten by its resistance to electric current passing between the electrode and the workpieces" (AWS, 2010d). The process is illustrated in Figure 2-28. Electrogas welding (EGW) is "an arc welding process using an arc between a continuous filler metal electrode and the weld pool, employing approximately vertical welding progression with backing to confine the molten weld metal. The process is used with or without an externally supplied shielding gas and without the application of pressure" (AWS, 2010d). The process is illustrated in Figure 2-29. Both processes are used for vertical up-welding, with the weld pool contained by backing on the sides of the weld. Groove welds in butt and T-joints are the most common applications for these processes. The welds are typically completed in a single pass.

Although ESW and EGW are used in similar applications, the means by which the electrodes are melted is fundamentally different. The apparatus needed for electroslag and electrogas welding are mechanically similar in that both utilize backing to contain the weld metal in the joint. Such backing may be copper or steel. When copper is used, the backing is often called a dam or shoe, is typically water cooled, and is removed from the joint after the weld has solidified and cooled. When steel backing is used, it is fused to the weld and is typically left in place, becoming part of the weldment.

ESW is not an arc welding process but a resistance welding process. Initially, when ESW is started, it functions like SAW; an arc buried under the flux melts the base metal, filler metal and flux, forming a slag. Unlike SAW, the slag for ESW is electrically conductive. After a slag blanket is established, the electrical current is conducted from the electrode, through the slag, and into the workpiece. The high currents transferred through the slag keep it hot. As the electrode is

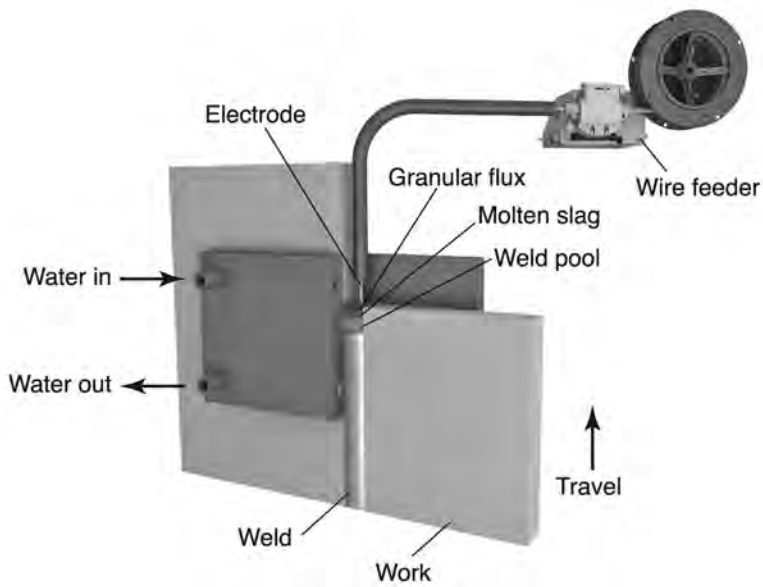

Fig. 2-28. ESW process.

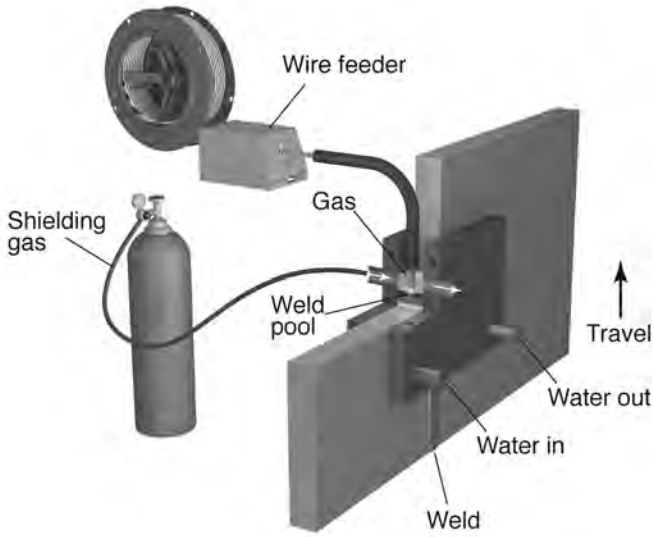

Fig. 2-29. EGW process.

fed through this hot slag, it melts, and molten metal drips from the electrode into the weld pool. No arc is involved, except when the process is started.

EGW is more like GMAW in a vertical orientation. An electrode is fed through a conductor, and an arc is established between the electrode and the weld pool. A shielding gas protects the weld pool. Throughout the process, the arc is established with EGW. Electrogas is a popular welding process in Asia, but in the United States, ESW is more common.

A third process, or process variation, exists that combines features of both ESW and EGW. It is an arc welding process like EGW but requires no shielding gas. Like ESW, it involves slag, which originates as a flux inside a cored electrode. It is typically designated as EGW without gas.

A variation of ESW known as narrow gap ESW, or ESW-NG was developed in the 1980s by research sponsored by the Federal Highway Administration (FHWA). The research was prompted by a brittle fracture of an ESW weld on a highway bridge in the 1970s, causing FHWA to impose a moratorium on the use of ESW for bridge applications. ESW-NG overcame some of the limitations of the traditional ESW process. The variation utilizes a narrower root opening of approximately ¾ in. (20 mm), a tubular electrode, and a winged consumable electrode guide that helps to distribute thermal energy across the joint. Requirements for ESW-NG were first included in the AASHTO/AWS D1.5 *Bridge Welding Code* in 2010. The process is used for splicing bridge girder flanges. ESW-NG has also been used for building applications.

ESW and EGW are examples of the code-approved processes listed in AWS D1.1, and the WPS used with this process must be qualified by test.

2.6.2 Equipment

Equipment for ESW and EGW consists of a power supply, wire feeder, flux delivery system (for ESW) or gas delivery system (for EGW), appropriate power and work leads and connections, an apparatus to support the electrode with respect to the joint, and fixturing to hold the backing/dams in position. Lastly, the water-cooled copper shoes need a source of cooling water.

2.6.3 Consumables

Consumables for ESW consist of solid or cored electrodes and fluxes. In some process variations, consumable guide tubes are used. EGW consumables include solid or metal-cored electrodes and shielding gas.

2.6.4 Electrode Classification

Fluxes and electrodes for ESW are covered by AWS A5.25, while AWS A5.26 addresses electrodes for EGW. Like SAW, ESW involves two components: flux and electrode. Solid ESW and EGW electrodes are classified based upon the composition of the electrode. Composite (cored) electrodes for these processes are classified based upon the deposited weld metal chemistry. Mechanical property requirements are based upon tests made from deposited weld metal.

ESW flux-electrode combinations have classifications that follow the pattern shown in Figure 2-30. For EGW, a somewhat similar pattern is followed, as depicted in Figure 2-31.

2.6.5 Process Advantages and Limitations

Very high deposition rates can be obtained with ESW and EGW, leading to productivity gains. Normally, the joint details involve square edge preparations, eliminating plate

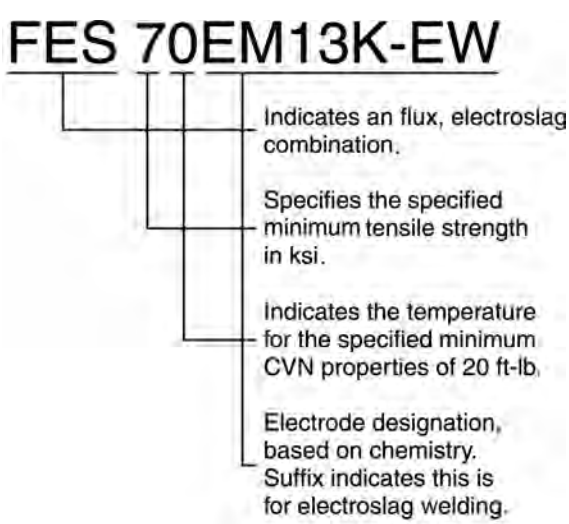

Fig. 2-30. ESW flux-electrode classification system.

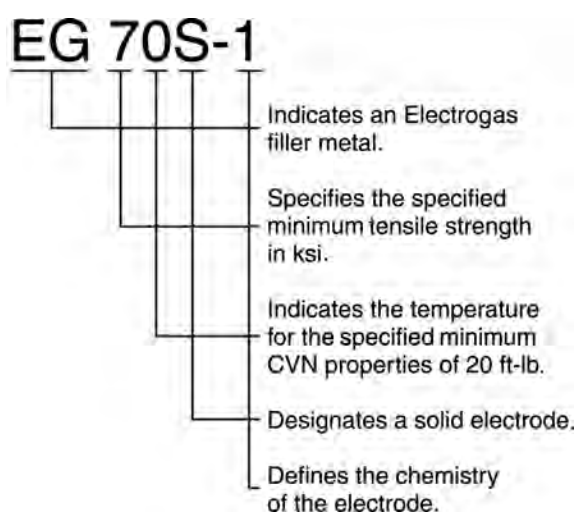

Fig. 2-31. EGW flux-electrode classification system.

beveling costs. In some cases, material handling is reduced because plates do not need to be flipped as is the case for double-sided welds made with SAW, for example. Angular distortion can be reduced, as compared to single-sided welds in V and bevel grooves.

For cyclically loaded connections where fatigue is a concern, ESW and EGW offer some advantages. The last metal to solidify in a welded connection will experience residual tensile stresses, while the surrounding material will resist the tensile stresses with residual compressive stresses. For ESW and EGW, the center of the vertical weld is the last to solidify and thus the area of highest residual tensile stress. This puts the face of the weld in compression, enabling the weld to better resist cyclic tensile stresses applied to the surface of the material.

An important advantage of ESW and EGW is the ability to weld into blind joints. A prime example is the welds of diaphragm plates in box columns. It is possible to fabricate an open box—that is, tie three plates together in a U-shape—and then to weld the diaphragm plates into the three sides with a variety of processes. However, once the box is closed by adding the fourth side, the final seam of the diaphragm plate to the column cannot be made with conventional processes, due to access restrictions. However, it is possible with ESW/EGW to weld through a hole in the box, thereby making a weld in an otherwise inaccessible location.

These processes are ideal for welding on thicker materials, and typical applications are 1 in. (25 mm) thick or greater. Materials 12 in. (300 mm) thick and greater have been welded with ESW using multiple electrodes. The processes are not well suited for use on thinner materials, however.

The equipment and associated fixturing are more expensive and less flexible than those associated with other processes.

Because of the sensitivity of the process to the many variables involved, specific operator training is required, and AWS D1.1 requires that all ESW and EGW welding procedure specifications be qualified by test. Like all processes, ESW and EGW must be controlled to obtain welds with the required quality. ESW and EGW have the advantage of being automatic processes, and when they are properly set up, consistently good results can be obtained. However, different variables are involved as compared to other processes. Fit of the copper shoes to the work, the temperature of the shoes, and the thickness of the slag layer are all factors that must be controlled in order to obtain quality welds.

Due to the high levels of heat input, often 10 times or more than that of SAW, the heat affected zone (HAZ) is large. Low fracture toughness of welds and HAZ has been an ongoing challenge associated with these processes, although new developments have mitigated these concerns. The cooling rates in the weld and HAZ can be adjusted by extraction of thermal energy through water-cooled copper shoes, resulting in improved mechanical properties.

2.6.6 Applications

ESW and EGW have niche applications within the structural steel fabrication industry. They can be highly efficient in the manufacture of tree column assemblies. In the shop, the beam flange-to-column welds can be made with the column in the horizontal plane. With the proper equipment and tooling, all four flange welds can be made simultaneously.

The welds that join continuity plates to columns can be made with ESW and EGW, as can column-to-base plate welds and column cap welds. As has been mentioned, another common application is for the welding of continuity plates inside box columns.

For bridge fabrication, flange splices effectively can be made with these processes, including transition joints involving materials of different thicknesses. However, because of problems in the past, ESW and EGW were restricted to the welding of compression members for many years. With the advent of the narrow-gap alternative, such restrictions are being reduced, and AWS D1.5 currently allows for the use of this alternative.

2.7 GTAW

Gas tungsten arc welding (GTAW) is "an arc welding process using an arc between a tungsten electrode (nonconsumable) and the weld pool. The process is used with shielding gas and without the application of pressure" (AWS, 2010d). The process is illustrated in Figure 2-32. Filler metal, if used, is added externally—either manually or automatically. The process is often referred to as TIG, which stands for tungsten inert gas.

In the structural steel field, GTAW is rarely used and then only for specialized applications. It is commonly used to weld aluminum and stainless steel and can be used to

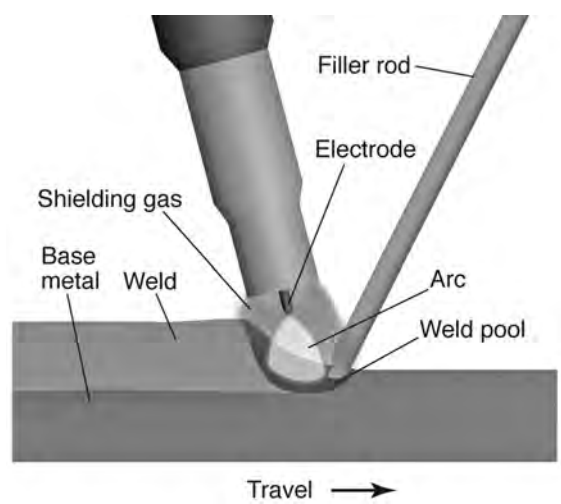

Fig. 2-32. GTAW process.

make high-quality root pass welds on tubing and pipe made of these materials, as well as carbon and low-alloy steels. GTAW is very slow, and accordingly, welds made with the process are expensive. The process tends to be used only when no other viable alternative process options exist.

GTAW is a code approved process in AWS D1.1 and the WPS used with this process must be qualified by test.

2.8 ARC STUD WELDING

Arc stud welding (SW) is "an arc welding process using an arc between a metal stud, or similar part, and the other workpiece. The process is used without filler metal, with or without shielding gas or flux, or with or without partial shielding from a ceramic or graphite ferrule surrounding the stud, and with the application of pressure after the faying surfaces are sufficiently heated" (AWS, 2010d). After the arc is initiated, the stud is pressed into the weld pool. Much of the molten metal and any contamination is expelled from the weld area as the stud is mechanically forced into the weld pool. A small pellet on the end of the base end of the stud provides some deoxidizers. Arc stud welding is frequently referred to simply as stud welding and is used to attach headed shear stud connectors to beams to facilitate composite action. Studs can be applied through decking, accomplishing the dual purpose of attaching the decking and the stud in one operation as shown in Figure 2-33.

Arc stud welding is a semiautomated process and fairly simple to use. The keys to obtaining a quality weld are to weld on relatively clean materials, use studs that are clean, and obtain the proper balance between welding current and arcing time. Generally, welded studs are visually inspected to ensure that weld flash surrounds the perimeter. When current is too low or time too short, the flash typically will not extend around the whole stud. Conversely, when the current is too high or the time too long, the flash may extend a long way beyond the ferrule, or may undercut the stud itself.

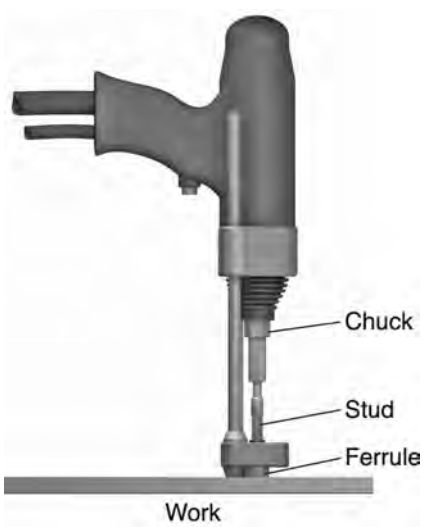

Fig. 2-33. Automatic stud welding (courtesy of Nelson Stud Welding).

To ensure that proper procedures are used, AWS D1.1 requires that at the beginning of a production shift or before welding with a given equipment set-up, the first two studs are tested by mechanically bending them over to an approximate 30° angle from the original stud axis. This is accomplished by striking the stud with a suitable hammer, or by inserting a pipe or other hollow device around the stud and bending it. A good weld will allow for such deformation and will not break. Poor procedures will typically cause the stud to break from the beam in the weld region. Because the studs will be buried in concrete, successfully tested studs are not routinely straightened afterwards.

Studs that do not have flash for the full 360° perimeter may be repaired by using one of the arc welding processes, such as SMAW or FCAW, and applying a fillet weld around the perimeter. Then, the repaired studs are bent 15°, not 30°, to prove their adequacy.

Stud welding is addressed in AWS D1.1, clause 7, separate from other welding processes. The process, which is not used to join primary members together, does not fit into the AWS D1.1 prequalified or code-approved listings that have been discussed. However, stud welding may be used under the conditions listed in AWS D1.1, clause 7, without procedure qualification testing. The previously mentioned testing of production welds, as well as the manufacturer's stud base testing, provides assurance that quality welds are made when proper procedures are used.

Information on stud welding of steel headed stud anchors is contained in Section 14.1 of this Guide.

2.9 THERMAL CUTTING PROCESSES

Inherent to steel fabrication is the need to cut shapes, plates and bars into pieces of the proper size. Cutting may be done mechanically with saws, shears, punches and nibblers, or it may be done with a variety of thermal cutting processes. In addition to cutting the primary members, weld access holes, copes, beam-web penetrations, and other details may need to be made in those members, and thermal cutting generally is used. Bevels are cut and metal removed by thermal cutting methods. Like welding, these thermal cutting processes introduce heat into the member, and the subsequent cooling of the hot metal creates a heat affected zone (HAZ) in the material being cut. Such HAZ are typically smaller than those associated with welding and are not usually of concern.

The quality of a cut edge is important. For edges that will not be welded upon, nicks and gouges affect the appearance and may affect the performance of a member, particularly when cyclically loaded. For thermally cut surfaces on which

welds will be placed, the cut quality may affect the weld quality and integrity. Smooth, planar surfaces are the goal. Mechanically guided cuts are typically smooth enough so that no repairs are required. Minor flaws can be repaired by grinding. Larger defects can be repaired by welding. AWS D1.1 provides limits on the extent of allowable repairs. Also see Section 9.7.2 of this Guide.

Three thermal cutting processes commonly used for structural steel fabrication will be examined, as follows: oxyfuel gas cutting and gouging, plasma arc cutting and gouging, and air carbon arc gouging and cutting.

2.9.1 Oxyfuel Gas Cutting and Gouging

Oxyfuel gas cutting (OFC) is "a group of oxygen cutting processes using heat from an oxyfuel gas flame" (AWS, 2010d). The thermal cutting process relies on combustion of a fuel gas to heat a material to the kindling temperature, followed by the use of a stream of pure oxygen that creates the chemical reaction of oxidation of the metal being severed as shown in Figure 2-34. This reaction releases thermal energy that heats the surrounding material and maintains the high temperature. The pressurized stream of oxygen displaces oxidized material from the cut region, known as the kerf.

A variety of fuel gases may be used for OFC, including acetylene, natural gas, propane, and several proprietary gases that have been developed. OFC can cut any material that can sustain the oxidation reaction, including carbon steel. Materials like stainless steel and aluminum cannot be cut with this process (unless modified) because the oxides form a tightly adherent coating that inhibits continuation of the oxidation process.

Fig. 2-34. Oxyfuel cutting.

An important feature of OFC is that its inherent oxidation reaction releases thermal energy through the thickness of the material being severed. Once a cut has been initiated, it is the thermal energy created by the oxidation process that allows the cut to continue. If, for example, a 4-in. (100 mm) -thick piece of steel is being cut, the process does not require that the thermal energy from the oxyfuel torch be conducted through the thickness. Rather, heating from oxidation occurs through the thickness of the material, immediately adjacent to the cut. This permits OFC to cut steel in excess of 12 in. (300 mm) thick.

OFC is colloquially known as burning, which provides helpful insight into the operation of the process, because oxidization is such a key aspect of it. Another colloquial term associated with OFC, in contrast, is very unhelpful and may be dangerous; welders often refer to the pure oxygen used for cutting as air. The air in the atmosphere is only about 20% oxygen. Pure oxygen supports combustion under conditions where flames may normally be extinguished in an air atmosphere. Compressed pure oxygen, for example, should never be used to blow dirt off dirty clothing.

The basic apparatus for OFC can be used for preheating or welding simply by making a minor change to the torch assembly. With a change in the nozzle, the same oxyfuel gas cutting apparatus can be used to gouge. U-groove weld details can also be prepared with oxyfuel gouging.

For primary cutting in a fabrication shop, OFC is typically mechanized, often with multiple torches on large cutting tables. Bevels on members to be joined with groove welds are also typically cut with mechanized systems, improving the quality of the cut while lowering costs.

2.9.2 Plasma Arc Cutting and Gouging

Plasma arc cutting (PAC) is defined in AWS A3.0, Figure 2-35, as "an arc cutting process employing a constricted arc and removing molten metal with a high-velocity jet of ionized gas issuing from the constricting orifice" (AWS, 2010d). When gases are exposed to an arc under constricted conditions, an electrically conductive, extremely hot plasma gas is created. The plasma heats the work, and the high-velocity gas mechanically expels the molten metal out of the kerf. PAC requires the use of a special plasma arc cutting power supply that may superficially look like an arc welding power supply, but the nature of the output is significantly different. A special PAC cutting torch is also required.

A chief advantage of plasma arc cutting is that it can be used to cut materials that cannot be cut with OFC. PAC can be used to cut any electrically conductive material, including

carbon and low-alloy steel, stainless steel, aluminum, and copper. PAC cuts steel that is less than ¾ in. (20 mm) thick faster than OFC, offering productivity advantages.

PAC does not involve the oxidation reactions associated with OFC, and this constitutes a major limitation of PAC when it is applied to thicker sections of steel such as 2 in. (50 mm) or greater. All the thermal energy for cutting with PAC must be delivered by the torch, and all the thermal energy must be conducted through the thickness of the member being cut before it can be severed. Also, in order to deliver the energy necessary to cut heavier sections, the output capacities of the PAC power source must be substantially increased, which in turn results in greater equipment costs. Thus, when given a choice, OFC is typically used to cut thicker steel, and PAC is used on thinner steel. Stainless steel and aluminum, of necessity, are cut with PAC, even when in thicker sections. A slight modification to the plasma cutting torch can enable the process to be used for gouging.

2.9.3 Air Carbon Arc Gouging and Cutting

Air carbon arc gouging (CAG) is "a thermal gouging process using heat from a carbon arc and the force of compressed air or other nonflammable gas" (AWS, 2010d). The process involves the heating of base metal by an arc conducted between a copper-coated carbon electrode and the workpiece and a stream of compressed air that mechanically removes the heated metal as shown in Figure 2-36. The process can use the same type of equipment that is used for welding, requiring only the addition of a dedicated torch and a source of compressed air. Metal removal is rapid, and when properly done, a smooth half-cylindrical cavity is created.

The electric arc between the carbon electrode and the base metal heats and melts a localized pool of metal, and the mechanical action of the high-pressure, high-velocity stream of compressed air blows the molten metal away. Some oxidation also occurs as the compressed air contains about 20% oxygen. CAG can be used to prepare U-groove weld details, backgouge double-sided joints, and remove defective weld metal during repair operations. With a slight modification of technique, the process can be used to sever materials, although the cut quality is inferior to OFC and PAC. The smaller size of the electrodes used with CAG allows for metal removal in constricted spaces where other thermal cutting processes may be impossible to use.

2.9.4 Welding on Thermally Cut Surfaces

Properly made thermal cut surfaces are smooth and generally suitable for welding upon without special grinding or other treatment, particularly when the cutting is done with automatic machinery. On the back side of a joint, there may be some dross that needs to be chipped or ground away. Improper cutting procedures and techniques, however, may result in notches, gouges and cracks on the thermally cut surface; such imperfections should be repaired before welds

Fig. 2-35. Plasma arc cutting.

Fig. 2-36. Arc air gouging.

are deposited on the defective surface. Minor imperfections can be repaired by grinding. More significant repairs may require welding (see Sections 9.7.2 and 15.10 of this Guide).

Oxyfuel cut surfaces have slightly enriched carbon contents as compared to the base metal content. During the oxidation process, some of the carbon from the steel that was formerly in the kerf is pushed out and on to the cut surface. This slight carbon increase is normally inconsequential on lower strength, lower carbon content steels. However, for higher carbon steels, the further increase in carbon may lead to cracking on the surface.

Plasma cut steel may have a nitrogen-enriched surface because the plasma cutting gas typically contains nitrogen (whether pure nitrogen or air is used). Ironically, more nitrogen is introduced when air is used as the plasma gas because the presence of oxygen increases the solubility of nitrogen in steel. Sometimes, welds made on plasma cut surfaces will result in porosity. Grinding the plasma cut surface before welding will typically solve this problem.

Under most conditions, proper gouges made with air carbon arc gouging can be welded upon without any grinding. Backgouged weld joints are usually back welded without grinding. However, when the operator inadvertently touches the work with the copper-coated carbon electrode, pieces of carbon can be left behind, or the steel may be locally enriched with carbon. Copper deposits are sometimes left behind as well. Under these conditions, localized grinding to eliminate the localized contamination is needed.

2.10 WATER JET CUTTING

Water jet cutting can be used to sever steel (and many other materials) without creating a heat affected zone that is characteristic of the thermal cutting methods. The process is automated and delivers an accurately cut surface with very high quality albeit at a higher cost than thermal cutting alternatives. For higher strength steels and for specialized applications, water jet cutting has been used for structural application.

Water jet cutting relies on a highly pressurized, highly focused stream of water, often with some type of added abrasive powder. It can cut steel, stainless steel, aluminum, paper, cardboard, glass, and a host of other materials. While distortion from thermal cutting may be a challenge, water jet cutting is free from this concern.

Although AWS D1.1 is silent on the topic of water jet cutting, if the economics make sense, there is no reason to be concerned about welding on surfaces cut with water jets.

Shop welding with FCAW-G.

Chapter 3
Welded Connection Basics

3.1 JOINTS

When pieces of steel are brought together to form a joint, they assume one of the five configurations presented in Figure 3-1. Of the five, butt, T-, corner and lap joints are common in steel building construction. Butt joints include column splices and flange splices on plate girders. T-joints have varied applications, including single-plate shear connectors to columns, gussets to beams, beams to columns, and columns to base plates. Corner joints are represented by the outside seams on built-up box column sections. Examples of lap joints include coverplates on rolled beams, angles to gusset plates, and clip angles to beam webs. Edge joints are more common for sheet metal applications. Joint types merely describe the relative positioning of materials; the joint type does not imply a specific type of weld.

3.2 WELD TYPES—GENERAL

Welds may be placed into four major categories: complete-joint-penetration (CJP) groove welds, partial-joint-penetration (PJP) groove welds, fillet welds, plug welds and slot welds, as shown in Figure 3-2. Groove and fillet welds are of primary interest for major structural connections. The most common use of plug and slot welds in structural applications is for joining the center of large web doubler plates to deep wide-flange members (fillet welds are typically applied around the perimeter).

Terminology associated with groove and fillet welds is illustrated in Figure 3-3. Of primary interest to the designer is the dimension noted as the throat. For PJP and fillet welds, the throat is theoretically the weakest plane and, therefore, is one of the factors that controls the design of a welded connection that uses these welds.

3.3 COMPLETE-JOINT-PENETRATION GROOVE WELDS

A CJP groove weld is "a groove weld condition in which weld metal extends through the joint thickness" (AWS, 2010d). The size of the weld is equal to the thickness of the thinner plate that it joins as shown in Figure 3-4. In the past, these welds were known as complete penetration (CP) welds and, before that, full penetration (FP) welds. They are often referred to as full-pen welds. For statically loaded structures, CJP groove welds develop the full tensile and shear strength of the attached material, the base metal will control the strength of the connection when matching strength filler metal is used.

CJP groove welds may be applied to butt, T- and corner joints. They are often required in butt joints loaded in tension. When butt joints are loaded in compression, and when T- and corner joints are loaded in shear, design requirements rarely justify the use of CJP groove welds.

The prequalified CJP groove weld details listed in AWS D1.1 typically require steel backing if made from one side and backgouging if made from two sides (see Section 3.3.1 of this Guide). These measures are intended to ensure complete fusion throughout the thickness of the material being joined. For CJP groove weld details welded from one side without steel backing, welding procedure qualification testing is required to prove that the full throat is developed and an acceptable back-bead is achieved. Included in this category are groove welds made with no backing (i.e., open root joints) and groove welds made with nonsteel backing, such as copper, ceramic, flux and other nonfusible materials. A special exception to this is applied to tubular connections, for which CJP groove welds may be made from one side without backing.

In AWS D1.1:2015, an alternative to the preceding regarding prequalified welding procedure specifications (WPS) and required steel backing was first offered. The alternative permits the use of copper backing with prequalified WPS when the following conditions are met:

- The prequalified joint detail does not contain steel backing or spacers (i.e., the joint is normally a double-sided joint).
- The joint is backgouged (as would be the case for a prequalified double-sided joint).
- The backgouged joint is backwelded.

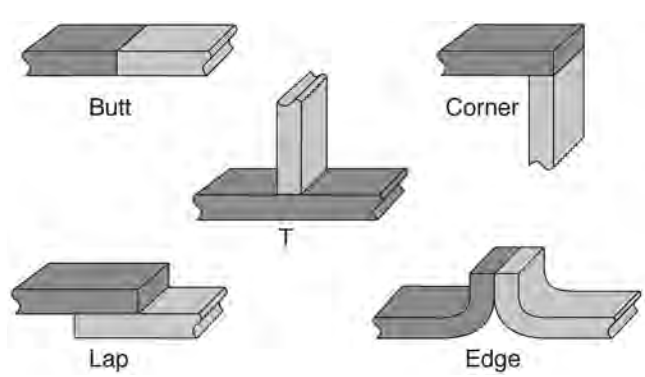

Fig. 3-1. Joint types.

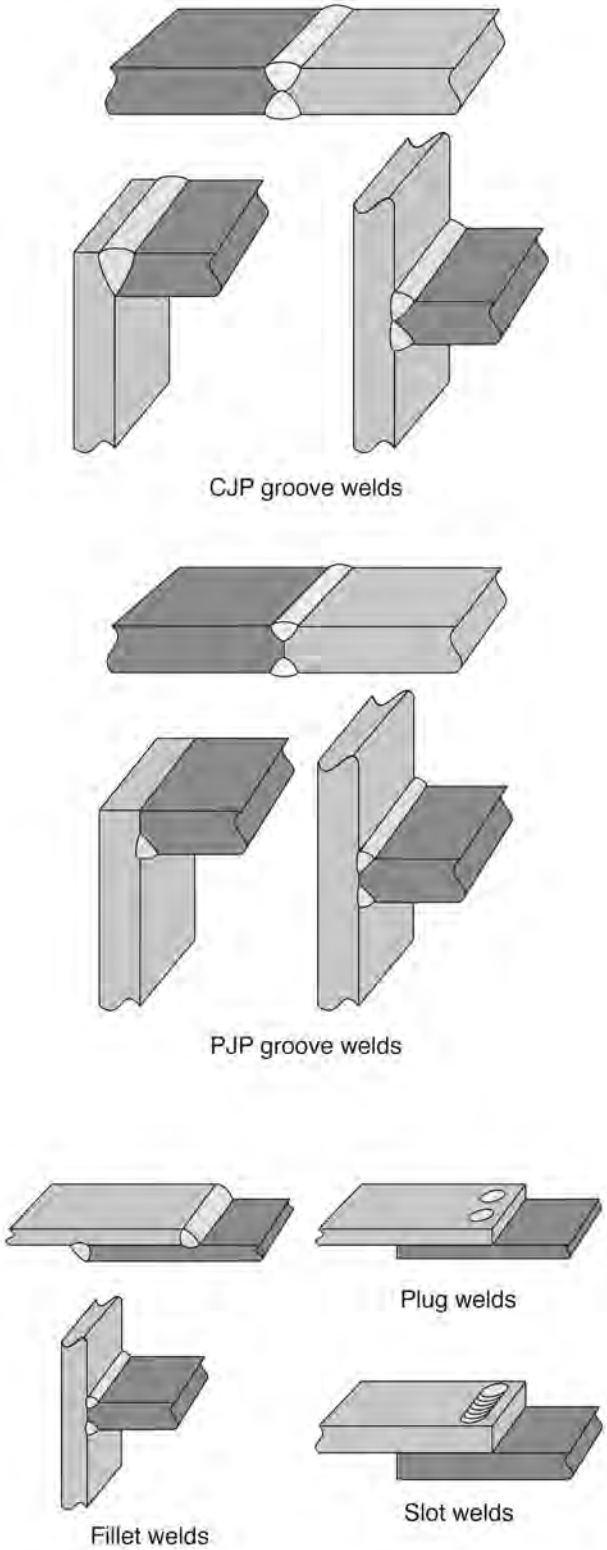

Fig. 3-2. Weld types.

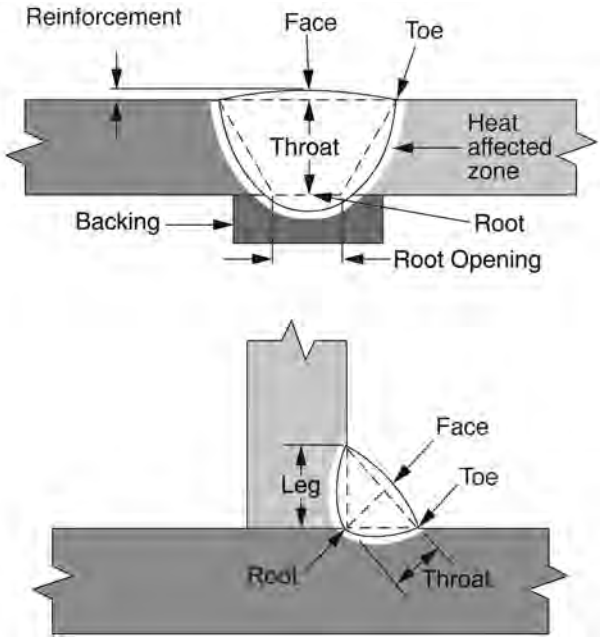

Fig. 3-3. Weld terminology.

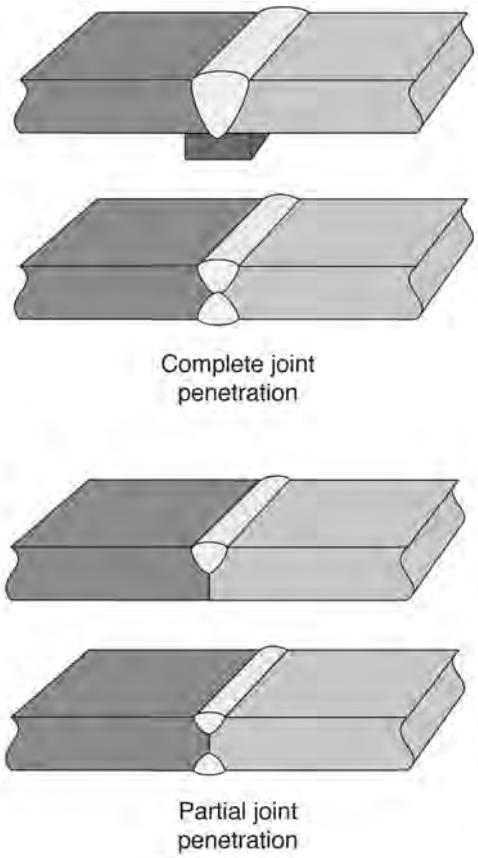

Fig. 3-4. Complete-joint-penetration groove welds and partial-joint-penetration groove welds.

As described previously, the copper backing precluded melt-through of liquid metal, but the intent is not to provide a quality back-bead; backgouging and backwelding of the joint ensures root integrity.

CJP groove welds made from two sides require backgouging before the second side is welded, when prequalified WPS are to be used. Backgouging is defined as "the removal of weld metal and base metal from the weld root side of a welded joint to facilitate complete fusion and complete joint penetration upon subsequent welding from that side" (AWS, 2010d). While it is typical to use air carbon arc gouging (CAG) to backgouge joints, the formal definition does not preclude other techniques, such as grinding. However, cost concerns generally favor the use of CAG. The backgouging operation provides the opportunity for visual confirmation that any unfused metal in the root of the first root pass has been removed before the second root pass is deposited.

Surface irregularities in the gouged groove should be removed by grinding to ensure the resultant cavity will be conducive to good welding. The overall profiles of gouged cavities should be generally similar to U-groove geometries.

AWS D1.1 does not require backgouged joints to be ground before welds are deposited on arc gouged surfaces. It is possible, however, for the welder to inadvertently touch the gouged surface with the carbon electrode, leaving behind either carbon or copper deposits; such surfaces should be ground. Also, while not a D1.1 requirement, grinding of arc gouged surfaces on steel with a specified minimum yield strength of greater than 70 ksi (485 MPa) may be prudent, eliminating any potentially hardened surfaces before welding is performed.

While prequalified two-sided CJP groove welds require backgouging, the backgouging operations can be eliminated when the WPS is qualified by test.

CJP groove welds develop the full strength of the connected material when the welds are full length and made with matching strength filler metal (see Section 3.10 of this Guide). Therefore, no design calculations are required when CJP groove welds are used in statically loaded structures. The simple specification of CJP in the tail of the welding symbol is sufficient to ensure that when fabricated according to the applicable standards, the weld will develop the strength of the connected material. The simplicity of specifying CJP groove welds has led to abuse; sometimes CJP groove welds are specified for situations where they are not required. Perhaps the most commonly abused case is that of longitudinal welds on built-up beam and column sections. These welds are typically loaded in shear, which rarely requires the strength of CJP groove welds. Fillet welds or PJP groove welds are usually better, lower-cost options for this case. A notable exception to this general principle involves the design of longitudinal welds on built-up crane girders, where the rail bears directly on the top flange above the web. CJP groove welds may be required for such applications not because of shear, but due to the high, direct compressive loads.

CJP groove welds can be more easily inspected with nondestructive testing (NDT) methodologies than can other weld types. Depending on the joint involved (butt, corner, T), the whole volume of weld metal in a CJP groove weld can be inspected with radiographic testing (RT) or ultrasonic testing (UT)—see Chapter 10 of this Guide. For certain critical connections, it may be prudent to use a CJP groove weld simply because it provides the ability to perform a volumetric inspection. However, where CJP groove welds are not required, alternative weld types should be considered along with appropriate in-process visual inspection, perhaps enhanced with the use of dye penetrant (PT) or magnetic particle testing (MT).

CJP groove welds loaded in tension require the use of matching strength filler metal (see Section 3.10 of this Guide). When loaded in compression, slightly undermatching filler metal [up to 10 ksi (70 MPa)] is permitted, although in most situations, matching material is used. When loaded in shear, AISC *Specification* Table J2.5 requires the use of matching strength filler metal; however, note "c" to that table permits the use of undermatching filler metal if the connection is designed for this condition. CJP groove welds subject to parallel loading may use matching or undermatching filler metal.

3.3.1 CJP Groove Weld Backing

Backing is defined as "a material or device placed against the back side of the joint adjacent to the joint root…to support and shield molten weld metal. The material may be partially fused or remain unfused during welding and may be either metal or nonmetal" (AWS, 2010d). Examples of backing are shown in Figure 3-5. Backing is covered in detail in Section 4.2.3 of this Guide.

3.3.2 Single-Sided versus Double-Sided Welds

The selection of single-sided versus double-sided CJP groove welds is typically based upon issues of access, distortion control and economy. If access to both sides of the joint is impractical or impossible, single-sided welds will be required. The effect of this topic on distortion is discussed in Chapter 7, and the economic issues are covered in Section 17.3.3 of this Guide. Single-sided, prequalified CJP groove weld details will require the use of steel backing, and left-in-place backing may introduce notch effects in the weld root depending on the joint type.

3.3.3 Groove Weld Preparations

A variety of groove weld preparations are possible for CJP groove welds as shown in Figure 3-6. Preparations are

necessary because, except for thin materials, the penetration of the welding processes is typically not sufficient to obtain the depth of fusion required for the needed weld strength. Depending on the welding process, sections from ¼ to ⅝ in. (6 to 16 mm) may be joined with square edge preparations using prequalified WPS.

For most structural steel applications, therefore, some type of joint preparation is required. The easiest preparations to make and the most commonly applied involve planar surfaces—for example, V and bevel groove weld types. The curved surfaces associated with the U- and J-groove preparations are more costly to prepare because they typically involve machining or air-arc gouging. The curved surface details usually require less weld metal in order to obtain a weld of the same strength as the planar surface alternatives.

When properly detailed and welded, any of the CJP groove weld details will result in a connection equal in strength to the connected material. As a result, the typical practice in the structural steel industry is for the engineer to leave the selection of the groove weld type and details up to the contractor. Based upon factors such as knowledge and experience, the plan of fabrication and erection, as well as available equipment, the contractor selects the groove weld detail that generates the required quality at the lowest cost.

3.3.4 Spacer Bars

One of the AWS D1.1 prequalified joint details incorporates a joint spacer, or spacer strip, which is "a metal part… inserted in the joint root to serve as a backing and to maintain the root opening during welding" (AWS, 2010d). The joint spacer acts as backing for the first pass on the first side of the joint as shown in Figure 3-7. Before the second side is welded, all the lack-of-fusion planes surrounding the spacer bar are removed by backgouging.

Conceptually, the spacer bar functions as internal backing for a double-sided weld. It allows for a larger root opening, which in turn permits smaller included angles—all while retaining the advantages of a double-sided weld. Groove weld details utilizing the spacer bar have proven to be the lowest cost detail when material thicknesses exceed 4 in.

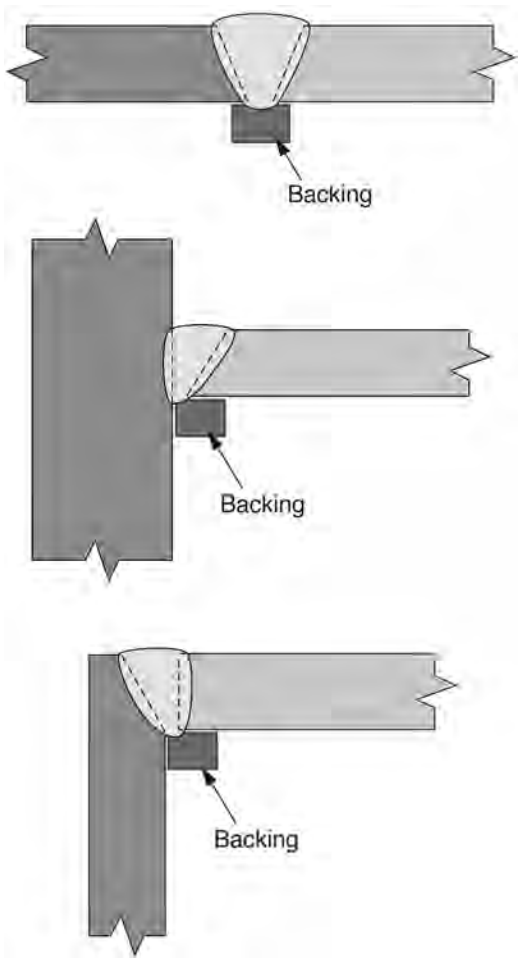

Fig. 3-5. Weld backing.

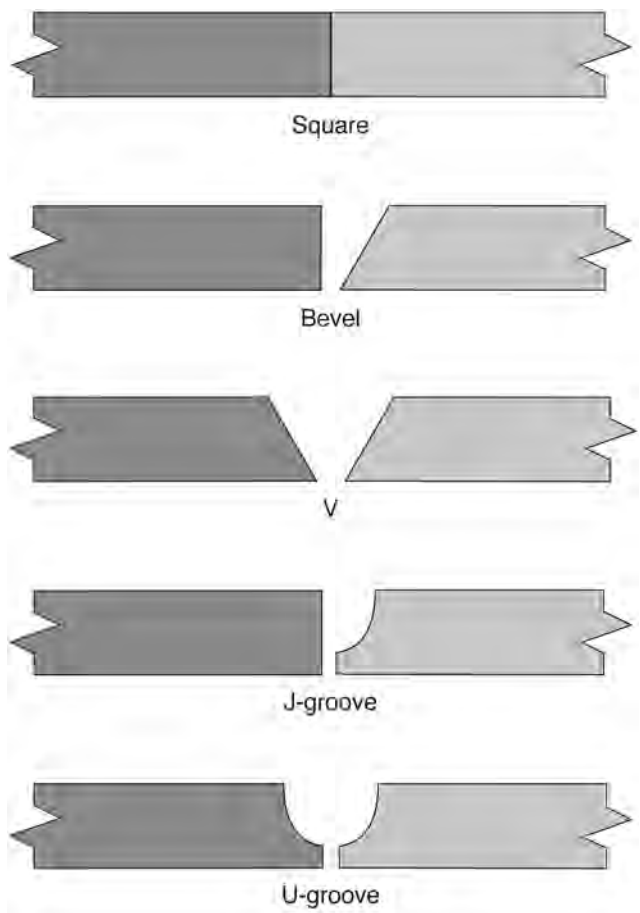

Fig. 3-6. Groove weld preparation.

(100 mm) and where access to both sides of the joint is possible. A detailed comparison is contained in Section 17.3.5 of this Guide.

Groove weld preparations that utilize spacer bars must be made properly. The spacer bar should not be interrupted along the length of the joint and must be made of approved material. When the joint is backgouged, all traces of incomplete fusion between the weld and the spacer bar must be removed before the second side is welded.

3.3.5 CJP Groove Weld Tolerances

CJP groove weld tolerances are defined for prequalified joint details, when applicable, and for general construction. The tolerances for prequalified joint details are contained in AWS D1.1, clause 3, and the general tolerances are contained in clause 5.

AWS D1.1, Figure 3.3, contains two sets of tolerances for each CJP weld type: the as-detailed tolerance and the as-fit tolerance. These tolerances are applied to the nominal dimensions prescribed for the particular detail. The as-detailed tolerances represent permissible deviations from the nominal dimensions that can be specified on drawings. The as-fit tolerances represent permissible deviations the fit steel can make from the dimensions shown on the drawings.

To illustrate the application of these tolerances, AWS TC-U4a-GF will be used, as shown in Figure 3-8. For this particular joint detail, three combinations of root openings, R, and included angles, α, are provided; for this explanation, the combination of $R = 3/8$ in. (10 mm) and $\alpha = 30°$ will be used. The as-detailed tolerances for this joint detail are $R = -0, +1/16$ in. (2 mm) and $\alpha = -0°, +10°$. The dimensions shown on the drawing may have a root opening as small as $R = 3/8$ in. (10 mm), the nominal dimension, but may be as wide as $R = 7/16$ in. (12 mm). The drawing dimension for α may be as tight as 30° but could be as wide as 40°. Notice that the as-detailed tolerances only permit positive additions to the nominal dimensions. Both larger root openings and larger included angles make it easier to obtain complete joint penetration.

For a given set of welding variables shown on a WPS, the contractor may realize that more consistent quality is achieved when the root opening is slightly wider than the nominal dimension. Accordingly, AWS D1.1 provides the latitude for such slight modifications through the permitted as-detailed dimension. If increases beyond those permitted in the prequalified detail are needed, they can be used, but the WPS must be qualified by test. See Section 15.4.3 of this Guide for alternate solutions for joints that exceed allowable dimensions.

For a TC-U4a-GF joint detail, the as-fit tolerances are $R = -1/16$ in. (2 mm), $+1/4$ in. (6 mm) and $\alpha = -5°, +10°$. If the nominal dimensions are shown on the drawing—that is, $R = 3/8$ in. (10 mm) and $\alpha = 30°$—then the fit steel can have a root opening between 5/16 in. and 5/8 in. (8 mm and 16 mm). The included angle can vary from 25° to 40°. The plus or minus tolerance reflects the reality of production variations: parts are sometimes too short and in other cases too long. It is noteworthy, however, that the positive tolerances are larger than the negative tolerances. When root openings and included angles become too small, incomplete fusion may result, violating the design expectation of the CJP groove weld. Excessive root openings and included angles may result in more distortion or higher residual stresses, and they will likely increase welding costs but will not interfere with obtaining complete joint penetration; the more generous positive tolerances reflect the reduced concerns associated with these conditions.

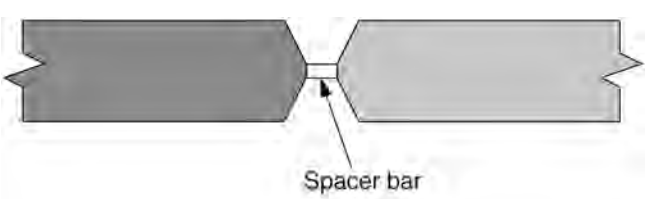

Fig. 3-7. Spacer bar detail.

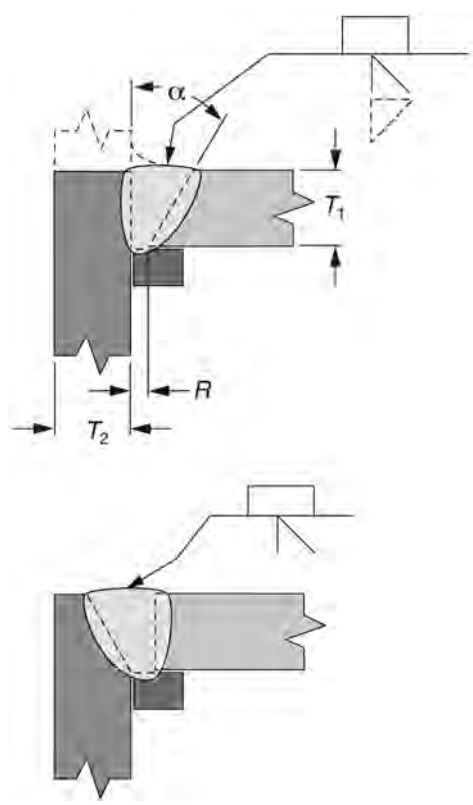

Fig. 3-8. AWS TC-U4a-GF joint details.

The as-detailed and as-fit tolerances are additive. The included angle for the TC-U4a-GF joint detail may be increased from the nominal dimension of 30° by the as-detailed tolerances or +10°, in which case the drawing would show a 40° included angle. In production, the joint could be cut to an angle of 50° when the as-fit tolerance of +10° is applied. Thus, if the as-detailed included angle is 40°, then the production as-fit dimension can be 50°. But, if the as-detailed included angle is 30°, then the production as-fit dimension of 50° is out of specification. Yet, there is no physical difference in the joint. Under such circumstances, the most practical solution may be to change the as-detailed dimension on the drawings and permit the joint to be welded without any additional corrective measures.

AWS D1.1, Figure 5.3, provides a summary of fit-up tolerances that are applicable to all fabrication. These tolerances are generally the same as those of the prequalified joint details but are applicable to nonprequalified joint details.

3.4 PARTIAL-JOINT-PENETRATION GROOVE WELDS

A PJP groove weld is "a groove weld in which incomplete joint penetration exists" (AWS, 2010d). This weld type has a throat dimension less than the thickness of the materials it joins as shown in Figure 3-4. PJP groove welds can be applied to butt, corner and T-joints. The definition uses the phrase "incomplete joint penetration," which is unfortunate because the phrase may imply this is an undesirable condition when incomplete joint penetration is an inherent characteristic of PJP groove welds. Such welds are commonly used for column splices where the butt joint is usually loaded in compression or with only limited tension. PJP groove welds are also frequently used in corner joints of built-up box columns. Both fillet welds and PJP groove welds can be used in T-joints and inside corner joints. The relative economic advantages of both are discussed in Section 17.2.2 of this Guide.

3.4.1 Effective Throats for PJP Groove Welds

In a PJP groove weld, the effective throat dimension delineates between the depth of groove preparation and the probable depth of fusion that will be achieved as shown in Figure 3-9. When submerged arc welding (which typically provides deep penetration) is used and the weld groove included angle is 60°, AISC *Specification* Table J2.1 allows the designer to rely on the full depth of joint preparation to be used for delivering the required throat dimension. AWS D1.1, Figure 3.3, shows the effective throat and required depth of groove preparation for various prequalified PJP groove weld details as a function of the welding process, position of welding, and included angle.

When processes with reduced penetration capability are used, such as shielded metal arc welding, or when the groove angle is restricted to 45°, it is unlikely that fusion to the root of the joint will be obtained. Because of this, Table J2.1 assumes that ⅛ in. (3 mm) of the PJP groove weld joint will not be fused. Therefore, for such conditions the effective throat is assumed to be ⅛ in. (3 mm) less than the depth of preparation. This means that for a given included angle, the depth of joint preparation must be increased to offset the loss of penetration.

The effective throat dimension for a PJP groove weld has been traditionally abbreviated as *E*. The required depth of joint preparation is designated by *S*. Because the engineer does not normally know which welding process a fabricator will select, nor the position in which welding will be performed, the design drawing need only show the effective throat, *E*, dimension. The fabricator chooses the welding process, determines the position of welding, specifies the included angle, and selects the appropriate *S* dimension, which will be shown on the shop drawings. In most cases, both the *S* and the *E* dimension will be stipulated on the welding symbols of shop drawings with the effective throat dimension shown within parentheses.

In 2012, AWS A2.4 (AWS, 2012d) changed the abbreviations used for the effective throat and depth of bevel. Rather than using *E* and *S,* respectively, the new abbreviations were changed to *S* and *D*, where *S* refers to size and *D* refers to depth. AWS D1.1:2015 and the 2016 AISC *Specification* (AISC, 2016d) chose not to adopt the new designation but rather continued with the traditional abbreviations *E* and *S*. In reality, nothing changes in terms of how PJP groove welds

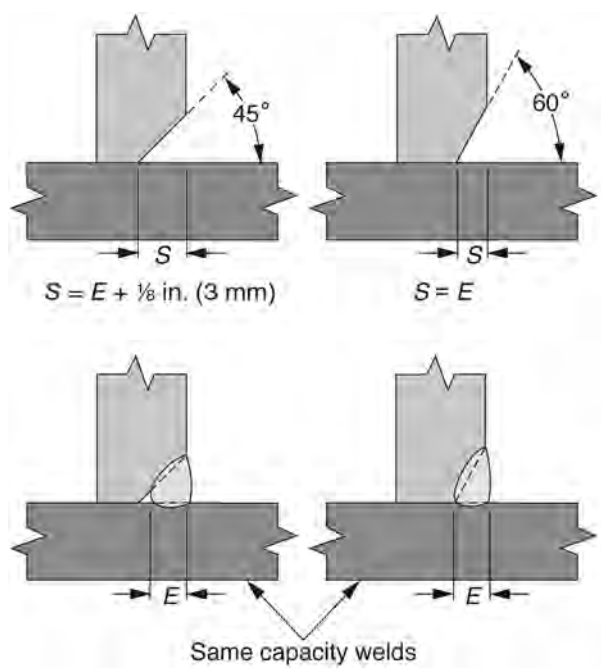

*Fig. 3-9. PJP groove welds: "*E*" versus "*S*."*

are specified or made; the dimension for the effective weld throat is shown on the welding symbol in parentheses, and the depth of bevel is shown to the left of the effective throat.

3.4.2 Minimum PJP Groove Weld Sizes

AISC *Specification* Table J2.3 prescribes a minimum effective throat size for PJP groove welds, as a function of the thickness of the thinner of the parts joined. This table is not based on assumed minimum design loads but, rather, deals with welding-related concerns. Additionally, Table J2.3 provides some reasonable proportionality between the weld size and the thickness of the base metal. The interaction of fillet weld size and heat input is discussed in Section 3.5.1 of this Guide, and the same principles apply to PJP groove welds.

3.4.3 Restrictions on the Use of PJP Groove Welds

Because PJP groove welds do not fully fuse the cross section of the joint, there will always be an unfused plane under the root of the PJP or, in the case of double-sided PJP groove welds, between the two. This has performance and inspection implications. Regarding performance, the unfused plane may create a stress concentration, depending on the direction of loading. When loaded in shear, this stress concentration is of no concern. When subject to cyclic transverse tensile loading, this region must be considered in the design of the connection (see Section 12.3 of this Guide).

Single-sided PJP groove-welded joints should be checked to ensure that rotation about the root of the joint cannot occur, regardless of the loading conditions. Like single-sided fillet welds, single-sided PJP groove welds can readily tear from the root when rotated about this location. Rotation can be prevented by diaphragms or stiffeners or, in some cases, simply by the overall configuration of the member.

The unfused plane in the root of PJP groove welds makes radiographic (RT) and ultrasonic (UT) inspection results difficult to interpret. Neither RT nor UT is recommended for such welds not only because of the interpretation difficulties, but also because nondestructive testing is typically not required for this type of application. In the 2016 AISC *Seismic Provisions*, a new seismic splice detail was introduced that utilized PJP groove welds and also mandated UT for such welds; specialized inspection techniques need to be used when UT is performed on such welds.

3.4.4 Required Filler Metal Strength for PJP Groove Welds

For all PJP groove welds, regardless of direction or type of loading, matching or undermatching filler metal may be used (see Section 3.10 of this Guide).

3.4.5 Flare-V and Flare-Bevel Groove Welds

Flare-V and flare-bevel groove welds are special types of groove welds. A flare-bevel groove weld is "a weld in the groove formed between a joint member with a curved surface and another with a planar surface." Similarly, a flare-V groove weld is "a weld in a groove formed by two curved surfaces" (AWS, 2010d). Figure 3-10 illustrates these two weld types. Corners of HSS create such curved surfaces, as well as do the corners of material bent in press brakes.

The effective throat, E, of these welds is a function of the outside radius, R, of the corner and the welding process. AISC *Specification* Table J2.2 provides the relationships between the radius and the effective throat, unless other effective throat dimensions have been demonstrated by tests. Such tests consist of making a representative weld, cutting it perpendicular to the longitudinal axis, then polishing and etching the cross section so that the effective throat can be determined (AWS D1.1, clause 4.11.5).

The radius on HSS is taken to be $2t$, where t is the thickness of the HSS wall, as shown in Figure 3-11. The actual radius for structural tubing will vary from the assumed value

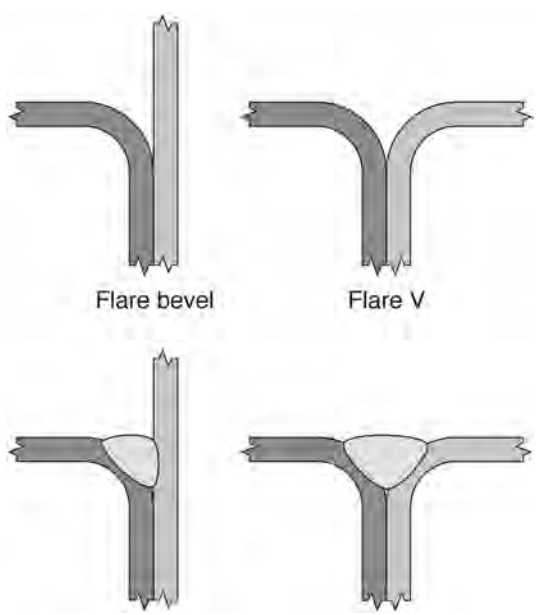

Fig. 3-10. Flare-bevel groove welds and flare-V groove welds.

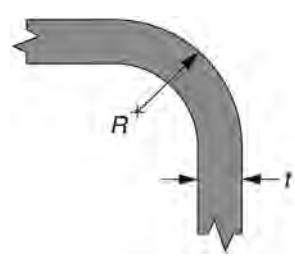

Fig. 3-11. HSS radius, R*, and wall thickness,* t.

of 2*t* and will likely be greater, although smaller dimensions may occur. The nominal radius will vary from mill to mill, in part due to the different means of making rectangular tubing. ASTM A500 prescribes a maximum outside radius of 3*t* but provides no minimum dimension. Steel-forming operations limit the practical smallest radius that is possible. ASTM A1085 has tighter controls on the outside corner radius: for materials up to 0.400 in. (10.2 mm) thick, the radius is 1.6*t* to 3.0*t*, and for materials greater than 0.400 in. (10.2 mm) thick, the radius is 1.8*t* to 3.0*t* (ASTM, 2016).

The throat dimensions shown in AISC *Specification* Table J2.2 assume that the groove is filled flush. The throat of underfilled joints is reduced by the amount of underfill as shown in Figure 3-12. There is no requirement for flare groove welds to be filled flush; if the throat of an underfilled joint is sufficient to transfer the applied loads, considerable economy can be achieved with underfilled joints as compared to flush-filled joints.

The concept of filled flush as applied to flare groove welds is more complicated than it may initially appear. A theoretically flush weld is shown in Figure 3-13(a). For $R = 2t$, the weld face is 4*t* wide. If a weld is made with an actual face width of 4*t* with normal weld reinforcement, the conditions in Figure 3-13(b) will be obtained. However, as shown in Figure 3-13(c), the required throat dimension can be achieved at any point even if the joint is not fully filled. Accordingly, it is not necessary to achieve the conditions shown in Figure 3-13(b); leaving unfilled edges is acceptable as long as the required throat is achieved. There may be conditions, such as for architecturally exposed structural steel (AESS), where full filling is necessary, but a flush condition is not required for structural reasons.

3.4.6 Single-Sided versus Double-Sided Welds

PJP groove welds may be single sided or double sided. The double-sided PJP groove weld always requires less weld metal than the single-sided option of the same strength, and the only cost-related variables that need to be balanced are the joint preparation time and welding time, assuming that access to both sides of the joint is possible. Double-sided PJP groove welds are typically advantageous for controlling

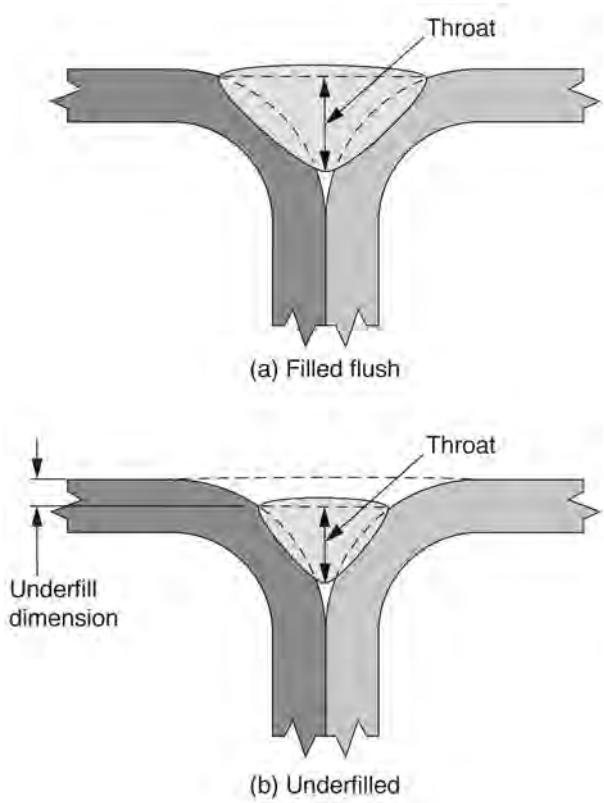

Fig. 3-12. Determining effective throat dimensions.

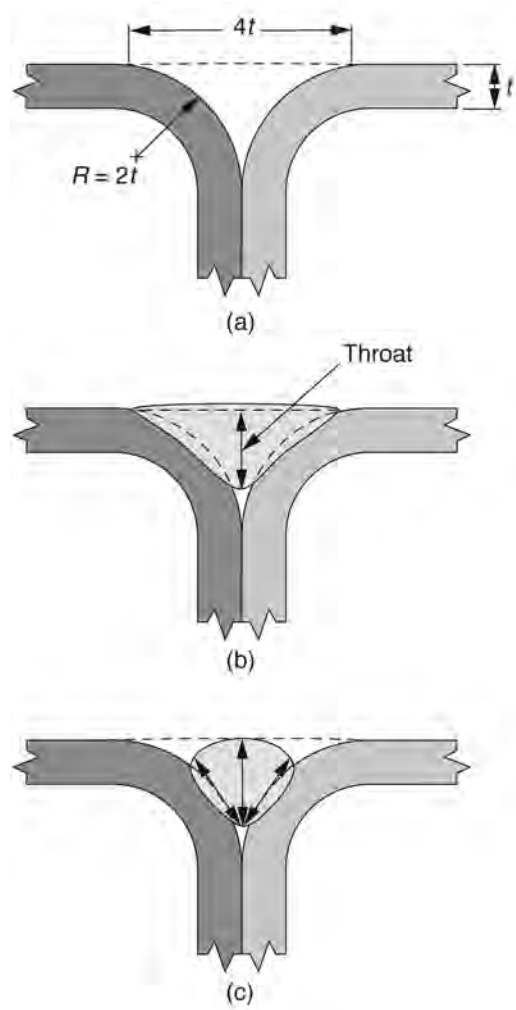

Fig. 3-13. Comparison of filled flush conditions.

distortion. For small weld sizes, single-sided PJP will be more cost effective because joint preparation costs will be less, even though more weld metal is required. Double-sided PJP groove welds better protect the weld root.

3.4.7 PJP Groove Weld Details

The engineer need only specify the required effective throat dimension, *E*, leaving the contractor the option of selecting the required depth of preparation, *S*, appropriate for the welding conditions, as well as selecting the type of PJP groove weld detail (V, bevel, J or U). Unless the weld size is very large, most PJP groove welds are most economically made with the planar preparations associated with V and bevel groove welds.

3.4.8 PJP Fusion Zone Check

There are two limit states that must be checked for connections made with PJP groove welds: the weld throat and the fusion zone. AISC *Specification* Table J2.5 refers to these zones as weld and base. The check on the base metal is required because, unlike fillet welds, the fusion zone size for PJP groove welds is often the same size as the weld metal throat size. Also see Sections 3.11.1 and 3.11.2 of this Guide.

3.4.9 PJP Groove Welds and Loading Direction

When fillet welds are loaded perpendicular to their longitudinal axis, the available strength of the weld can be increased by 50% as compared to longitudinally loaded fillet welds (see Section 3.5.6 of this Guide). For PJP groove welds, no increase in available strength is permitted. Unlike fillet welds where the failure plane changes with the direction of loading, PJP welds fail along the plane that represents the least dimension from the weld root to the weld face, regardless of loading direction (Gagnon and Kennedy, 1987).

3.4.10 PJP Groove Weld Tolerances

The tolerances for PJP groove welds are addressed in a similar manner as is done for CJP groove welds. See Section 3.3.5 of this Guide for a discussion of how AWS D1.1 deals with CJP groove weld tolerances, which also generally applies to PJP groove welds.

3.5 FILLET WELDS

A fillet weld is "a weld of approximately triangular cross section joining two surfaces approximately at right angles to each other" (AWS, 2010d). Fillet welds by themselves do not fully fuse the cross-sectional areas of parts that they join, although it is usually possible to develop full strength connections with fillet welds alone. Fillet welds can be applied to T-, corner and lap joints. Fillet welds may be used to add strength to PJP groove welds and may be used to provide for a more gradual contour to both PJP and CJP groove welds in T- and corner joints. When used in conjunction with CJP groove welds, the strength of the fillet weld is not added to that of the CJP groove weld.

Fillet welds are used extensively in structural steel fabrication and are often used to join single-plate shear connections to columns, gussets to beams and columns, stiffeners to webs, and lightweight columns to base plates, as well as many other examples. The longitudinal seams on plate girders are usually made with fillet welds.

The size of a fillet weld is specified in terms of the leg size, even though the strength of the weld is theoretically controlled by the throat size. The throat of an equal-legged fillet weld, t_w, can be found as follows:

$$t_w = w\left[\cos\left(\frac{\psi}{2}\right)\right] \tag{3-1}$$

where

w = fillet weld leg size, in. (mm)

ψ = dihedral angle, degrees

For the common situation of 90° T-joints, the throat dimension is found by multiplying the leg size by 0.707 (i.e., cos 45°).

Because fillet welds do not fuse the cross section of the joint, there will always be an unfused plane under the root of a single-sided fillet or, in the case of double-sided fillets, between the two fillet welds. Single-sided fillet welded joints should be checked to ensure that rotation about the root of the joint cannot occur, regardless of the loading conditions. Rotation can be prevented by diaphragms or stiffeners or, in some cases, simply by the overall configuration of the member. There is no prohibition against single-sided fillet welds in the AISC *Specification* or AWS D1.1, and they are routinely used in the manufacture of building components for metal buildings. There are some restrictions, however, for seismically loaded moment connections. AISC *Prequalified Connections* (AISC, 2016b) requires that double-sided fillet welds be used at the end of the member extending at least one beam depth or three times the flange width from the end (Meng, 1996).

Inspection of fillet welds with RT and UT is typically not practical, for multiple reasons. The triangular cross section alone is problematic for these inspection techniques, and the naturally occurring lack of fusion plane will always confuse interpretation of the results. Large fillet welds can be inspected with UT using specialized techniques. Magnetic particle testing (MT) or dye penetrant testing (PT) can also be used to inspect fillet welds.

For all fillet welds, regardless of direction or type of loading, matching or undermatching weld metal may be used (see Section 3.10 of this Guide).

3.5.1 Minimum Size of Fillet Welds

AISC *Specification* Table J2.4 specifies minimum weld sizes that are a function of plate thickness. These are not design-related requirements but are used to address welding-related concerns that involve fusion and cracking.

In order to make a good arc weld, there is a minimum amount of thermal energy that must be introduced into the joint. Failure to do so may result in the deposition of weld metal, albeit without fusion to the base metal. Additionally, when insufficient thermal energy is delivered to the joint, the cooling rate experienced by the weld and the heat affected zone may be such that cracking occurs.

To ensure that a reasonable level of thermal energy is introduced into the joint, AISC *Specification* Table J2.4 requires that a certain minimum weld size be applied, regardless of design loads. This approach is possible because there is a direct relationship between the thermal energy introduced into the joint and the weld size applied to the joint. This assumes, however, that the weld size is applied in a single pass; depositing a series of small weld passes creates the very condition the minimum fillet weld size requirements are attempting to preclude. A note to AISC *Specification* Table J2.4 requires the minimum size fillet weld to be made in a single pass.

Heat input is typically used to directly estimate the amount of thermal energy that is introduced into the joint and is discussed in Section 8.8.9 of this Guide. In order to create a larger weld in one pass, two approaches may be used: higher amperages, I, or slower travel speeds, S_W, must be employed. Notice that either procedure modification results in a higher heat input.

Table J2.4 specifies minimum acceptable weld sizes with the primary purpose of dictating minimum heat input levels. For example, almost independent of the welding process used, a ¼-in. (6 mm) fillet weld will require a heat input of approximately 20 to 30 kJ/in. (0.8 to 1.2 kJ/mm). By prescribing a minimum fillet weld size, these specifications, in essence, stipulate a minimum heat input.

The minimum fillet weld size need not exceed the thickness of the thinner part being joined. In some extreme circumstances, the connection might involve an extremely thick plate being joined to a very thin plate. The AISC *Specification* dictates that the weld need not exceed the size of the thinner part. However, under these circumstances, additional preheat based upon the thicker material may be required.

3.5.2 Maximum Size of Fillet Welds

Both the AISC *Specification* and AWS D1.1 have provisions that specify maximum fillet weld sizes. These provisions are frequently misunderstood and misapplied. Fillet weld size limitations fit into three categories: (1) limitations on the size of fillet weld applied to edges, (2) limitations on the size of fillet welds made in the horizontal position, and (3) limitations on the size of fillet welds on weathering steels when carbon steel electrodes are used.

AISC *Specification* Section J2.2b and AWS D1.1, clause 2.4.2.9, both limit the size of fillet welds deposited on edges of members. These provisions came about because it is possible for welders, particularly when using SMAW electrodes, to melt away the top edge of the member when welding on an edge. This creates a weld with a normal weld toe dimension, but the corresponding weld throat may be much smaller than the designer intended as shown in Figure 3-14.

To preclude this situation, the maximum fillet weld leg size is restricted to the thickness of the material, less 1⁄16 in. (2 mm) when welded on the edge of material greater than ¼ in. (6 mm) thick. By leaving behind a small unwelded portion of the edge, it is possible to confirm that the edge has not been melted and therefore, a weld with a proper throat dimension is achieved. The 1⁄16-in. (2 mm) dimension is not critical; smaller dimensions are permissible provided the weld size is clearly verifiable. Note that this applies only to the situation where welds are applied along edges. Such conditions include lap joints and some corner joint configurations but do not include T-joints as shown in Figure 3-15.

Melting away the top edge is not detrimental to the welded joint, provided that the required throat dimension is obtained and that the localized thickness of the steel is not unduly compromised. For materials less than ¼-in. (6 mm)-thick, this resultant weld throat will likely be adequate even if the edge is melted; thus these maximum fillet weld size provisions apply only to the edges of thicker members.

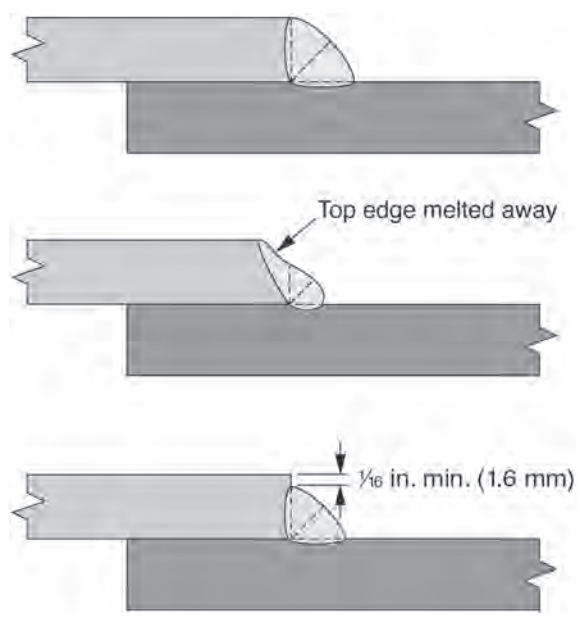

Fig. 3-14. Maximum fillet weld size along the edge.

The common misuse of these provisions comes about when they are applied to situations involving the placement of welds on a surface versus on an edge. Consider a hollow structural section (HSS) column welded to a base plate. A fillet weld may be specified and may be required to develop the full available strength of the HSS wall. Assuming access to the inside of the tube is limited, as is typically the case, the single-sided weld will often need to have a leg size that exceeds the HSS wall thickness. The maximum fillet weld size provisions do not apply in this situation because the weld is not on an edge.

Sometimes the provision for the maximum weld size on edges is misconstrued to suggest that all welds on edges must be made in a single pass. Fillet welds on edges can be made in a single pass or multiple passes. When depositing large welds on the edge of thick plates, the concern about melting of the edge will be proportionally diminished in that only one pass (likely the final pass) has the potential of melting the corner of the plate.

The second maximum fillet weld size provision involves the largest weld that can be made in a single pass. AWS D1.1, Table 3.6, lists the maximum single-pass fillet weld that can be made with prequalified welding procedure specifications using various processes in different positions; for horizontal position welding, this is 5⁄16 in. (8 mm). It is possible for the contractor to qualify the welding procedure by test and make larger weld sizes. As designs permit, it is advisable to limit fillet weld sizes to 5⁄16 in. (8 mm) so as to permit prequalified WPS and to allow for single-pass welding. Unfortunately, this good practice is sometimes misconstrued as somehow prohibiting larger fillet welds—say, ½ in. (13 mm)—which is not the intent; these larger welds can be made, even with prequalified WPS, providing multiple passes are used.

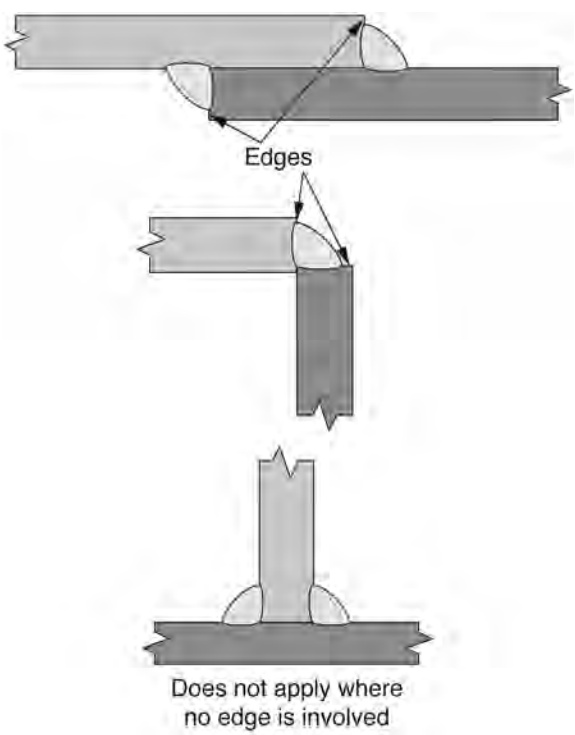

Fig. 3-15. Welds on edges.

The third maximum fillet weld size provision involves welding on weathering steel, such as ASTM A588, and the use of carbon steel electrodes (rather than alloy electrodes that replicate the weathering characteristic of the steel). AWS D1.1, clause 3.7.3.2, lists the maximum fillet weld size that can be made under such conditions: ¼ in. (6 mm) for SMAW and 5⁄16 in. (8 mm) for FCAW, GMAW and SAW. This size limitation only precludes the use of the nonalloyed electrodes for these situations: It does not apply where non-weathering steel is used, where weathering steel is painted, or where alloyed electrodes are used.

The misapplication of the three aforementioned conditions has prompted some designers to conclude that fillet welds of a sufficient size cannot be applied to a given situation, forcing them to use other types of welds. Neither AWS D1.1 nor the AISC *Specification* imposes a maximum fillet weld size as a function of the thickness of the steel, except if it involves welding on edges.

It should be recognized, however, that fillet welds with leg sizes much larger than the thickness of the connected plates are probably indicative of some analytical problem. For example, for steel that is 1 in. (25 mm) thick, it would be odd if the required fillet weld leg sizes were 2 in. (50 mm).

When a weld is to be placed on an edge, and if it is required for the weld to have more available strength than is provided with a fillet weld having a leg size that is 1⁄16 in. (2 mm) less than the thickness of the edge, it is possible to specify an unequal legged fillet, allowing the other leg to be larger. This approach, however, is inefficient; doubling one leg of a fillet weld doubles the amount of weld metal needed but only increases the weld strength by 25%. Also see Section 4.4.8 of this Guide. For situations when a weld with a leg as large as the edge dimension is required, this can be done when the weld is especially designated on the drawings to be built out to obtain full-throat thickness.

3.5.3 Minimum Fillet Weld Lengths

AISC *Specification* Section J2.2b requires that fillet weld lengths be at least four times the leg size. For welds that do not meet this criterion, the effective weld size is to be taken as one-quarter of its length. The four times length provision, combined with the Table J2.4 minimum fillet weld size, results in a minimum weld length requirement as a function of the thickness of the material being joined, although such provisions are not explicitly stated.

3.5.4 Maximum Fillet Weld Lengths

AISC *Specification* Section J2.2b limits the maximum effective length of fillet welds when end loaded. A fillet weld is considered end loaded when a longitudinal fillet weld, parallel to the stress, is used to transmit the load to the end of an axially loaded member. A lap joint with longitudinal fillet welds would be an example. The stress along the length of an end loaded fillet weld is not uniform along the length. The stress in the weld depends on the relative stiffness of the surrounding material. When the weld length is less than 100 times the leg size, the stress can be assumed to be uniform. However, for longer welds, the nonuniform distribution of stress must be considered; this is done with a reduction factor, β.

The following is used to calculate the reduction factor:

$$\beta = 1.2 - 0.002(l/w) \leq 1.0$$

(*Spec.* Eq. J2-1)

$$l_{eff} = \beta l \qquad (3\text{-}2)$$

where

l = actual length of end-loaded weld, in. (mm)

l_{eff} = effective length, in. (mm)

w = size of weld leg, in. (mm)

When the length of the weld exceeds 300 times the leg size, the effective length remains 180*w*, regardless of the actual weld length; increases in the length of the weld beyond 300*w* do not add to the capacity of end loaded fillet welds.

The maximum fillet weld provisions apply only to end-loaded conditions; they do not apply to the long fillet welds that are used to make plate girders, for example. For end-loaded conditions where the reduction factor applies, the 100 times weld size threshold is rarely exceeded, therefore, the reduction factor is often not required. For a 5⁄16-in. (8 mm) fillet, the 100× threshold is 31 in. (780 mm) and the 300× threshold is 93 in. (2300 mm), a dimension that would be rarely encountered for end-loaded conditions (Miller, 1998a).

3.5.5 Intermittent Fillet Welds

An intermittent weld is "a weld in which continuity is interrupted by recurring unwelded spaces" (AWS, 2010d). Intermittent welds may be used to transmit loads and are natural options for lightly loaded connections. The minimum weld length discussed in Section 3.5.3 of this Guide also applies to intermittent fillet welds, but in addition, the minimum length is not permitted to be shorter than 1½ in. (38 mm). For connections subject to cyclic loading, intermittent fillet welds have a low allowable stress range and are typically avoided for this reason (see Chapter 12 of this Guide).

Intermittent fillet welds should never be larger than the minimum prequalified size. If a continuous fillet weld of the minimum leg size provides more strength than is needed for the connection, intermittent fillet welds may be an option. But if a continuous fillet weld of a size larger than the minimum leg size is used, then the weld leg size should be reduced before intermittent fillets are considered.

The maximum spacing between intermittent fillet welds that join plate and shape elements is covered by AWS D1.1, clause 2.12.2. Table 3-1 summarizes these requirements.

In general, two criteria are supplied: a maximum spacing based on the material thickness and an absolute limit on the spacing. For members in general, the spacing provides a reasonable path for the loads to enter into the intermittent fillets. For compression members, the criterion ensures there is no localized buckling of the unsupported members between the intermittent welds.

3.5.6 Longitudinal versus Transverse Fillet Welds

The traditional approach used to design a fillet weld assumes that the load is resisted by the throat of the weld, regardless of the direction of loading. Experience and experimentation, however, have shown that fillet welds loaded perpendicular to their longitudinal axis have an ultimate strength that is approximately 50% greater than the same weld loaded parallel to the longitudinal axis as shown in Figure 3-16. The traditional approach in which direction of loading is not considered is therefore conservative. However, when the direction of loading is considered, smaller fillet welds may be possible, resulting in greater design economy.

The nominal stress permitted on a linear weld group loaded in-plane through the center of gravity is the following:

$$F_w = 0.60F_{EXX}\left(1.0 + 0.50\sin^{1.5}\theta\right)$$

(from *Spec.* Eq. J2-5)

where

F_{EXX} = filler metal classification strength, i.e., specified minimum tensile strength, ksi (MPa)

F_w = nominal unit stress of the weld metal, ksi (MPa)

θ = angle between the line of action of the required force and the weld longitudinal axis, degrees

For parallel loading, θ = 0°, and the parenthetical term in AISC *Specification* Equation J2-5 becomes 1, predicting the same nominal unit stress that has been traditionally permitted. For perpendicular loading, θ = 90°, and the parenthetical term becomes 1.5, permitting the increased nominal unit strength.

Along with the increase in strength of welds loaded perpendicular to their length, there is a decrease in the deformation capacity before failure as shown in Figure 3-17. If significant post-yield deformation capacity is desired, the

Table 3-1. Maximum Spacing for Intermittent Fillet Welds: Static Loading						
Connected Material Form(s)	**Member Type**	**AWS D1.1 Clause**	**Base Material Type**	**Base Metal F_y, ksi (MPa)**	**The greater of, in. (mm)**	
Plate to other (i.e., plate to plate or plate to shape)	General	2.12.2.1	Any except unpainted weathering	Any	24t	12 (300)
		2.12.2.3	Unpainted weathering	Any	14t	7 (180)
	Compression members	2.12.2.2	Any except unpainted weathering	36 (250)	21.1t	12 (300)
				50 (345)	17.9t	
				60 (415)	16.3t	
				70 (485)	15.1t	
				100 (690)	12.6t	
				Any	$\left(0.730\sqrt{\frac{E}{F_y}}\right)t$	
		2.12.2.3	Unpainted weathering	Any	14t	7 (180)
Shape to shape	General	2.12.2.1	Any except unpainted weathering	Any	—	24 (600)
		2.12.2.3	Unpainted weathering	Any	14t	7 (180)

longitudinal weld orientation (i.e., parallel loading) would be preferred. Most engineered structures are expected to remain elastic under design loads, so considering only the strength is generally adequate. However, for structures that may be subject to overload conditions where large amounts of plastic deformation that precede failure are desired, the designer may choose to orient the welds parallel to the major applied load (Miller, 1998b).

One of the challenges associated with the option of the directional increase is determining the direction of loading as compared to the weld axis. When loads are multidirectional, the vectorial sum and orientation should be used.

3.5.7 Combined Longitudinal versus Transverse Welds

When longitudinal and transverse welds are combined into a single weld group, the difference in deformation capacity between the two does not permit the full strength of both welds to be achieved simultaneously. Ultimately, the two welds must be strained in a compatible manner, and because the load/deformation curves are nonlinear and unique, it is difficult to determine how much capacity will be contributed by each element of the combination.

The AISC *Specification* addresses this issue by permitting the use of the greater of the following:

$$R_n = R_{nwl} + R_{nwt} \qquad (\textit{Spec.}\ \text{Eq. J2-6a})$$

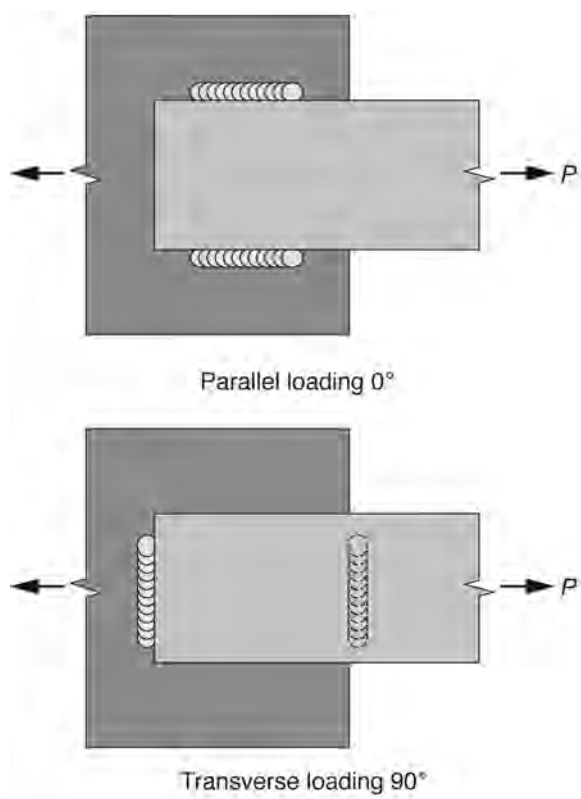

Fig. 3-16. Longitudinal and transverse fillet welds.

$$R_n = 0.85R_{nwl} + 1.5R_{nwt}$$

(*Spec.* Eq. J2-6b)

where

R_{nwl} = total nominal strength of longitudinally loaded fillet welds, kips (N)

R_{nwt} = total nominal strength of the transversely loaded fillet welds, without taking into account the 50% increase as discussed previously, kips (N)

The relative proportioning of the transverse versus the longitudinal weld, both in terms of length and throat size, will determine which of the two equations results in a larger value. For welds of the same leg size, whenever the transverse weld is at least one-third of the length of the longitudinal weld, the second equation will generate a higher value.

3.5.8 Fillet Weld Size Tolerance

AWS D1.1, Table 6.1, permits fillet welds to be undersized for up to 10% of the length of the weld as follows:

- For fillet weld leg sizes of 3⁄16 in. (5 mm) or less, weld sizes may be 1⁄16 in. (2 mm) undersized.
- For fillet weld leg sizes of 1⁄4 in. (6 mm), weld sizes may be 3⁄32 in. (2.5 mm) undersized.
- For fillet weld leg sizes of 5⁄16 in. (8 mm) or more, weld sizes may be 1⁄8 in. (3 mm) undersized.

These permitted reductions in weld size result in a theoretical decrease in the weld available strength of less than 4%, assuming that the rest of the weld is of the same size as specified. In many cases, when a weld is smaller in one location, it is larger in another, resulting in some compensation for the undersized portion. For girders, the same table disallows any undersized welds from the welds at the ends of the girder.

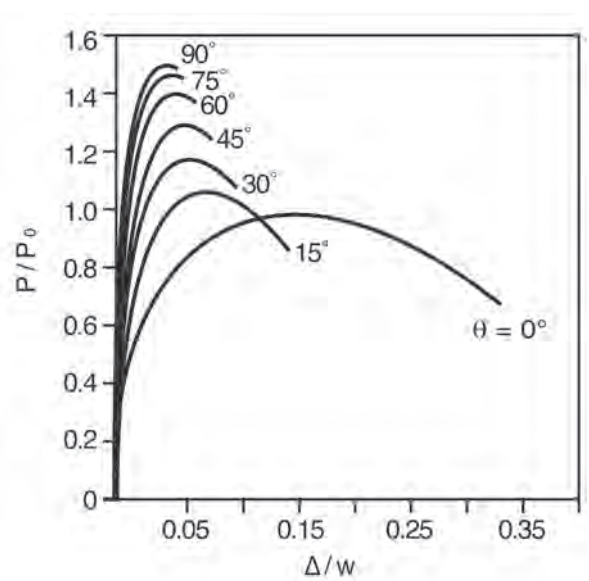

Fig. 3-17. Deformation capacity and weld orientation.

An issue that is not addressed by either the AISC *Specification* or AWS D1.1 involves slightly undersized fillets that exceed the 10% limitation addressed in AWS D1.1, Table 6.1. Logic suggests that if 10% of a 5⁄16-in. (8 mm) fillet weld can be undersized by 1⁄8 in. (3 mm), the same weld should be permitted to be undersized by 1⁄16 in. (1.5 mm) for 20% of the length. While AWS D1.1 does not address this issue, AWS D1.1, clause 6.8, would allow the engineer to accept such a condition. See Section 9.4 of this Guide for a discussion on AWS D1.1, clause 6.8.

A common situation arises when welds are made slightly under the prescribed size for the full length. As an example, consider a 5⁄16-in. (8 mm) fillet weld that has a leg that is 10% undersized for the full length. This directly translates to a 10% reduction in strength. AWS D1.1 would not allow for acceptance of the weld, except as permitted in clause 6.8. There are conditions, however, under which this slightly undersized fillet may be acceptable for the application. Most fillet weld sizes are determined by calculating the required size and rounding up to the next standard weld increment. The fillet weld size may be based on the minimum prequalified size for the thickness of the material, not on the loads transferred through the connection. In such situations, accepting a slightly undersized fillet will typically be better than requiring a difficult to make weld repair.

There are no maximum tolerance limitations for fillet welds.

3.6 PLUG/SLOT WELDS

A plug weld is "a weld made in a circular hole in one member, fusing that member to another member." A slot weld is similarly defined, but involves "an elongated hole in one member…The hole may be open at one end" (AWS, 2010d). Both weld types are uniquely applied to lap joints. Neither is particularly common for structural applications, but plug and slot welds may be used for joining the center areas of web doublers to the column to restrict buckling, particularly when deep columns are involved. Plug and slot welds are restricted to applications requiring transfer of load by shear or to prevent buckling of the lapped parts. They are not used to directly transfer tensile loads.

It is possible to have large circular holes and large elongated slots and to place fillet welds into the holes/slots. These are not plug and slot welds but are simply fillet welds.

The strength of plug and slot welds is determined by the classification tensile strength of the filler metal multiplied by the effective area of the weld, where the effective area is the nominal area of the hole or slot in the plane of the faying surface.

Table 3-2. Structural Welded Joint Limits					
Joint Type	CJP Groove Weld	PJP Groove Weld	Fillet Weld	Groove Weld/ Fillet Weld Combination	Plug and/or Slot Welds
Butt	Yes	Yes	No	No	No
Tee	Yes	Yes	Yes	Yes	No
Corner	Yes	Yes	Yes	Yes	No
Lap	No	No	Yes	No	Yes

Detailing of such simple welds is more complex than one might expect. The dimensional requirements have been established to facilitate uniform fusion to the root of the joint. Specific requirements are outlined in the AISC *Specification* and AWS D1.1 and are not repeated here. However, the diameter of the holes and the width of the slots are required to be greater than the thickness of the member in which they are placed in order to facilitate quality welding. Slot widths and spacing dimensions between such welds are also specified.

Plug and slot welds are required to fill the cavity in which they are placed when the plate thickness is ⅝ in. (16 mm) thick or less. For thicker material, the weld must fill at least one half of the thickness of the material, but not less than ⅝ in. (16 mm).

The use of plug welds in lieu of bolts is discussed in Section 15.7 of this Guide.

3.7 PUDDLE WELDS

Puddle welds, formally called arc spot welds, are made when an electric arc melts through the top sheet of steel in a lap joint, fusing it to the bottom steel component. Puddle welds do not involve welding into a hole as is the case with a plug weld. Such welds are used to join steel decking to supporting steel and are discussed in Section 14.13 of this Guide.

3.8 INTERACTION OF JOINT TYPES AND WELD TYPES

Not all welds may be applied to all details, limiting the weld possibilities for some joint types. For the four joint types that are used in structural applications, Table 3-2 lists the weld possibilities.

3.9 SELECTION OF WELD TYPES

The best weld detail for a specific connection is one that reliably and safely transmits the imposed loads and yet is economical and easily made by the welder. The selection process begins with consideration of the joint type and possible weld types, previously discussed. The next step is to consider the nature of the loads involved, whether tension, compression or shear. Then, the direction of tension or compression loading as compared to the weld axis must be considered. Finally, the magnitude of loading must be compared to the potential strength of each weld.

Table 3-3 can be used to evaluate candidates for various conditions. In some cases, multiple options exist. Typically, cost differences separate the various options, and Chapter 17 of this Guide provides helpful information in that regard.

As used in Table 3-3, the terms *tension*, *compression* and *shear* characterize the loading relative to the joint itself, not the loading on the weld. Ultimately, the throats of all fillet welds are loaded in shear, but the loading on the joint may be in tension. In the case of the loading level, light versus heavy, the magnitude is not precisely or mathematically defined. It is shown simply to illustrate that, should it be impossible to develop the required available strength in the joint with the light loading level, an option with more available strength exists.

Table 3-3 is applicable to the statically loaded situations typical of most building structures. For seismic and fatigue loading applications, other factors must be considered, and these tables may not be applicable.

3.10 REQUIRED FILLER METAL STRENGTH

3.10.1 Possible Strength Relationships

When the specified minimum tensile strength of the weld metal deposited from a specific filler metal is compared to the specified minimum tensile strength of a base metal, three possible relationships exist; compared to the base metal, the weld metal may be lower in strength, about the same strength, or greater in strength. These three relationships are known as undermatching, matching and overmatching. All compare the tensile strength, not the yield strength, and also all compare the specified minimum properties, not the actual properties. Depending on the weld type, direction, and type of loading, matching strength may be required. In other situations, matching or undermatching strength is acceptable. The AISC *Specification* never requires overmatching filler metal, although it is permitted to use filler metal with a strength of up to 10 ksi (70 MPa) higher than matching.

Table 3-3. Weld Load Considerations			
Butt Joints	**Loading Level**	**Normal to the Weld Axis**	**Parallel to the Weld Axis**
Tension	Light	PJP	PJP
	Heavy	CJP	PJP
Compression	Light	PJP	PJP
	Heavy	PJP with bearing considered, CJP	PJP
Shear	Light	—	PJP
	Heavy	—	CJP
Tee Joints	**Loading Level**	**Normal to the Weld Axis**	**Parallel to the Weld Axis**
Tension	Light	Fillet	Fillet
	Heavy	Fillet, PJP, PJP/fillet, CJP	Fillet
Compression	Light	Fillet	Fillet
	Heavy	PJP with bearing considered, CJP	Fillet
Shear	Light	—	Fillet
	Heavy	—	Fillet, PJP, PJP/fillet, CJP
Corner Joints—Outside	**Loading Level**	**Normal to the Weld Axis**	**Parallel to the Weld Axis**
Tension	Light	Fillet, PJP	Fillet, PJP
	Heavy	CJP	Fillet, PJP
Compression	Light	PJP	PJP
	Heavy	PJP with bearing considered, CJP	PJP
Shear	Light	—	PJP
	Heavy	—	CJP
Corner Joints—Inside	**Loading Level**	**Normal to the Weld Axis**	**Parallel to the Weld Axis**
Tension	Light	Fillet	Fillet
	Heavy	Fillet, PJP, PJP/fillet, CJP	Fillet
Compression	Light	Fillet	Fillet
	Heavy	PJP with bearing considered, CJP	Fillet
Shear	Light	—	Fillet
	Heavy	—	Fillet, PJP, PJP/fillet, CJP
Lap Joints	**Loading Level**	**Normal to the Weld Axis**	**Parallel to the Weld Axis**
Shear	Light	—	Fillet, plug/slot
	Heavy	—	Fillet, plug/slot, fillet/plug/slot
Note: For all joint types, loading levels and loading conditions, discretion should be used to preclude rotation about the root of the weld.			

Matching strength filler metal is acceptable for all weld types in all types of loading conditions.

In situations where undermatching filler metal is acceptable, it can be used to limit fabrication-related cracking tendencies. When lower-strength welds are deposited, the stresses created as the weld metal cools and shrinks will be reduced and cracking tendencies are reduced (see Chapter 6 of this Guide). To offset the reduced capacity associated with the use of undermatching filler metal, larger welds may be required.

The strength relationship of the weld metal deposited by a given filler metal compared to the base metal is based upon tensile strength, not yield strength. Normally, for similar given specified minimum tensile strengths, weld metal will have a higher yield strength than the base metal, although there are exceptions to this pattern. Thus, for matching

tensile strengths, the filler metal yield strength is typically slightly higher than the base metal yield strength. This is a desirable relationship as it encourages yielding to occur in the base metal before it occurs in the weld.

The basis for strength comparisons is the specified minimum tensile strength, as would be listed in ASTM for the steel and in AWS A5 filler metal specifications for the weld metal. If the steel, for example, is delivered with a significantly higher (but still within specification) strength and the actual deposited weld metal is near the specified minimum strength, it is possible for the actual weld to undermatch the base metal, even though the combination is deemed matching when based on specified minimum properties.

Although the term has been used for years, welds made with matching strength filler metal never had exactly the same properties as did the base metal, even though this may be implied by the term. Matching strength filler metals almost always exceed the specified minimum properties of the base metal by some margin. For example, ASTM A992 has a specified minimum tensile strength of 65 ksi (450 MPa); E70 filler metal with a specified minimum tensile strength of 70 ksi (490 MPa) is considered matching.

AWS D1.1 lists matching strength, prequalified steel/filler metal combinations (Table 3.1 and 3.2). Normally, the strength of the filler metal classification is within 5 ksi (35 MPa) of the specified minimum tensile strength of the steel, although exceptions exist.

When steels with different strength levels are joined, the basis for matching strength is determined with reference to the lower-strength steel. For example, according to AWS D1.1, clause 3.3, if an ASTM A992 beam is joined to an ASTM A913 Grade 65 column, matching strength filler metal would be E70, based upon the ASTM A992 material.

From a practical viewpoint, nearly all filler metals currently have a specified minimum tensile strength of at least 70 ksi (490 MPa), with a corresponding specified minimum yield strength of 58 ksi (400 MPa). Thus, undermatching is not a practical possibility unless the steel involved has a specified minimum yield strength of 70 ksi (490 MPa) or more. Moreover, there is typically no need to utilize the undermatched filler metal for lower strength steels.

The required strength relationships are defined in AISC *Specification* Table J2.5. This table not only defines where matching strength filler metal is required and where undermatching is permitted, but also states that up to one standard filler metal strength level [10 ksi (70 MPa)] higher may be used.

3.10.2 Matching Filler Metal

Matching strength filler metal is only required by the AISC *Specification* for two situations and both involve CJP groove welds: for CJP groove welds loaded in tension (normal to the weld axis) and for CJP groove welds loaded in shear. A footnote to AISC *Specification* Table J2.5 expands on the second example, identifying where undermatching may be used for CJP groove welds. These exceptions are discussed in Section 3.11.1 of this Guide.

3.10.3 Undermatching Filler Metal

Undermatching filler metal may be used for welds in two general categories: those where the strength of the connection can be increased by making the weld larger (either longer, or with a larger throat, or both) and for CJP groove welds where the connection does not need to develop the full tensile strength of the joined material. PJP groove welds, fillet welds, and plug/slot welds are examples of the former; the strength of these welds can be increased by making the welds larger. For example, the throat dimension for PJP and fillet welds can typically be increased.

AISC *Specification* Table J2.5 shows that for all joints and loading conditions, undermatching filler metal is permitted for all PJP groove welds, fillet welds, and plug/slot welds. When required for the loads transferred through the connection, the throat dimension of PJP groove welds and the leg size of fillet welds typically can be increased to gain additional strength. Additionally, in some situations, the weld length can be increased. For plug and slot welds, the size of the weld can be increased (diameter for plug welds and diameter and length for slot welds), and the number of such welds usually can be increased.

Also identified in Table J2.5 are CJP groove welds where undermatching is permitted, depending on the joint type and the condition of loading. CJP groove welds in butt joints, subject to tension normal to the weld axis, require matching strength filler metal as has been mentioned. The same weld and joint loaded in compression, however, can be made with weld metal with one standard filler metal classification increment [10 ksi (70 MPa)] less than matching. When CJP groove welds are loaded with tension or compression parallel to the weld axis, any degree of undermatching is permitted.

A footnote to Table J2.5 permits undermatching for some CJP groove welds loaded in shear—namely, for the longitudinal seam on built-up shapes where the web-to-flange welds transmit shear. Additionally, the footnote permits undermatching for CJP groove welds loaded in shear and where high restraint is a concern. When undermatching filler metal is used under the conditions of the footnote, the strength of the weld must be verified by determining the shear strength of the CJP groove weld made with the undermatching filler metal.

3.10.4 Overmatching

Overmatching filler metal is never required by the AISC *Specification*. Higher-than-necessary strength levels in the weld metal increase the residual stresses that will be present

after welding and correspondingly increase cracking tendencies in and around the weld.

Filler metals with one standard strength level greater [10 ksi (70 MPa)] are permitted as indicated in note "b" in AISC *Specification* Table J2.5 and should not be considered as overmatching. Matching-strength filler metals for Grade 50 steels such as ASTM A992 and A572 Grade 50 are E70-series filler metals; the footnote permits the use of E80-series materials when welding on these steels. This is important for applications involving ASTM A588 (weathering) steel, as most of the filler metals that contain the required alloy to give to the weld deposit the same atmospheric corrosion resistance fit into this higher-strength classification category. These materials have been successfully used for many years and the slight increase in strength is permitted. The permitted increase is not restricted to A588 steel, although this is a common example.

The most problematic potential consequence of overmatching occurs when welds are designed with an expectation that overmatching weld metal will be used. The strength of any welded connection depends on both the strength of the weld and the strength of the fusion zone. Consider a PJP groove weld that is made as long as the weld joint as shown in Figure 3-18. Because the throat of the weld is the same size as the fusion zone, the location of failure will depend on the location of the weaker material, be it weld metal or base metal. If the weld overmatches the base metal, failure would be expected along the fusion zone.

Next, consider a situation where the PJP throat dimension is determined with an assumption of overmatching filler metal. This will naturally result in a smaller required weld throat dimension than that required if matching material is used. As the throat dimension decreases so does the fusion zone, yet the strength of the base metal remains unchanged. Thus, the connection will fail at a lower-than-expected value because the strength of the base metal will control.

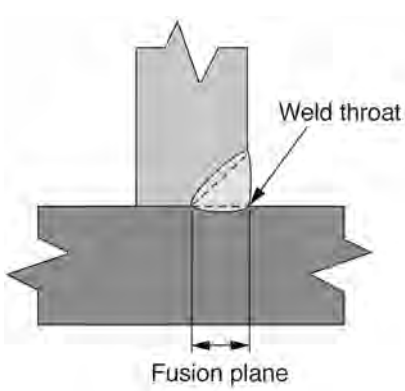

Fig. 3-18. PJP groove weld throat versus fusion plane.

To account for this, AISC *Specification* Table J2.5 requires a check on the available strength of both the weld metal and the base metal (i.e., the fusion zone).

The same problem could occur with fillet welds but is less likely because the legs of fillet welds are larger than the weld throat. In a 90° T-joint, the leg/throat ratio is 1.4:1 (i.e., 1/cos 45°, or 1.41) and it is unlikely that the weld metal will be more than 40% stronger than the base metal. However, for skewed T-joints, as the dihedral angle decreases, the leg/throat ratio also decreases. The Table J2.5 allowance of an increase of only one strength level greater [10 ksi (70 MPa)] effectively eliminates the concern of fusion zone strength problems in fillet welds.

For some nonstructural applications such as pipelines, certain benefits have been postulated for the use of overmatching filler metal, but these approaches have not been applied to structural applications and their relative transferability is uncertain.

3.11 DETERMINING WELD STRENGTH

3.11.1 CJP Groove Welds

AISC *Specification* Table J2.5 identifies four loading conditions that might be associated with CJP groove welds, and shows that the strength of the joint is either controlled by the base metal or that the loads need not be considered in the design of the welds connecting the parts. Accordingly, when CJP groove welds are made with matching-strength filler metal, the strength of a connection is governed or controlled by the base metal, and no checks on the weld strength are required.

When CJP groove welds are made with undermatching filler metal as is permitted for specific joints and loading conditions in accordance with AISC *Specification* Table J2.5, note "c", the weld itself will theoretically control the connection strength. The option of using undermatching filler metal in CJP groove welds is limited to situations where loadings typically result in a limited level of stress on the welds.

3.11.2 PJP Groove Welds

The strength of a PJP groove weld is a function of the effective throat dimension, E; the length of the weld; the classification tensile strength of the filler metal used; and the nominal stress level that may be applied to this type of weld. The strength of the welded connection is assumed to be controlled based on failure through the weld throat in the deposited weld metal. For this weld type, the weld throat and the size of the base metal fused to the weld are the same, as shown in Figure 3-18. PJP groove weld strength is based on the strength of the weld metal, even though failure could theoretically occur in the base metal. The assumption of failure

in the weld metal is valid when matching and undermatching filler metal are used. For these reasons, strength is based on the weld throat.

AISC *Specification* Table J2.5 identifies six loading conditions that might be applied to joints connected with PJP groove welds. Where the full loads must be transferred through the deposited weld metal (i.e., there is no bearing), the nominal stress, F_w, is determined as follows:

$$F_w = 0.60F_{EXX} \tag{3-3}$$

where

F_{EXX} = filler metal classification strength, ksi (MPa)

F_w = nominal stress of the weld metal, ksi (MPa)

To obtain the nominal strength of the weld, F_w is multiplied by the effective area, A_w, which is the product of the effective length and the effective throat, E. The design strength for LRFD is then obtained by multiplying by ϕ, or for ASD, the allowable strength is then determined by dividing by Ω.

3.11.3 Fillet Welds

Fillet welds may be applied to T-, corner and lap joints. Fillet welds may be added to PJP groove welds in T- and inside corner joints, increasing the connection strength. Finally, fillet welds may be added to CJP groove welds in T- and inside corner joints to provide for a more gradual intersection between the members. In such conditions, the strength of a fillet weld cannot be combined with that of the CJP groove weld.

Typically, the surfaces on which fillet welds are applied have a 90° orientation, but this is not always the case; such members may intersect at either a larger (obtuse) or smaller (acute) orientation, as shown in Figure 3-19. Fillet welds sizes are normally specified by prescribing the required leg size, but the theoretical strength is based on the throat dimension.

To cover all these situations, the relationship in Equation 3-1 from Section 3.5 may be used to determine the weld throat:

$$t_w = w\left[\cos\left(\frac{\Psi}{2}\right)\right] \tag{3-1}$$

For the common situation involving a 90° orientation, the relationship of the throat to the leg is that of cos (90°/2), or cos 45°, or 0.707.

The strength of the fillet weld is assumed to be controlled by the throat of the fillet weld. Because the throat is a smaller dimension (unless penetration beyond the weld root is considered, see Section 3.5.6 of this Guide) than the fusion zone, and given the requirements for the use of matching or

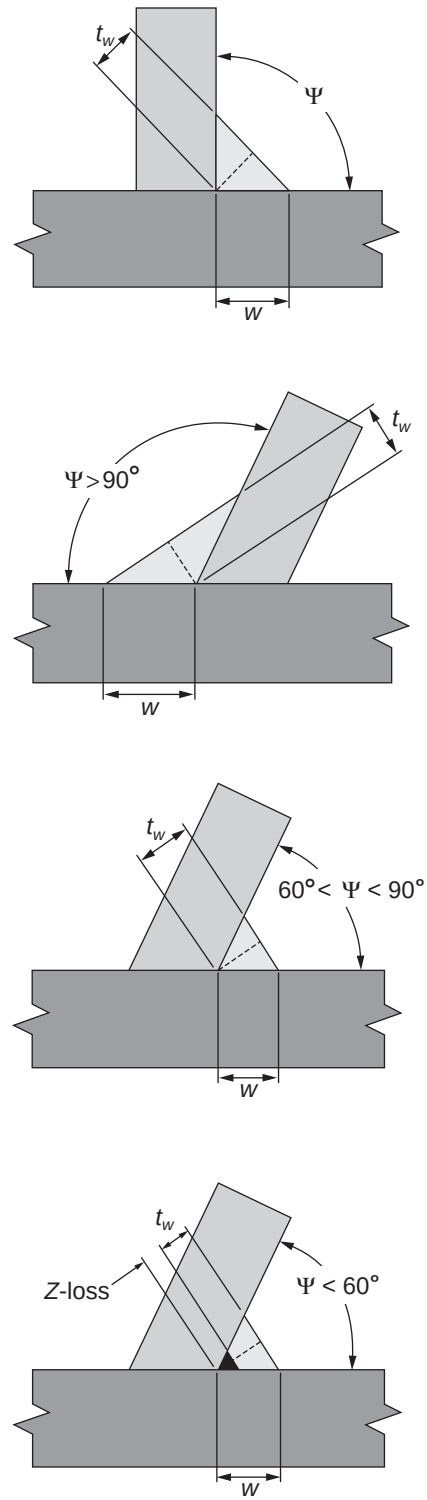

Fig. 3-19. Fillet welds in various T-joints.

undermatching filler metal, checks on the base metal for fillet welded connections are unnecessary.

For acute angles, as ψ decreases and drops below 60°, consistent fusion to the root of the joint becomes unlikely. To account for this, the Z-loss factor is used. Discussed in AWS D1.1, Table 2.2, the Z-loss factor is a function of the welding process and the included angle. The available weld throat is reduced by the amount of the Z-loss. Such losses must be considered as weld throat dimensions are determined.

AISC *Specification* Table J2.5 identifies two sets of loading conditions that might be applied to joints connected by fillet welds. The nominal stress, F_w, is determined with Equation 3-3 as discussed in Section 3.11.2.

To obtain the nominal strength of the weld, F_w is multiplied by the effective area, A_w, which is the product of the effective length and the effective throat. The design strength for LRFD is then obtained by multiplying by ϕ, or for ASD, the allowable strength is then determined by dividing by Ω. The full length of a straight weld, including the weld craters, is included in the effective length.

3.11.4 Plug/Slot Welds

Several plug welds, slot welds, combinations of plug and slot welds, or combinations of these welds with other weld types (often fillet welds) are typically used to share loads. Plug and slot welds are used in lap joints, and when all the welds are on a single common plane, the strength of all the individual welds may be mathematically combined.

AISC *Specification* Table J2.5 identifies one loading condition—shear—that might be applied to joints connected by plug and slot welds. The permitted nominal stress, F_w, is determined with Equation 3-3 as discussed in Section 3.11.2.

To obtain the nominal strength of the weld, F_w is multiplied by the effective area, A_w, which is the nominal area of the hole or slot in the plane of the faying surface. The design strength for LRFD is then obtained by multiplying by ϕ, or for ASD, the allowable strength is then determined by dividing by Ω.

3.12 SPECIFIC REQUIREMENTS FOR VARIOUS JOINTS

For some joints, regardless of the type of weld and weld details utilized, certain principles apply. Joint-specific requirements or concepts that should be considered are listed in the following sections.

3.12.1 Butt Joints

Width and Thickness Transitions

When butt joints are made between members of unequal width or thickness, or both, the joints should be axially aligned unless there is a mechanism present to resist bending.

For cyclically loaded applications, butt joints between members of unequal width or thickness require gradual transitions. Width transitions are accomplished with either a taper or radius cut. Thickness transitions are accomplished by cutting a bevel on the thicker member, although it is permissible to build up the thinner member with weld metal. The details for cyclically loaded butt joints are incorporated into the fatigue details (see Chapter 12 of this Guide).

For seismic applications, butt joints between members of unequal width or thickness also require gradual transitions that can be made like those associated with cyclically loaded connections (see Chapter 11 of this Guide).

Design and detail drawings must show where such tapered transitions are required so that this detail can be incorporated into shop drawings.

3.12.2 Corner Joints

Box Sections and Corner Joints

A common use of corner joints is in box sections. Appropriate weld details for boxes must consider access to the inside of the box. Small boxes where personnel and equipment cannot physically enter the box require that all welding be done outside of the box, eliminating two-sided options. Even when access inside the box is possible, local environmental conditions must be considered. High preheat requirements may preclude internal access; preheating inside a box section may pose a safety problem. Tight enclosures may preclude adequate ventilation for the welder.

Details to resist lamellar tearing should be considered when large welds are applied to corner joints, as discussed in Section 6.4 of this Guide.

3.12.3 Skewed T-Joints

Most T-joints intersect at 90° angles. When the T-joint is skewed, special consideration must be given to both the acute and the obtuse sides of the joint.

On the obtuse side, as the dihedral angle, ψ, increases, the fillet weld throat becomes disproportionately small for the weld leg size, w, and PJP groove welds become a more economical choice, as shown in Figure 3-20. On the acute

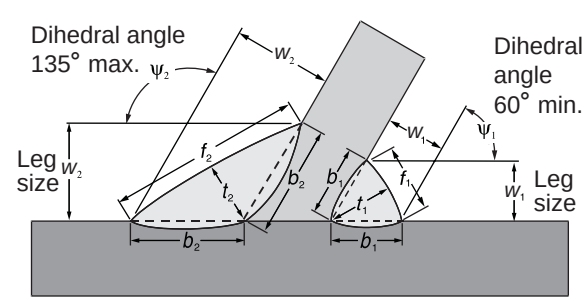

Fig. 3-20. Equal throat sizes ($t_1 = t_2$).

side, decreases in the dihedral angle will cause the weld to have incomplete fusion to the weld root. To account for this, the Z-loss factor is applied. The Z-loss is the amount of incomplete fusion that is expected in the roots of welds made into skewed T-joints with small dihedral angles. The Z-loss factor is a function of the welding process, position of welding, and the dihedral angle (AWS D1.1, Table 2.2). The available weld throat is reduced by the amount of the Z-loss. Therefore, to achieve the desired throat dimension, the Z-loss amount needs to be added to the weld dimension. Such losses must be considered as weld throat dimensions are determined.

Recommendations for how to handle all of these details is beyond the scope of this Guide, although the literature does address these subjects (Miller, 2002; Kloiber and Thornton, 2001; Lini, 2012).

3.12.4 Lap Joints

Longitudinal Fillet Welds

For end-loaded members where longitudinal fillet welds are used alone in lap joints, shear lag must be considered. AWS D1.1, clause 2.9.2, requires that the length of the longitudinal weld, l, be no less than the transverse spacing, w, between the two welds, as shown in Figure 3-21. The 2010 AISC *Specification* (AISC, 2010b) had similar requirements in Section J2.2b. In the 2016 AISC *Specification*, Table D3.1 provides an equation for determining the shear lag factor, U, for situations where l is less than w, as well as other relationships between l and w. For a given transverse spacing, w, longer fillet welds will result in a computed shear lag factor, U, that approaches 1.0.

Minimum Overlap Dimension

The minimum overlap dimension between lapped members should be no less than five times the thickness of the thinner member but not less than 1 in., according to AISC *Specification* Section J2.2b—see Figure 3-22. This ensures that there will not be unacceptable rotation in the connection when it is loaded.

Transverse Welds on One Edge Only

When a single transverse fillet weld is applied to a lap joint, tensile loading will cause local rotation of the joint, concentrating strains in the weld root, as shown in Figure 3-23.

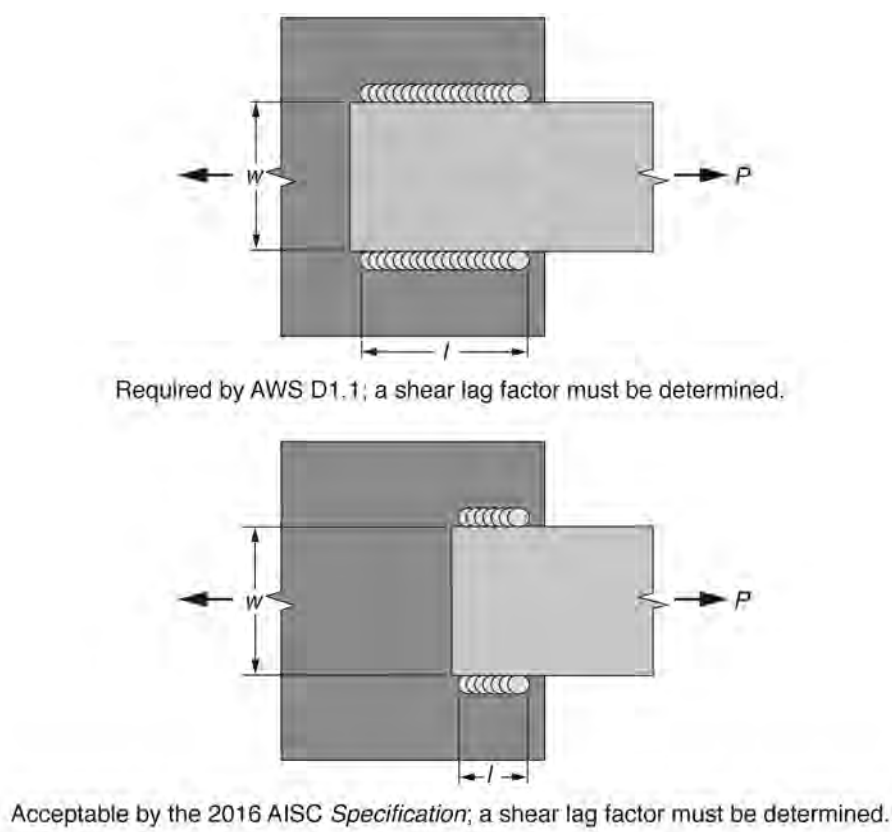

Fig. 3-21. Weld length versus transverse spacing.

To ensure that this does not occur, other welds that can be made from one side, like plug or slot welds, may be added. Alternatively, some type of mechanical support that prevents straining of the weld root may be utilized as discussed in AISC *Specification* Section J2.2b(f).

3.13 WELDING SYMBOLS

Welding symbols are used as a systematic means of communication conveying welding-related information in a graphical manner. Weld symbols are miniature, schematic representations of the types of welds or joint geometry to be made. In the structural steel industry, welding symbols are put onto various drawings to specify the details of producing a welded joint. Furthermore, welding symbols are routinely applied to the actual steel members so that shop and field welders know which joints are to receive the various weld types. Welding symbols are sometimes referred to as weld callouts.

AWS A2.4, *Standard Symbols for Welding, Brazing and Nondestructive Examination* (AWS, 2012d), defines practices for the use of such symbols. The AISC *Steel Construction Manual* (AISC, 2017), hereafter referred to as the AISC *Manual*, contains a summary of basic weld symbols; the prequalified groove weld details shown in the AISC *Manual* show the corresponding weld symbol for each example.

Welding symbols take on a format as shown in Figure 3-24. The symbol includes, at a minimum, a reference line and an arrow. Optionally, there may be a tail applied to the end of the reference line opposite the arrow end. The arrow points to the joint. The weld symbol designates the type of weld—fillet, groove, plug, etc.

Welding symbols are always read left to right. This is true for welding symbols with arrows that leave the left or right side of the reference line. A common error is to create a welding symbol with the assumption that the direction of reading is from the arrow to the tail, but symbols are always (properly) created to be read left to right, regardless of the arrow position.

Weld symbols shown above the reference line indicate that the weld is to be applied to the other side—that is, to the side opposite of the one to which the arrow points. Conversely, weld symbols below the reference line refer to the arrow side. The arrow may point up (as compared to the reference line) or down. Regardless of the direction in which the arrow points, the significance of arrow side and other side remains unchanged.

When groove welds are required, the contract drawings need only specify CJP or PJP, as applicable, in the tail of the welding symbol. This leaves the fabricator or erector with the option of selecting the type of groove weld (bevel, V, U or J), as well as the specific dimensions. These data are required to be included on shop drawings.

According to AWS D1.1, clause 2.3.5.3, a welding symbol without dimensions and without CJP in the tail "designates a weld that will develop full strength of the adjacent base metal in tension and in shear." This permits the connection detailer to select among CJP groove, PJP groove, fillet welds, or combinations of these welds to satisfy these requirements. When only CJP groove welds are acceptable, the designer should specify that condition in the welding symbol.

For PJP groove welds, contract document drawings need only specify the effective throat, E, that is required. Shop drawings must show the weld groove depth, S, that is required to achieve the E dimension, based upon the included angle, process and position of welding. With respect to PJP groove welds, perhaps the most common error is to omit the effective throat size from design drawings.

A commonly misused portion of a welding symbol is the weld-all-around symbol. The preferred alternative is to point to each joint that is to be welded, even if this approach is more time consuming. In many cases, the intent of the designer is not for a weld all around the member, despite what the symbol indicates. Consider, for example, a stiffener with corner clips, intended to be welded to a wide-flange beam with a pair of fillet welds to the web only. If the weld-all-around symbol is used and an arrow is directed toward the joint between the stiffener and the web, then two fillet

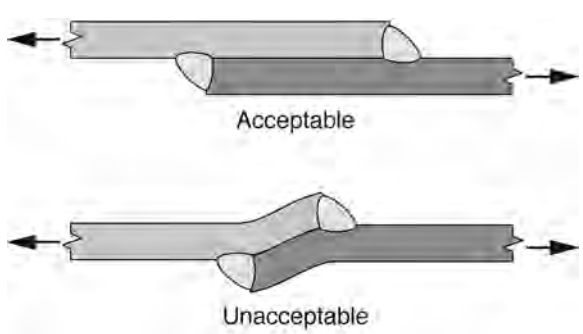

Fig. 3-22. Minimum overlap dimension for lap joints.

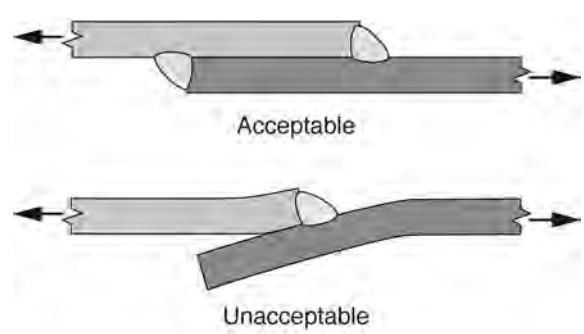

Fig. 3-23. One-sided fillet welds in lap joints.

welds of the stiffener to the web would be required, as was intended. Additionally, however, the edge of the stiffener at the clipped corner should also be welded, which was likely not expected. When arrows are used to point to the joint to be welded instead of using the weld-all-around symbol, such problems can be avoided.

Welding symbols can also be used to signify the type of nondestructive testing (NDT) that is to be performed.

Several common mistakes have already been mentioned. Other common errors typically involve the accidental substitution of a similar-looking symbol. Points of confusion include fillet welds versus bevel groove welds and plug or slot welds versus backing or spacers. Perhaps the most unfortunate situation occurs when extremely complicated welding symbols are used. Even when technically correct, they may lead to considerable confusion. In a complicated situation, a sketch of the weld detail can be added to the tail of the symbol or referenced in the same location, minimizing the potential for misunderstandings.

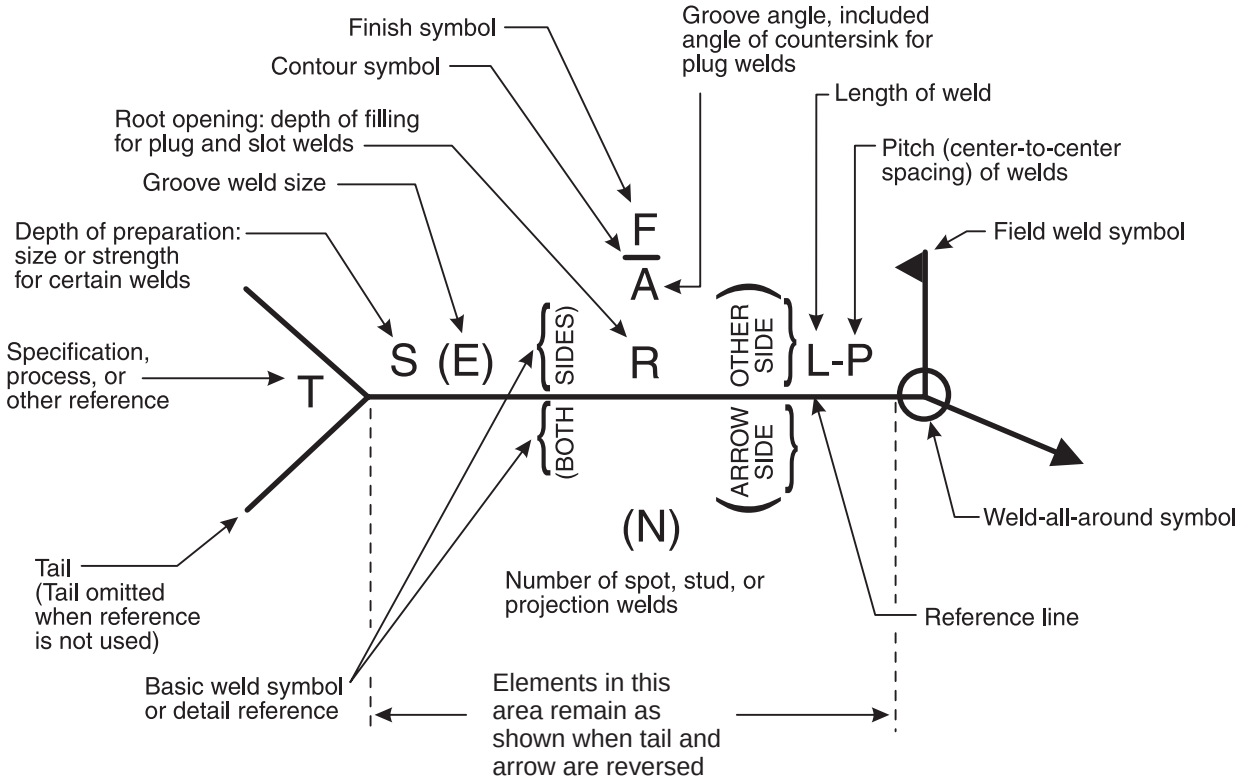

Fig. 3-24. Weld symbol.

AESS steel columns support the L-shaped building of Rutgers University's business school (photo courtesy of WSP).

Chapter 4
Details of Welded Connections

4.1 PRINCIPLES OF CONNECTION DESIGN

4.1.1 Introduction

What makes for a good welded connection? This section will attempt to answer that question by identifying a series of principles that should be considered when welded connections are designed. The principle is stated, explained and illustrated with examples of good and bad welded connections.

There is considerable art associated with structural steel design; connection design in particular. The term "principles" is used to identify the concepts as presented in this section; these are not codified rules, but general guidelines that are typically applicable. Details are identified as preferred and nonpreferred to illustrate these principles. However, even nonpreferred details may be acceptable in some situations such as in lightly loaded applications. In some situations, circumstances may force the use of a nonpreferred detail. In some cases, the AISC *Specification* provides design rules to allow for the successful usage of details identified as nonpreferred. Accordingly, the principles as outlined in this section should be taken as general guidelines, not as absolute statements of acceptability. Where specific joints should be prohibited, the AISC *Specification* and AWS D1.1 are generally specific in listing such prohibitions.

4.1.2 Fourteen Principles of Connection Design

Principle 1: A good welded connection is strong enough to transfer all the applied loads through the connection in an efficient manner.

If the connection is not strong enough, nothing else about the connection really matters; the weld (or welds) that join the various pieces of steel together must be of a size and made with a welding material that will have sufficient strength for the application. However, welds are not required to duplicate the strength of the attached members, but rather need only transfer the loads passed through the connection.

To properly size a weld, it is essential to know what loads are transferred through the connection. Two issues must be considered: the magnitude of the loads and which loads are transferred through the weld. For transverse splices, this is a relatively simple task. For longitudinal welds, the task is not so simple.

Consider the illustrations in Figure 4-1, a fabricated box made with four longitudinal welds. In Figure 4-1(a), the box assembly functions as a hanger and the tensile forces are uniformly distributed across the whole cross section. In Figure 4-1(b), the same assembly could be a short column and loaded in compression. These are examples of what AISC *Specification* Table J2.5 calls "tension or compression in parts joined parallel to a weld," which is followed

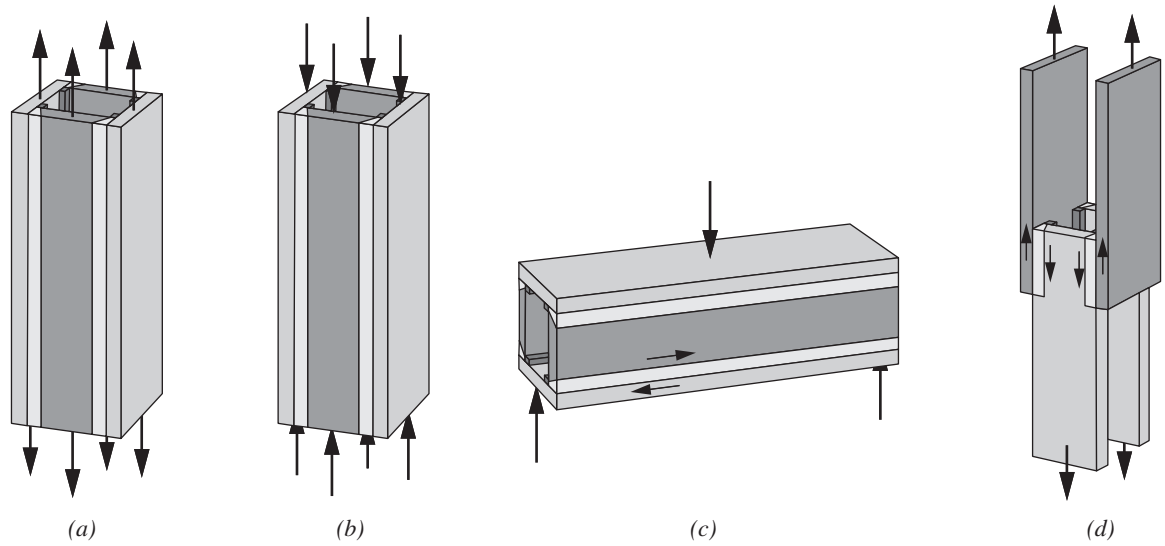

Fig. 4-1. Types of loads transferred through welded connections.

by the statement that such welds "need not be considered in design." AWS D1.1, Table 2.3, addresses the same situation in a slightly different manner by stating that this is "not a welded joint design consideration." In the situations illustrated in Figures 4-1(a) and 4-1(b), there is essentially no load transferred across the joint, and thus the weld need only hold the parts together. Shipping and handling loads will likely create the greatest stresses these welds will ever need to transfer.

In Figure 4-1(c), the same box assembly is now loaded as a beam and subjected to bending. The load transferred between the webs and the flanges is horizontal (or longitudinal) shear, and the loading of concern is shear on the effective area of the weld. The shear force transferred from web to flange is relatively small, and minimum-sized fillet welds, even intermittent fillet welds, are typically adequate to resist the transferred load.

The example shown in Figure 4-1(d) utilizes the same general box configuration in the center of the assembly. The full tensile loads are transferred from the upper plates, through the welds, and into the lower plates. In this case, the total load is transferred through the connection, and a more substantial weld is required than in the examples illustrated in Figures 4-1(a) through 1(c).

Principle 1 also calls for the welded connection to be efficient. Welds that are larger than necessary are not efficient. The inefficiency is not just a matter of increased cost; larger than necessary welds result in more shrinkage, which in turn leads to more distortion and higher residual stresses, along with increased cracking and tearing tendencies. Thus, the adage to "minimize the volume of weld metal in that joint" is more than a route toward economy, but rather an overall objective to be considered when designing and detailing welded connections. Chapter 17 of this Guide provides practical suggestions as to how weld metal volumes can be reduced.

Principle 2: A good welded connection has a clear and direct load path.

Stresses in the member must flow from one member, through the welds, and into the attached member. Welded connections should be designed and detailed to provide easy paths for the stresses to flow through the connection. Principle 2 has been summarized as follows: "Provide a path for the force to enter into the part (or section) that lies parallel to the force" (Blodgett, 1982).

This concept is sometimes also called load path, which can be applied on a global as well as a local basis. The load path is "…dependent on the stiffness of the elements in the structural system" (Drucker, 2014). In other words, the force goes to the stiff part. Or, conversely, the stress avoids the flexible parts. The mere presence of a piece of steel in the connection configuration does not mean that the loads will be automatically transferred through that component. Consideration of the stiffness of the elements is a key way to understand the behavior of the connection.

Consider the example shown in Figure 4-2. The vertical load is transferred to the lug, through the weld, through the flange and directly to the web. The weld is uniformly loaded and the load path is clear and direct. In contrast, consider the configuration shown in Figure 4-3. The load in the lug is transferred through the weld to the flange, but the flange is flexible. The load eventually flows to the web but the weld is no longer uniformly loaded along the length. A pair of stiffeners, as shown in Figure 4-4, corrects for this situation. Here, the load path is clear: from the lug, through the

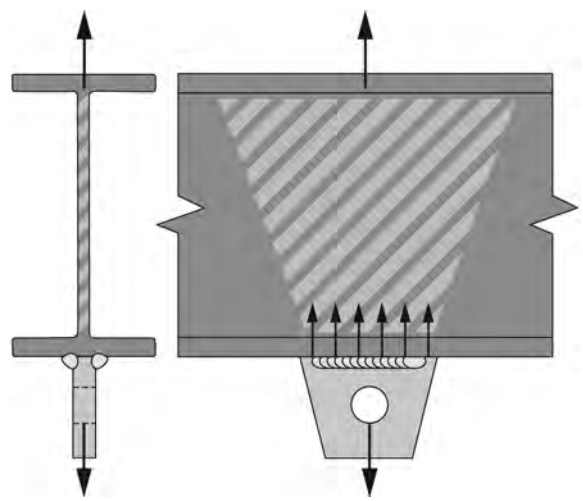

Fig. 4-2. Forces directly entering the member that lies parallel (preferred).

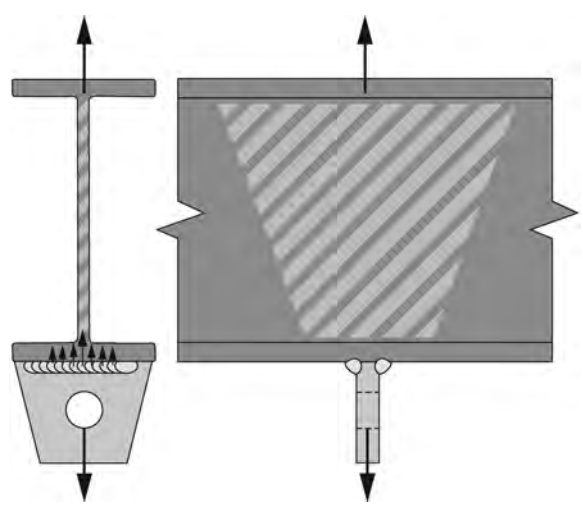

Fig. 4-3. Forces indirectly entering the member that lies parallel (nonpreferred).

weld, through the stiffened flange, into the stiffeners, and ultimately into the parallel member (i.e., the web).

The same principle applies to hollow structural sections (HSS), but the effect is nearly the opposite of the situations previously discussed where wide-flange shapes are used. In Figure 4-5, a lug is attached in the center of the width of an HSS. When the lug was added to a wide-flange shape in the location as shown in Figure 4-2, the configuration was ideal. However, with the HSS example, the load path is not direct. In the deformed configuration, as shown in Figure 4-6, strains at the weld toes and at the ends of the weld are apparent.

While rotating the lug 90° as shown in Figure 4-7 will likely reduce the amount of face deformation under a given load, there still exists unequal strains in the weld. The highest stresses are now at the ends of the weld, at the location of the HSS corner radius. The radius precludes a direct transfer of load from the lug to the sides of the HSS. The quality of weld starts and stops will be critical in this configuration as the ends of the welds will be highly strained, as shown in Figure 4-8.

Figures 4-9 and 4-10 provide alternatives that overcome the aforementioned problems and follow the principle of providing a path for the force to enter into the part or section that lies parallel. In Figure 4-9, the force in the transverse lug is passed into an internal diaphragm and then into the parallel side walls of the HSS. There are constructability

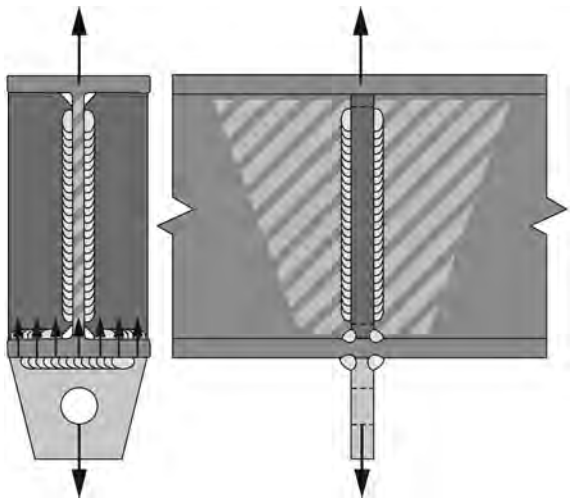

Fig. 4-4. Stiffeners provide a path for the force to enter into the parallel member (preferred).

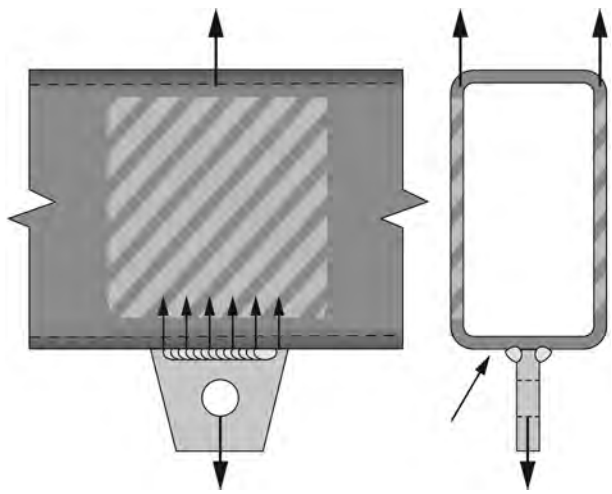

Fig. 4-5. Forces entering an HSS section, causing straining at the weld toe.

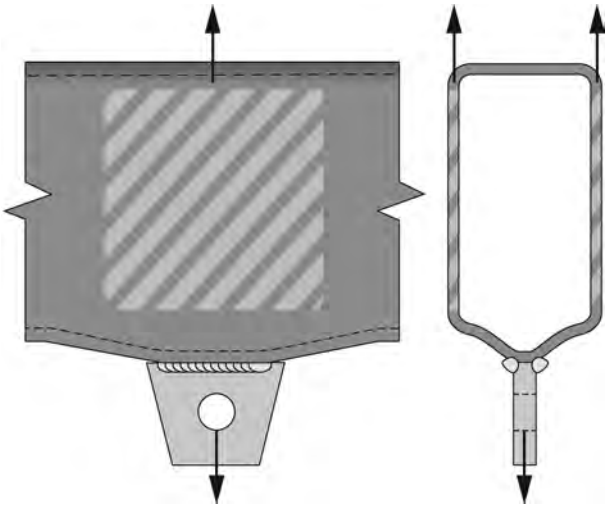

Fig. 4-6. Deformed HSS section.

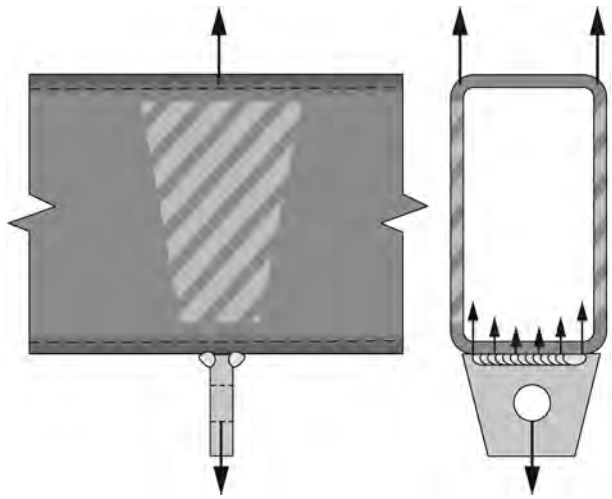

Fig. 4-7. Forces entering a HSS section, still not ideal.

challenges associated with this detail because there must be access into the HSS to permit insertion and welding of the diaphragm. The detail shown in Figure 4-10 overcomes the constructability problem by using a yoke-type bracket that wraps around the HSS; the welds transfer the force in the yoke directly to the parallel portions of the HSS.

AISC *Specification* Chapter K provides a variety of ways to deal with the aforementioned situations dealing with HSS. The use of these examples is to illustrate Principle 2, which encourages the use of a clear and direct load path.

Stresses do not always immediately transfer through welded connections. Consider the two lapped connections shown in Figure 4-11. In Figure 4-11(a), a lap joint with transverse fillet welds is shown where the stress flow is obvious and direct; the stress is transferred from the left plate, through the welds, and to the right plate. In this case, the fillet welds are uniformly loaded along their length. In Figure 4-11(b), the lap joint is joined with longitudinal welds where some of the stress must first pass from the center of the width of the plate on the left to the edge where the fillet is located. Once through the fillet and into the second plate, the stresses must once again be redistributed in a uniform way in the plate on the right. In the case of the longitudinal fillet welds, the loading along the length of the welds is no longer uniform. The stress flow is more complicated in the second example, and a longer weld can be used to minimize

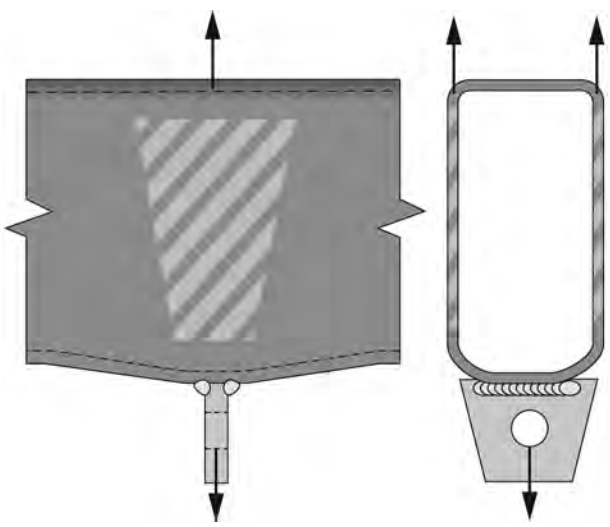

Fig. 4-8. Deformed HSS section.

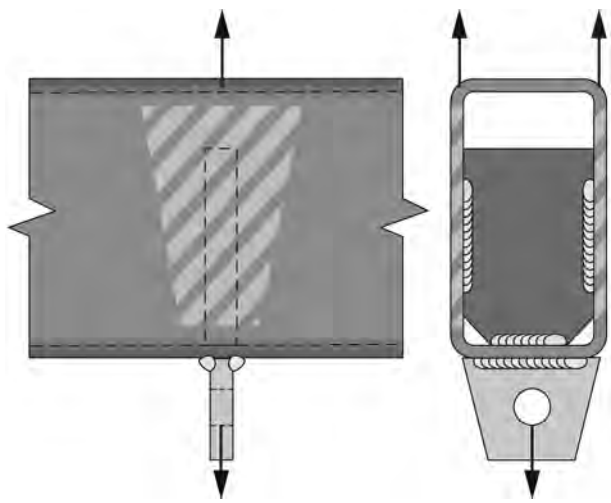

Fig. 4-9. Internal diaphragm transfers forces into the parallel member.

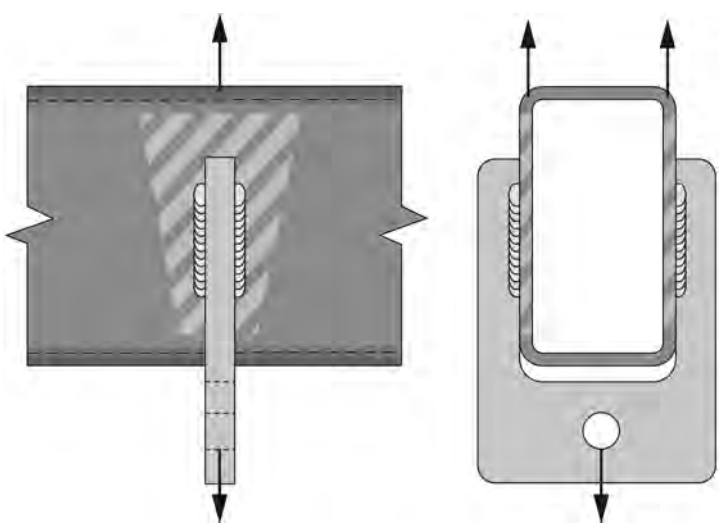

Fig. 4-10. External yoke transfers forces into the parallel member.

the effects of the uneven loading on the longitudinal weld. Ideally, a sufficient length of weld is specified to account for this. Alternately, the stresses in the member and through the connection can be reduced. The topic of shear lag is discussed in Section 4.3.5 of this Guide.

Principle 3: A good welded connection places welds in regions of low stress.

When possible and practical, welds should be placed in regions of low stress. When this is done, welds are less critical. Further, this often leads to economy because the welds are typically smaller in size.

There are many applications of this principle; two will be cited. In Figure 4-12(a), the large loads associated with the thicker horizontal plate must be transferred through the relatively large fillet welds; the vertical loads are transferred through the plate. In Figure 4-12(b), the reconfiguration of the joint allows for smaller welds because the large horizontal loads are transferred through the plate and the smaller vertical loads can be passed through the smaller fillet welds.

For cyclically loaded structures, welds at the ends of coverplates constitute a low stress range detail (Category E or E′) as shown in Figure 4-13(a). Extending the coverplate into a lower stress range region as shown in Figure 4-13(b) may permit the use of the Category E or E′ detail.

Principle 4: A good welded connection does not introduce stress raisers.

Certain welds and weld details may introduce stress raisers into the connection. Any planar discontinuity has the potential of acting as a stress raiser, such as a crack in the welded connection, an incomplete fusion plane, or an unfused interface between steel backing and the surrounding steel. These planar discontinuities are most significant when oriented perpendicular to a tensile stress. The potential influence of a stress raiser on the behavior of a connection is complex and involves factors such as the magnitude of stress, the type of stress (static versus cyclic), and others. The overall principle of connection design remains the same—a good welded connection does not introduce stress raisers.

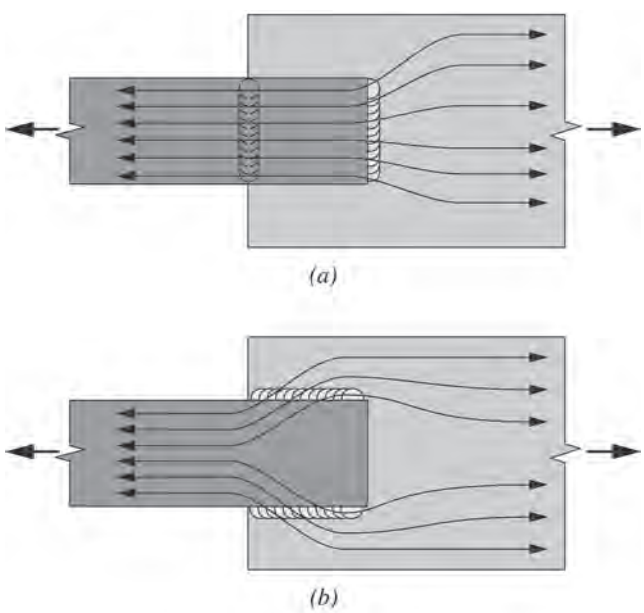

Fig. 4-11. Transfer of forces through a lap joint, with transverse welds and longitudinal welds.

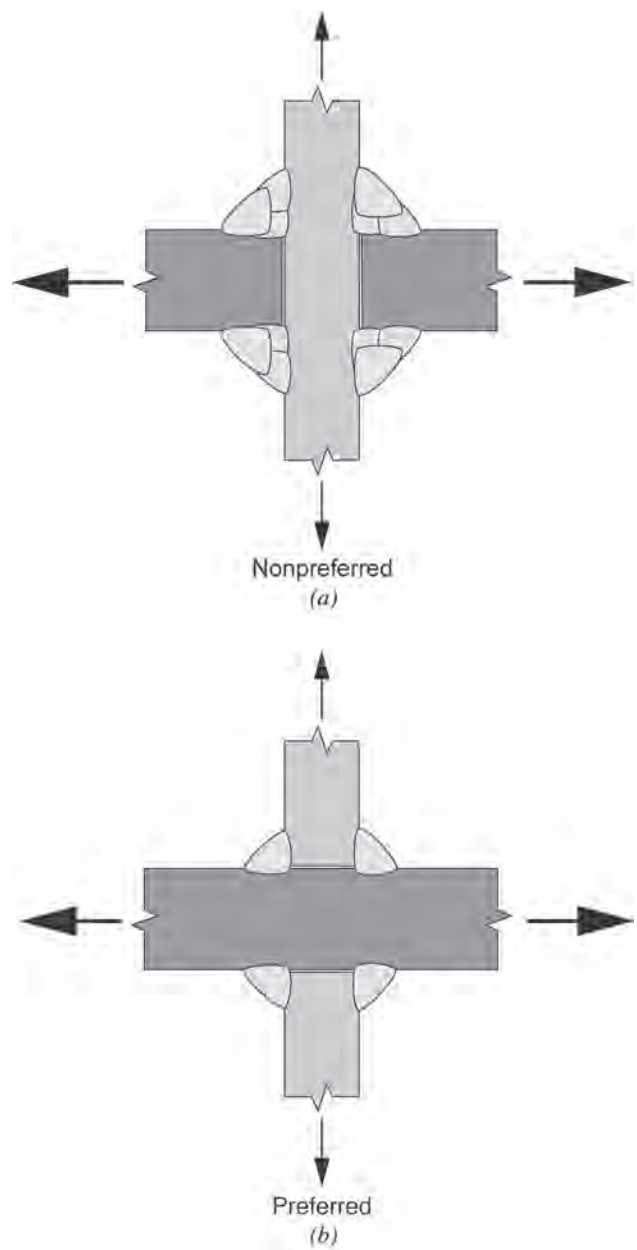

Fig. 4-12. Cruciform joint options.

Consider the PJP groove welds shown in Figure 4-14. Figure 4-14(a) shows a single-sided weld where even a good quality weld with complete fusion to the root will contain a stress concentration. The applied tensile loads will create localized bending stresses that are concentrated about the root. Figure 4-14(b) shows a double-sided PJP configuration. The bending stresses about the root are eliminated, and even though a stress raiser still exists in the root, the condition is acceptable for statically loaded applications where sufficient weld throat exists and may be acceptable for some cyclically loaded applications as well.

Left-in-place steel backing may introduce stress raisers. Consider the CJP groove welds shown in Figure 4-15. In Figure 4-15(a), the groove weld with steel backing in a butt joint is shown loaded in tension. There is a naturally occurring lack-of-fusion plane between the back side of the steel and the top surface of the steel backing, but this interface does not create a stress raiser because it is parallel to the direction of applied stress. However, in Figure 4-15(b), the same weld is shown in a T-joint where the one interface is essentially perpendicular to the stress field, creating a stress raiser.

Discontinuous steel backing can introduce problematic stress raisers, as shown in Figure 4-16. The continuous

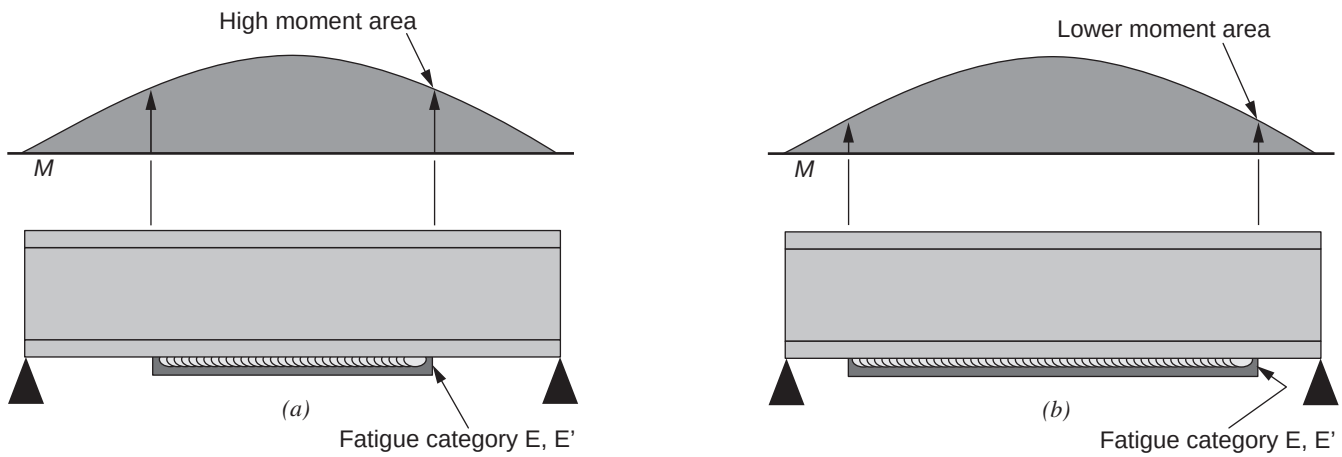

Fig. 4-13. Cover plate length and stress range at termination.

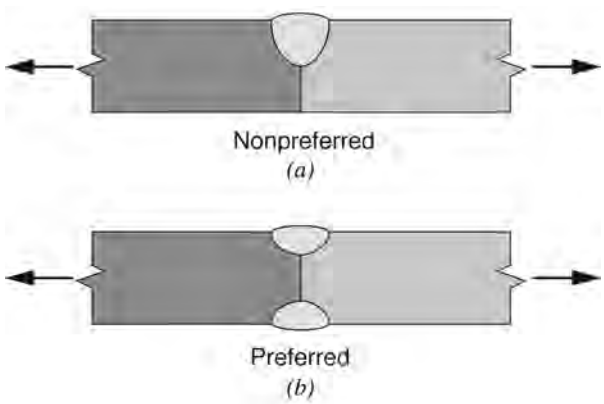

Fig. 4-14. Eliminate bending about the root by using a double-sided PJP.

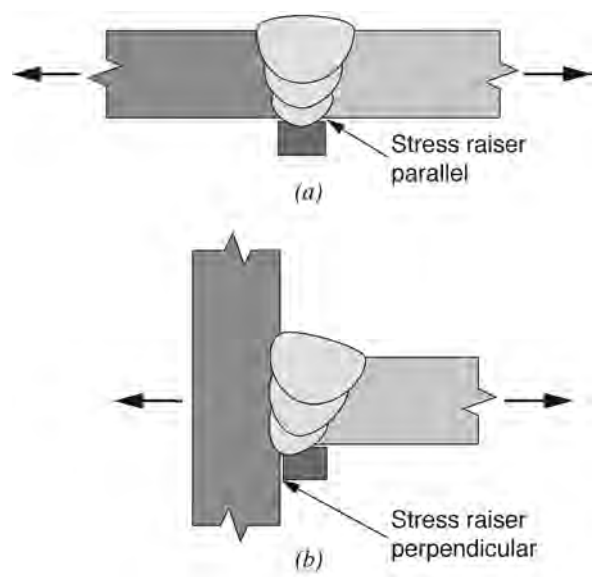

Fig. 4-15. Parallel versus perpendicular stress raiser due to left-in-place backing.

backing shown in Figure 4-16(a) is the desirable condition. In Figure 4-16(b), segments of backing have been placed under the weld joint, butted together but not welded to each other. When the groove weld is made with fusion into the backing, the backing becomes part of the weldment. The unfused interface between the segments of backing creates a planar discontinuity. If the box is loaded in bending, tensile stresses at the interface will be locally amplified. To mitigate this problem, the segments of backing can be joined together with CJP welds before being applied to the joint, eliminating the stress raiser.

Some interruptions in backing are acceptable. Consider the HSS splice shown in Figure 4-17. Two C-shaped segments of steel have been used to create backing for the box HSS. While there are two planar discontinuities created between the segments of backing, tensile loading on the tube would result in a stress that is parallel to the planar discontinues; when parallel to the stress field, harmful stress raisers are not created.

Principle 5: A good welded connection is not constrained.

When joints are welded, the hot, expanded weld metal and any hot base metal surrounding the weld attempt to shrink as this region cools. For thin and flexible assemblies, this shrinkage will result in distortion. For assemblies with normal constraint, the surrounding cooler and unexpanded base metal resists the shrinkage stresses imposed by the weld, causing the weld metal to yield. This yielding continues until the shrinkage stresses imposed by weld are fully resisted by the surrounding base metal. This equilibrium condition is achieved when the residual stresses in the weld are at essentially the same level as the resisting stresses in the base metal.

For highly constrained or highly restrained connections, the residual stresses can exceed the uniaxial yield strength

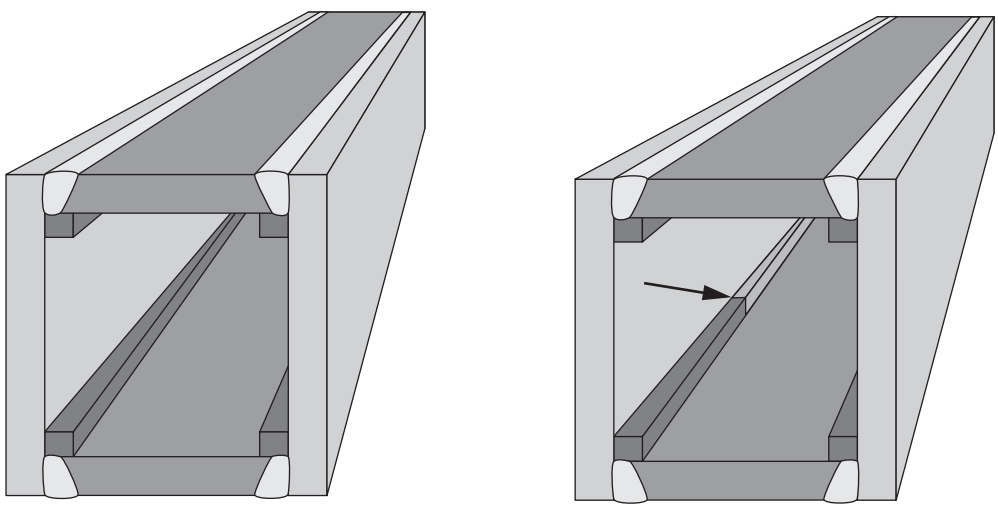

Continuous backing
(a)

Discontinuous backing
(b)

Fig. 4-16. Discontinuous steel backing (loading perpendicular to the stress raiser).

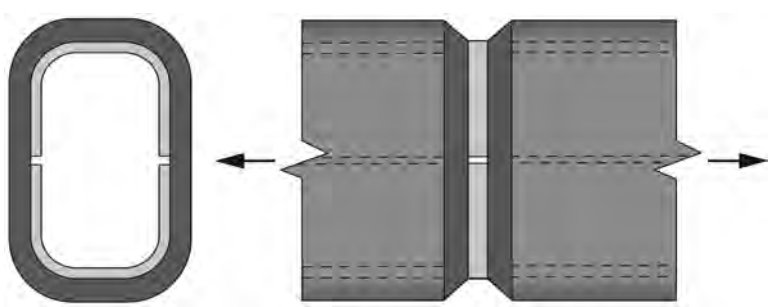

Fig. 4-17. Discontinuous steel backing ring (loading parallel to the stress raiser).

of the steel. Under severe restraint, normally ductile weld metal or base metal may crack instead of yielding. A good welded connection is therefore not constrained. Constraint is difficult to define and generally involves steel over 2 in. (50 mm) thick that intersect from all three orthogonal directions. The subject of welding on highly restrained members is discussed in Section 14.5 of this Guide.

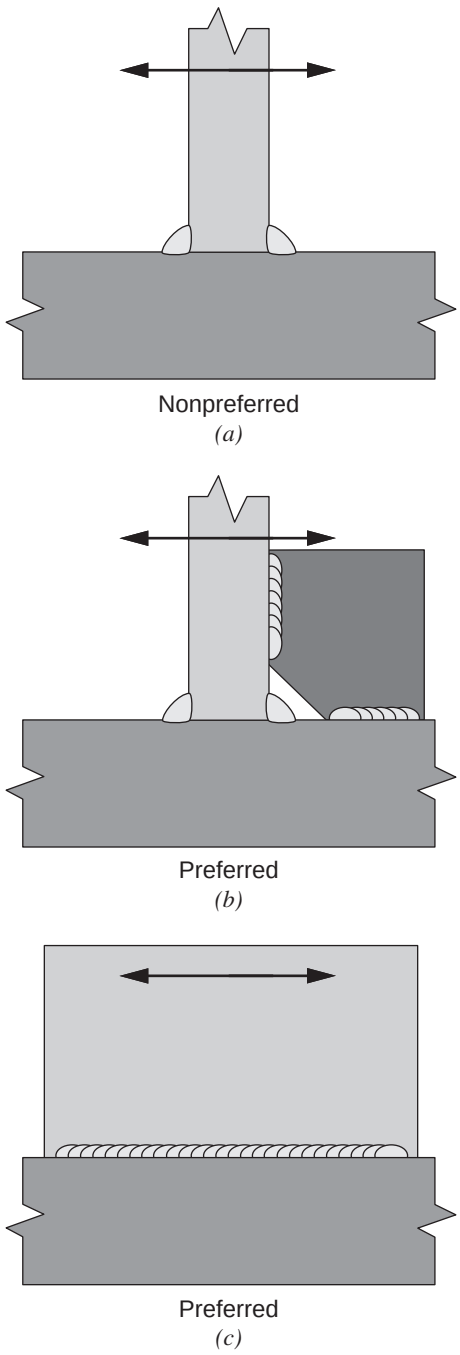

Fig. 4-18. Details to avoid bending about the root of the weld.

Principle 6: A good welded connection does not subject the weld to bending.

Principle 6 discourages loading that would bend the weld about its longitudinal axis, as shown in Figure 4-18(a). Such loading concentrates strains at weld toes and roots. Stiffeners can be applied to resist this bending as shown in Figure 4-18(b); in some cases, the orientation of the member can be changed so the weld is loaded in shear as illustrated in Figure 4-18(c).

Principle 7: A good welded connection protects the toes and roots of the welds.

Weld toes and roots can create stress concentrations, and a good welded connection protects these vulnerable regions. The root of a single-sided fillet weld is left unprotected when loaded in tension, as shown in Figure 4-19(a). The double-sided fillet welds shown in Figure 4-19(b) provide adequate protection of the root for statically loaded applications.

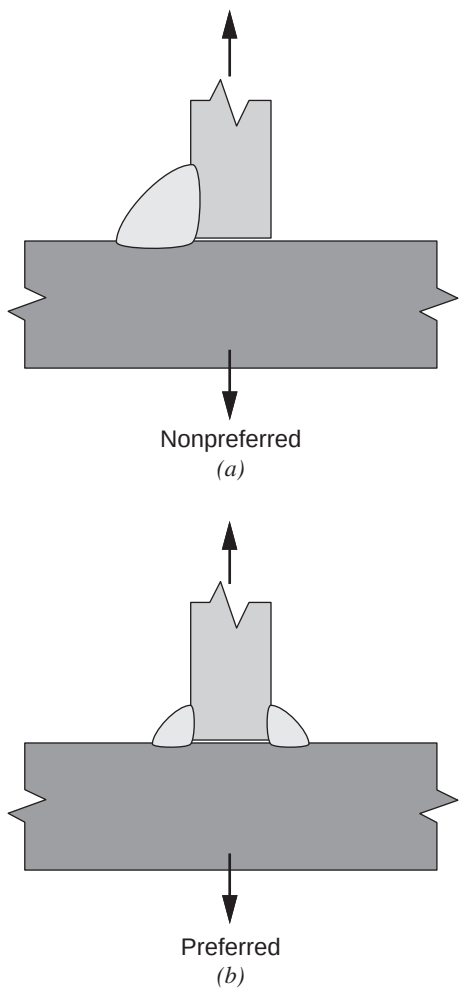

Fig. 4-19. Details to avoid rotation about the root of the weld.

CJP groove welds can have root issues, as shown in Figure 4-20. The single-sided CJP in the T-joint in Figure 4-20(a) has a stress concentration in the root caused by the left-in-place steel backing. The double-sided CJP in Figure 4-20(b) has a planar stress concentration in the root due to improper backgouging before the second side is welded. In Figure 4-20(c), incomplete fusion in the root has created a stress concentration in the root. In Figure 4-20(a), there is no quality problem; the stress concentration is inherent to the connection detail. In the last two examples, weld quality is responsible for the stress concentration.

In addition to the stress concentration created by weld roots, weld toes can similarly create stress raisers, albeit typically less severe than root problems. In fatigue sensitive applications, removal of the reinforcement on transverse CJP groove welds improves the fatigue resistance from Category C to Category B (see Chapter 12 of this Guide); this improvement is achieved because the weld toes are eliminated when the reinforcement is removed. It is at the toe of transverse fillet welds at the ends of coverplates that fatigue cracks will initiate. Also, various weld discontinuities such as undercut, overlap and underbead cracking are concentrated at the weld toes.

For these reasons, it is wise to watch your toes and remember your roots. Welded connection details should be examined to make certain that neither the toes nor the roots will be problematic. Principle 7 is related to Principle 4, and it is important to remember that stress raisers are only important when there is a perpendicular force (or component of force) to the geometric feature. The roots and toes of longitudinal fillet welds on plate girders subject to bending loads do not have stresses that are concentrated at these geometric discontinuities.

Principle 8: A good welded connection has a clearly defined throat.

In general terms, the strength of a weld depends on the effective area of the weld, multiplied by a factor that addresses the strength of the deposited weld. For welds other than plug and slot welds, the effective area is dependent on the weld throat dimension multiplied by the weld length. The weld throat is a small dimension as compared to the weld length, and small changes to the throat dimension will have a large effect on the available strength of the weld. A good welded connection has a clearly defined throat.

Two examples of welds with poorly defined throats will be used to illustrate this concept; one involving CJP groove welds and the other involving fillet welds. In Figure 4-21, three butt joints are shown. The intent is for the weld throat to be equivalent to the thickness of the material joined, consistent with the definition of a CJP groove weld. In Figure 4-21(a) and 4-21(b), correct CJP groove welds are illustrated. Notice that both of these welds utilize AWS D1.1 prequalified groove weld details. In Figure 4-21(c), a nonprequalified joint detail has been used, a square edge groove weld. The actual weld throat will be dependent on the level of penetration achieved during production welding. In other words, the throat is uncertain.

The second example involves fillet welds in a T-joint as shown in Figure 4-22. Drawings of such a joint will routinely show the two parts of the T-joint in perfect alignment—perfectly perpendicular and with no gap between the members. Production realities dictate that there will be variations from perfection, and gaps between the members are one such reality. When tightly fit, the weld throat is as shown in Figure 4-22(a). Next, consider the throat of an identically sized fillet weld in a joint with an excessive root opening as shown in Figure 4-22(b). The actual throat has been significantly diminished from what would reasonably be expected for a weld of that physical size. The issues of fit-up tolerances, as well as requirements to compensate for such variations, are addressed in AWS D1.1.

Principle 8 encourages the connection designer to consider factors that might result in welds with throat dimensions that differ significantly from expectations. In the case of the groove weld example, the use of prequalified groove weld details will overcome that problem. Alternately, for details that rely on penetration to obtain the required strength, WPS qualification coupled with control of production welding

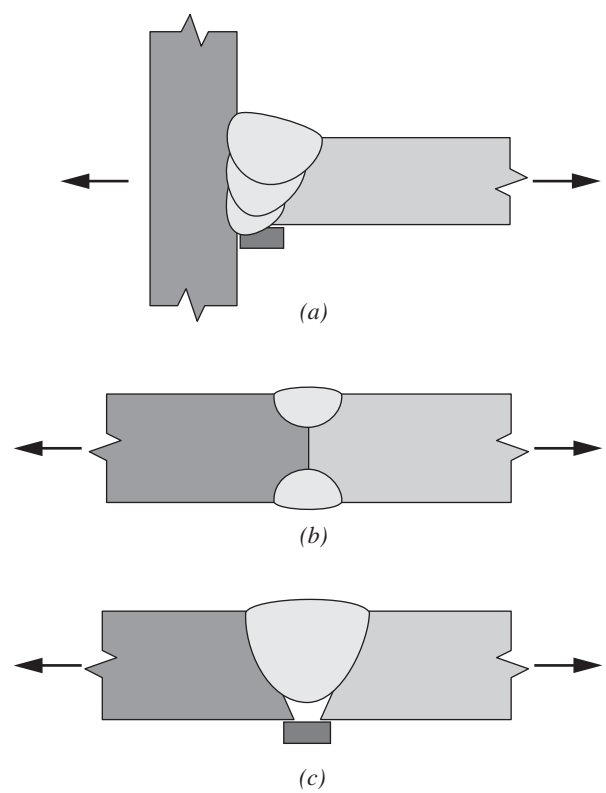

Fig. 4-20. Stress concentrators in CJP groove welds.

variables will mitigate this potential. Postweld NDT can provide additional assurance that the required weld throat has been achieved. For the fillet weld example, compliance with AWS D1.1 fit-up tolerances is important. Verification of prewelding fit-up dimensions can allow for compensation for larger root openings and corresponding adjustment of fillet weld leg sizes.

The two examples are illustrative, not exhaustive, but represent situations where Principle 8 should be applied. Evaluating what may result from a less-than-expected weld throat dimension will allow proactive efforts to ensure welds with appropriate throat dimensions can be achieved.

Principle 9: A good welded connection recognizes material properties.

A good welded connection considers variations in the mechanical, physical and chemical properties of the steel, particularly when welds will be located on and around the material with local variations. Examples of such material variations are discussed in Section 5.2 of this Guide. Detailing to avoid lamellar tearing, discussed extensively in Section 4.4 of this Guide, is one application of Principle 9. Avoiding the placement of welds in the *k*-area is another example (see Sections 5.2 and 5.4 of this Guide). The principles for successful welding of heavy rolled sections have been established to deal with the more distinct heterogeneity of these shapes (see Section 14.4); each of these examples serves as illustration of how Principle 9 should be applied.

Principle 10: A good welded connection is easy and economical to fabricate and erect.

A good welded connection considers both the ease of construction and economics. Ideas to reduce the cost of welded connections are addressed in Chapter 17 of this Guide. In general, connections that minimize the amount of weld metal needed will be lower cost. Easy-to-construct connections are typically the least expensive and generally lead to improved quality. Details that permit flat and horizontal welding encourage quality and economy. While out-of-position welds may be made in a quality way with proper procedures and skilled welders, the cost for such welds is inevitably higher than in-position welds.

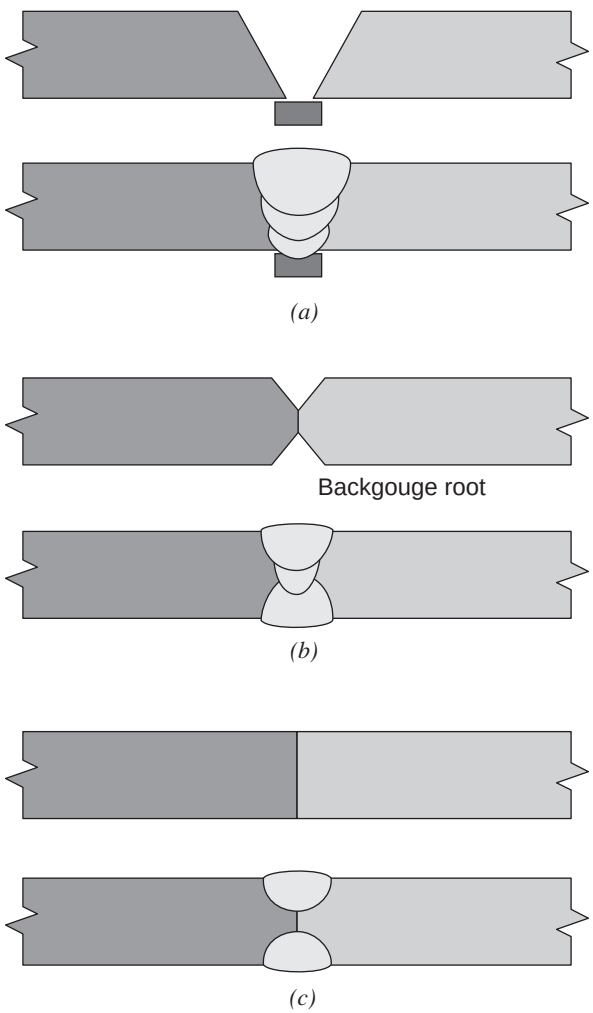

Fig. 4-21. Acceptable (a) and (b), and unacceptable (c) weld sizes in butt joints.

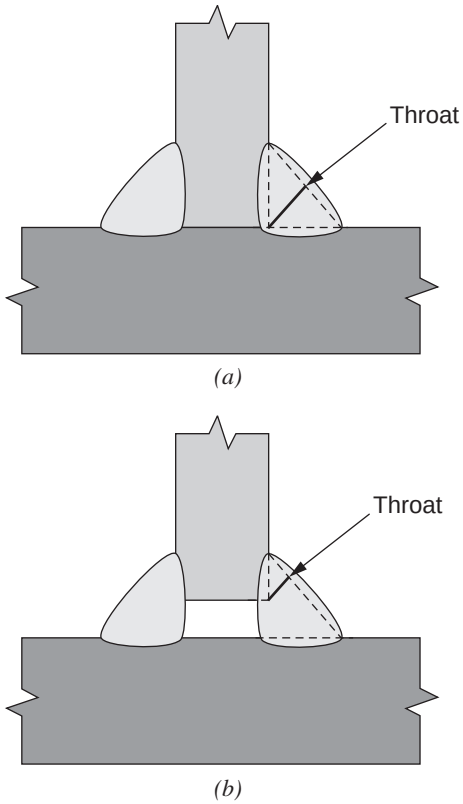

Fig. 4-22. Acceptable (a) and unacceptable (b) weld sizes in T-joints.

Principle 11: A good welded connection is easily inspected.

The issue of inspection should be considered when welded details are specified. Inspection includes both visual inspection as well as nondestructive testing. On complex assemblies, subsequent welding operations may preclude inspection of previously deposited welds. For such assemblies, hold points may need to be established. Left-in-place steel backing can complicate the interpretation of NDT results. A good welded connection is one in which inspection is considered when details are finalized.

Principle 12: A good welded connection recognizes commercial realities.

The concept of commercial realities is vastly broad, but three general categories should be considered: (1) mill tolerances on the basic material used for construction, (2) shop fabrication practices, and (3) field erection practices. Commercial practices change constantly. Advances in the capabilities of fabrication shops make it possible to fabricate structural components that would have been impossible only a few years ago.

A good welded connection recognizes that commercial materials will be subject to geometric variations. Acceptable variations may have a significant effect on the details of the welded connections that join the various members. Figures 4-23(a) and 4-23(b) show flange tilt that is allowable per ASTM A6 (ASTM, 2016). If two rolled sections are joined together, each with the maximum flange tilt but in the opposite direction where the allowable tolerances work against each other, then the variation shown in Figure 4-23(c) will result. This is an extreme condition, of course, but these variations will directly translate into variability in the as-fit dimension of the weld joint.

Other examples include the allowable variation in the corner radius dimension for cold formed HSS, and the permitted variation in round tubing diameters (see Section 3.4.5 of this Guide). Allowable mill and fabrication tolerances often accumulate and become evident in the pre-weld joint geometry. Such variations should be anticipated when connections are designed and detailed.

AWS D1.1 defines allowable tolerances that allow for some variation from ideal conditions, accounting for normal variations in fabrication as well as distortion (see Chapter 7 of this Guide).

In some cases, all of the allowable tolerances accumulate in the welded connection. Such variation should be anticipated when connections are designed and detailed.

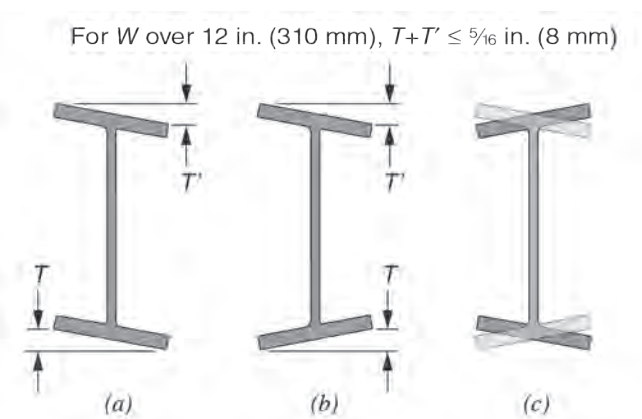

Fig. 4-23. Acceptable flange tilt tolerances.

Principle 13: A good welded connection is aesthetically pleasing.

Aesthetics are not important for connections that will be fireproofed and buried behind wall board. However, architectural exposed structural steel (AESS) is becoming an increasingly important aspect of steel construction (see Section 14.7 of this Guide). There is certainly room for many opinions as to what constitutes an aesthetically pleasing connection, but one philosophy is that connections should appear nonexistent; in this respect, welded connections excel. HSS members, popular for AESS applications, can be joined to each other without intermediate connection materials, such as flanges or gusset plates. Splices of rolled shapes can be made without the need for lapped plates and bolts that interrupt the overall flow of the structural elements.

Principle 14: A good welded connection can be made safely.

Certain details may require welding under conditions that are less than optimal for the welder. For example, box sections with double-sided groove welds necessitate that some of the work be performed inside the box. This may create egress and ventilation problems so that a single-sided groove weld may be a preferred option. While high levels of preheat may be necessary when certain steels are to be welded, the effect of the heat on the welder who may have to work in close proximity to the preheated steel should be considered. Safety should always be considered when welds are designed and detailed.

4.2 WELDED CONNECTION DETAILS

4.2.1 Weld Tabs

A weld tab is "additional material extending beyond either end of the joint on which the weld is initiated or terminated" (AWS, 2010d). If the weld is started on the tab, it is called a starting weld tab; if a weld is terminated on the tab, it is called a runoff weld tab as shown in Figure 4-24. These devices are routinely called runoff tabs, regardless of whether they are used for starting or terminating the weld. Weld tabs are most often associated with larger CJP groove welds although they can be used with fillet welds and PJP groove welds that continue to an edge.

Weld tabs help to ensure that welds are started and terminated in a sound manner. They should be aligned in a way that will provide for an extension of the joint preparation—that is, a continuation of the basic joint geometry. The use of plates that are perpendicular to the axis of the weld, commonly known as end dams, do not constitute weld tabs and should not be used at the end of a weld joint, as shown in Figure 4-25.

AWS D1.1, clause 5.30.1, does not state when and where weld tabs are required but requires that welds be terminated in a sound manner. Furthermore, a minimum length for weld tabs is not prescribed. The common rule of thumb is that weld tabs should be at least as long as the thickness (throat) of the groove weld, but this is neither required nor practical in some situations. It is advisable that backing (when used) also extend beyond the width of the joint by at least the length of the weld throat.

Acceptable steels for weld tabs are defined in AWS D1.1, clause 5.2.2. A variety of unacceptable materials have been inappropriately used over the years, including the twist-off ends of bolts, washers, electrode stubs, and air-arc gouging rod stubs; only code-listed materials should be used.

For statically loaded structures, AWS D1.1, clause 5.30.2, states that weld tabs are typically left in place, while for cyclically loaded structures, AWS D1.1, clause 5.30.3, requires that they be removed. According to the AISC *Code* Section 10.4.1(e) (AISC, 2016a), weld tabs are typically removed for AESS projects. In structures designed to resist seismic loads, AISC *Seismic Provisions* Section D2 (AISC, 2016c) and AISC *Prequalified Connections* (AISC, 2016b) define where weld tabs are required to be removed.

Weld tabs are not the same as weld backing (see Section 4.2.3 of this Guide), and any requirement that necessitates weld tab removal does not automatically mean that backing is also required to be removed. There are situations where weld tab removal may be appropriate, but weld backing removal can be problematic; the two removal situations should be addressed independently.

For cyclically loaded applications, AISC *Specification* Appendix 3, Section 3.5, mandates the use of weld tabs, and when welding is complete, they must be removed (AISC, 2016d). For seismic applications, AWS D1.8, clause 6.16.1 (AWS, 2016), requires the use of weld tabs and prescribes a minimum tab length of a minimum of 1 in. (25 mm), or the thickness of the part, whichever is greater, and tabs need not exceed 2 in. (50 mm). AWS D1.8 also prescribes tab attachment rules and criteria for tab removal when required.

4.2.2 Weld Access Holes

Weld access holes are openings that permit access for welding, backgouging, or for insertion of backing. A common example is found in the cuts provided in the web of a beam that is joined to a column; the top access hole permits

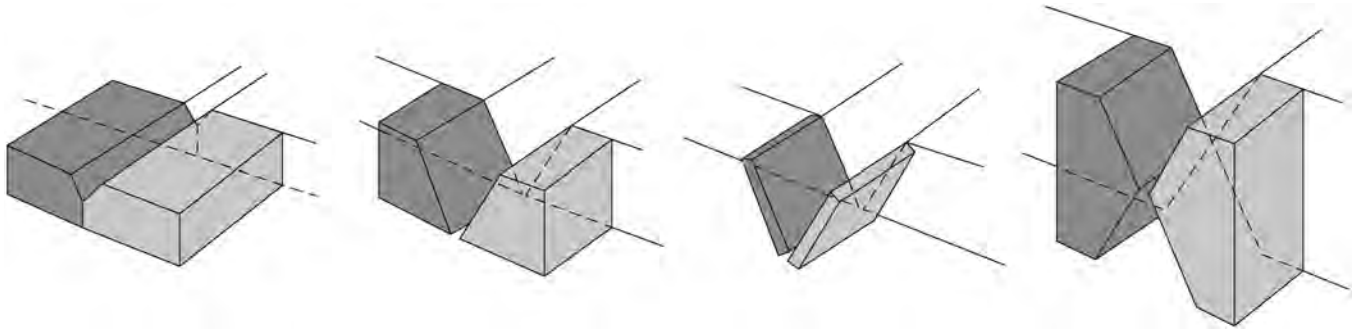

Fig. 4-24. Examples of weld tabs.

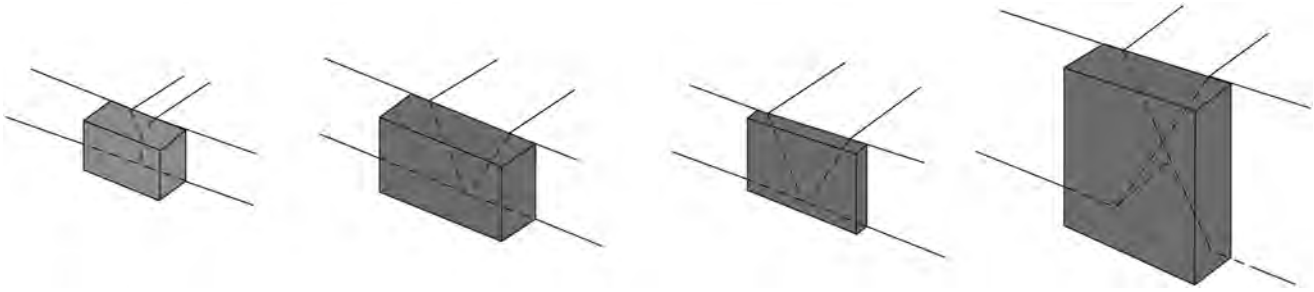

Fig. 4-25. Examples of unacceptable end dams.

backing to be inserted, and the bottom access hole permits the groove weld to be made, as shown in Figure 4-26. Additionally, in some connection details, weld tabs may need to be installed in such openings. Weld access holes are known by various slang terms, including rat holes and apple holes.

Weld access holes must be large enough to permit the welder to insert the welding electrode or welding gun into position, to see the weld pool while welding, and to permit the weld to be cleaned and visually inspected between weld passes.

In addition to the practical function of providing access to the weld joint being made, weld access holes also limit the interaction of the various residual stress fields. Consider a beam splice wherein no weld access hole has been provided, as illustrated in Figure 4-27. Furthermore, for this example, assume the vertical web weld is tied into the flange-to-flange weld. Completely aside from the problem that the flange welds cannot be made under the web, notice that the longitudinal and transverse shrinkage of these two welds will cause triaxial residual tensile stresses that all meet at a point. Triaxial stresses reduce the local shear stresses and limit the local ductility (Blodgett, 1995).

When a weld access hole is provided, the stresses caused by the longitudinal and transverse shrinkage of the vertical weld are physically precluded from interacting with those of the flange weld because there is no material at this juncture through which to transfer stress. Triaxial stresses are reduced, ductility is increased, and cracking tendencies are reduced. To limit the interaction of the multi-directional residual stresses, the weld access hole size may need to be considerably larger than would be required if the only issue was access for welding; see AISC *Specification* Section J1.6.

Weld access holes must be made properly, with the proper size (height and width) and with smooth surfaces that are free of notches and gouges. AWS D1.1 and the AISC *Specification* define the required geometry for weld access holes. Additional quality provisions apply for weld access holes in heavy sections, whether consisting of rolled shapes or built-up members.

Weld access holes are prepared by thermal cutting or by drilling and thermal cutting. Surface roughness criteria apply to the thermally cut edges. Grinding of weld access holes is not normally required when thermally cut surfaces meet acceptance criteria. Exceptions to this pattern include weld access holes made in heavy rolled sections, or built-up members that consist of plates over 2 in. (50 mm) thick, and for certain prequalified seismic connections. In these situations, AISC *Specification* Section M2.2 requires grinding of the thermally cut surface to bright metal. Also see Section 13.7.2 of this Guide.

For cyclically loaded members, AWS D1.1, clause 5.14.8.2, prohibits freehand thermal cutting unless approved by the engineer. While not limited to the cutting of weld access holes, the clause covers such applications. A straight edge or template against which a torch can be guided is no longer freehand and thus is permitted. Automatic cutting systems are acceptable as well.

For seismic applications, the shape and configuration of weld access holes affect the performance of some moment connections (see Chapter 11 of this Guide). The weld access hole region is a critical location in seismically loaded moment connections; when detailing and making weld access holes, the objective is to minimize stress concentrations at the curved back of the hole where the beam web intersects the beam flange. In the case of some of the prequalified end-plate moment connections, no weld access hole is permitted because better performance is achieved in these connections without access holes. For the welded unreinforced flange,

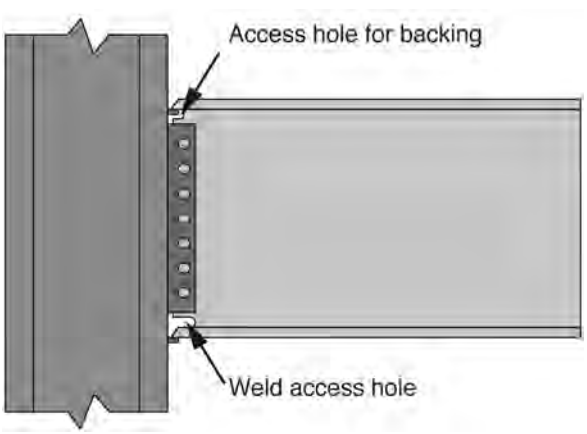

Fig. 4-26. Examples of weld access holes.

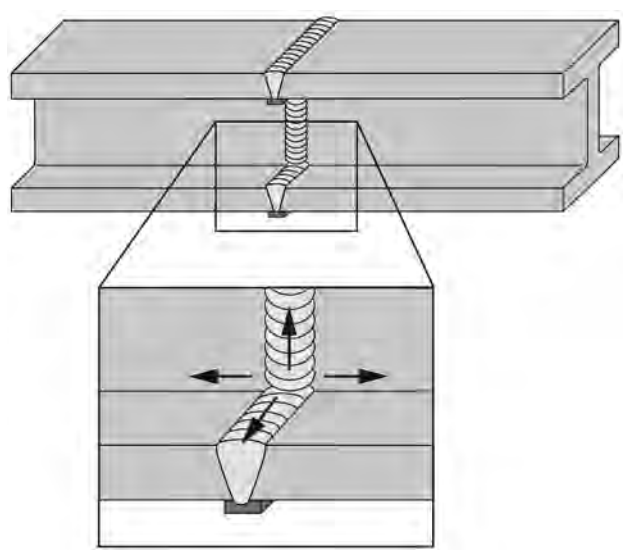

Fig. 4-27. Beam splice without access holes.

welded web (WUF-W) moment connection, a special weld access hole geometry is required; this geometry is specified in AWS D1.8.

4.2.3 Weld Backing

Backing is defined as "a material or device placed against the back side of the joint adjacent to the joint root…to support and shield molten weld metal. The material may be partially fused or remain unfused during welding and may be either metal or nonmetal" (AWS, 2010d). Examples of backing are shown in Figure 4-28. Backing is typically associated with CJP groove welds made from one side. Although typically made of steel for steel projects, backing may be made of other materials like copper or ceramic. Backing is considered fusible or nonfusible, depending on whether or not the weld is intended to bond to the backing.

While the proper terminology according to AWS A3.0 (AWS, 2010d) is simply backing, a whole range of colloquial terms are used, including weld backing, backing bars, backing strips, backup bars or sometimes simply BU (for backup). The subject of backing was generally introduced and the term was defined in Section 3.3.1 of this Guide. In this section, details are described for three forms of backing—steel, ceramic and copper.

Steel Backing

All prequalified, singled-sided CJP groove welds utilize steel backing, except for a limited application where non-steel backing may be used (which will be discussed) and for tubular construction where there are specialized one-sided CJP groove welds that can be made without steel backing. Otherwise, prequalified, single-sided CJP groove welds utilize steel backing.

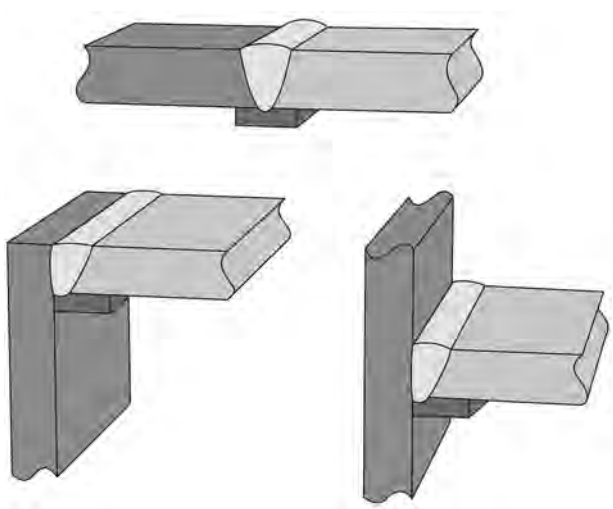

Fig. 4-28. Examples of weld backing.

Steel backing is fusible backing, and it is intended that the weld will fuse with the backing material and become part of the welded connection. While backing might be casually viewed as simply part of the contractor's means and methods, it is important to consider the potential influence of the backing on the performance of the connection. Left-in-place steel backing may in some cases, but not in all, introduce unintended load paths or may create unanticipated and unacceptable stress raisers.

Acceptable steels for weld backing are defined in AWS D1.1, clause 5.2.2. Various kinds of unacceptable materials have been inappropriately used over the years, including reinforcing steel. Only code-listed materials should be used. AWS D1.1 requires that backing be of a suitable thickness to prevent melt-through and recommends minimum backing thicknesses in the Commentary, based on the welding process to be used. The fit-up of backing to the back side of the joint is held to a maximum of 1⁄16 in. (2 mm) according to AWS D1.1, clause 5.21.1.1. At times, this requirement is difficult to achieve, and solutions for overcoming these fit-up problems are discussed in Section 15.6 of this Guide.

Steel backing is required to be continuous for the length of the joint (see AWS D1.1, clause 5.9.1.2), except as exempted under specific conditions that will be discussed. Consider steel backing that is parallel to the stress field in a longitudinal member, such as a box section. If segments of backing

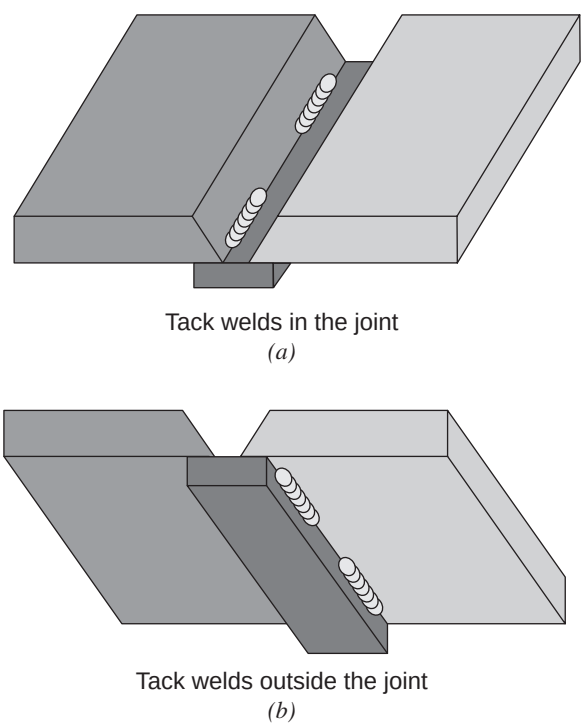

Fig. 4-29. Backing with (a) tack welds inside, versus (b) outside the joint.

are used in a single joint, the intersections between the backing segments create a stress raiser perpendicular to the stress field as shown in Figure 4-16. This is particularly harmful for structures subject to cyclic loading, but has also led to problems with statically loaded applications. If segments of backing must be used in one joint, AWS D1.1 permits the backing segments to be joined to each other with CJP groove welds before being added to the longitudinal joint.

It is typical to use tack welds to hold steel backing in place prior to the weld being deposited. Tack welds can be placed in the joint, which is generally preferred, as shown in Figure 4-29(a), or alternately, backing can be tack welded on the back side of the joint as shown in Figure 4-29(b).

The groove weld is expected to fuse to backing according to AWS D1.1, clause 5.9.1.1. Fusion to backing can be evaluated when test welds are made, but there is no practical means by which fusion to backing can be evaluated on a production weld.

The removal of backing is dependent on the type of loading or the appearance expected. For statically loaded structures, the backing is permitted to be left in place, and attaching welds need not be full length unless otherwise specified by the engineer (AWS D1.1, clause 5.9.1.5). For cyclically loaded structures, steel backing in welds that are transverse to the direction of computed stress is typically removed, although for some fatigue details with low stress range capabilities backing is allowed to remain in place. AWS D1.1, clause 5.9.1.4(2), states that backing on welds that are parallel to the direction of stress is not required to be removed; in those applications, AISC *Specification* Appendix 3, Section 3.5 states that if backing is held in place with welds outside the joint, the welds are required to be continuous. (Also see Chapter 12 of this Guide.) For structures designed to resist seismic loading, the AISC *Seismic Provisions* and AISC *Prequalified Connections* require backing to be removed from some joints in seismic applications. (Also see Chapter 11 of this Guide.) For AESS applications, exposed backing is typically required to be removed (AISC, 2016a).

In 2010, AWS D1.1 introduced new provisions in clause 5.9.1.2 that allowed for discontinuous backing in two specific applications. The first involves statically loaded connections made at the ends of HSS where backing may be made from one piece or from two pieces, as shown in Figure 4-30. The interruption in the backing is not permitted to be in the corners, as shown in Figure 4-31. Other rules that apply to this special exception are not repeated here. The interruption in the backing is expected to be parallel to the stress field and therefore does not create a harmful stress raiser. This option is not extended to T-, K- and Y-type connections that do not involve ends of HSS (only one end is involved in such

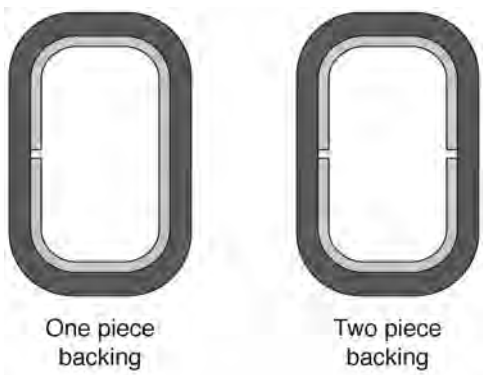

Fig. 4-30. Discontinuous backing—permitted.

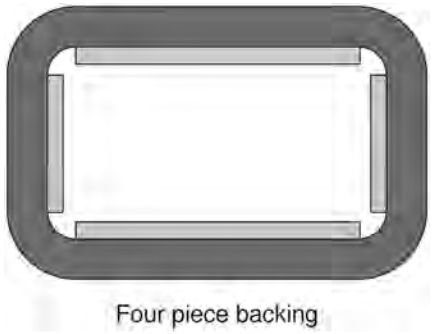

Fig. 4-31. Discontinuous backing—not permitted.

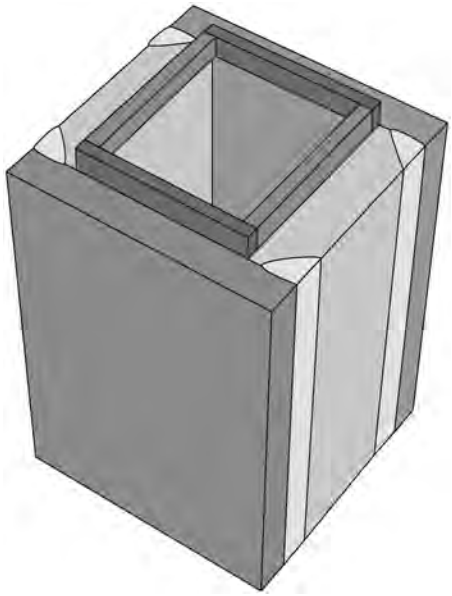

Fig. 4-32. Discontinuous backing—permitted.

connections), and the option cannot be applied when splices are closely located to other types of connections.

The second exception involves field splicing of statically loaded box columns as shown in Figure 4-32. Four pieces of steel can be used for the backing of these column splice welds, leaving discontinuous interruptions at the corners. Again, the expected stresses will be parallel to these geometric interruptions so harmful stress raisers are not created.

When steel backing is left in place in T- and corner joints, CJP groove welds subject to tension normal (i.e., perpendicular) to their longitudinal axis are to be made with filler metal that can achieve a minimum CVN toughness of 20 ft-lb (27 J) when tested at +40°F (4°C) or lower. If this is not done, the weld is to be designed as a PJP groove weld (AISC, 2016d).

Ceramic Backing

Ceramic backing consists of a series of ceramic tiles affixed to an adhesive tape that can be attached to the root side of a joint. The high melting point of the ceramic permits this material to contain the molten pool of weld metal. In situations where steel backing is required to be removed, the contractor may choose to use ceramic backing as it is nonfusible and can easily be removed after the weld is completed.

A challenge in using ceramic backing comes from the nonelectrically conductive nature of ceramics. For arc welding, a complete electrical circuit is required. While the welding current can flow from the electrode to the steel pieces being joined, current cannot be conducted through the ceramic. The welder must therefore establish a bridge of weld metal between the two pieces being joined over the ceramic backing. Once this has been done, welding can proceed as long as the arc is always maintained against this bridge.

Ceramic has low thermal conductivity properties. As a result, welds made on ceramic backing are primarily cooled by conduction of the thermal energy into the surrounding steel. Welding procedures that work well with thermally conductive steel backing may not work on ceramic backing; solidification cracking has occurred on welds made with ceramic backing where no such cracking occurred when the same procedure was applied with steel backing.

While AWS D1.1 specifically permits the use of ceramic backing, none of the prequalified joint details use it, thus welding procedure specifications (WPS) that call for ceramic backing must be qualified by test. An exception to this practice was introduced into D1.1 in 2015; the exception is discussed in the section on copper backing and is equally applicable to ceramic backing. AWS D1.8 has additional requirements for welder qualification when production WPS list ceramic backing and the welder is required to pass the restricted access welder qualification test (see Section 11.5.3 of this Guide).

Copper Backing

Backing can be made of copper; when properly used, the steel weld does not fuse to the copper backing. When the weld is complete, the copper backing is removed and can be reused. Typically, copper backing is held in place with mechanical clamps and brackets.

Copper has a lower melting point than steel but a much higher rate of thermal conductivity. When the molten steel weld puddle comes into contact with the copper, the thermal energy is conducted away, raising the temperature of the copper but not melting it. This is a delicate balance, and it is easy to inadvertently melt the copper, causing several problems. If melted, the copper backing will no longer be easy to remove, and the backing may be so damaged as to preclude its reuse. When the copper backing melts, it introduces copper into the weld metal, and this addition may cause cracking in the weld metal. Therefore, care must be taken to avoid melting the copper. Also, the higher thermal conductivity rate associated with copper as compared to steel may result in root pass cooling rates that result in unacceptable mechanical properties or lead to cracking.

While AWS D1.1 specifically permits the use of copper backing, none of the prequalified joint details use it, thus WPS that call for copper backing must be qualified by test, except as permitted under special conditions discussed in the following. In 2015, a new method was provided in AWS D1.1, clause 3.13.2.1, as an option for the use of copper backing (and other nonsteel backing, including ceramic) with prequalified WPS. The option applies to prequalified CJP groove welds detailed without steel backing or spacing bars, that is, the details that are normally used for double-sided joints and that require backgouging. In Figure 4-33(a), a B-U2 prequalified groove weld detail has been selected to illustrate the concept. As shown in Figure 4-33(b), the copper backing precludes melt-through, but the arc does not directly contact the copper when the weld is made. After welding, the backing is removed, as shown in Figure 4-33(c). The assembly is then rotated as shown in Figure 4-33(d), the joint backgouged to sound metal as shown in Figure 4-33(e), and finally back welded as shown in Figure 4-33(f). The backgouging ensures through thickness fusion when the joint is back welded.

The preceding paragraph describes the use of copper backing to illustrate the changes made in 2015 to AWS D1.1. The changes permit the use of copper in this manner, but are more inclusive than only copper; any nonsteel backing can be used in this matter with prequalified WPS. For nonsteel backing applications that do not comply with the requirements of AWS D1.1, clause 3.13.2.1, WPS qualification testing remains an option. Additional requirements for welder qualification apply for seismic projects when production WPS list copper backing or other nonsteel backing according to AWS D1.8, clause 5.1.3.

4.2.4 Fillers

A filler is defined in the AISC *Specification* Glossary as a "plate used to build up the thickness of one component." Fillers are typically used in conjunction with bolted connections, although fillers can be used in welded connections as well. See Figure 4-34.

When used in welded connections, there are two basic approaches taken toward the design of such connections, depending on the thickness of the filler. When fillers are less than ¼ in. (6 mm) thick, or when fillers are too thin to transfer the applied forces through the filler, the connection is designed so that the applied force is not transferred through the filler; the filler simply functions as a spacer in such situations. The weld must be sized to permit the stress to be transferred from the main member into the lapped plate without relying on transfer through the filler as shown in Figure 4-34(a). The weld size must be increased by the thickness of the filler and the end of the filler is concurrent with the end of the connection plate in this situation, as stipulated in AWS D1.1, clause 2.11.1.

When fillers are greater than ¼ in. (6 mm), and when they are thick enough to transfer the applied forces through the filler, the connection is designed so that the applied force is transferred through the filler as shown in Figure 4-34(b). AWS D1.1, clause 2.11.2, requires that the filler plate extend beyond the end of the connection plate, and both the welds and the filler plate must be of sufficient size to transfer the loads involved. Figure 4-34(c) shows a detail that is not preferred. The capacity of the connection will be controlled by the small fillet weld on the edge of the thin filler.

Filler plates were popular during the period when the transition was being made from riveted designs to welded designs. Today, fillers may be used for connections that involve welds to one member and bolts to the other. However, for all-welded connections, the preferred practice is to avoid the use of fillers altogether and use direct-welded butt joints instead.

4.2.5 Shelf Bars

Shelf bars are defined in AWS D1.1, Annex J, as "steel plates, bars, or similar elements used to support the overflow of excess weld metal deposited in a horizontal groove weld joint." An example of a shelf bar is shown in Figure 4-35. Shelf bars are to follow the same rules for steel backing in terms of their composition according to AWS D1.1, clause

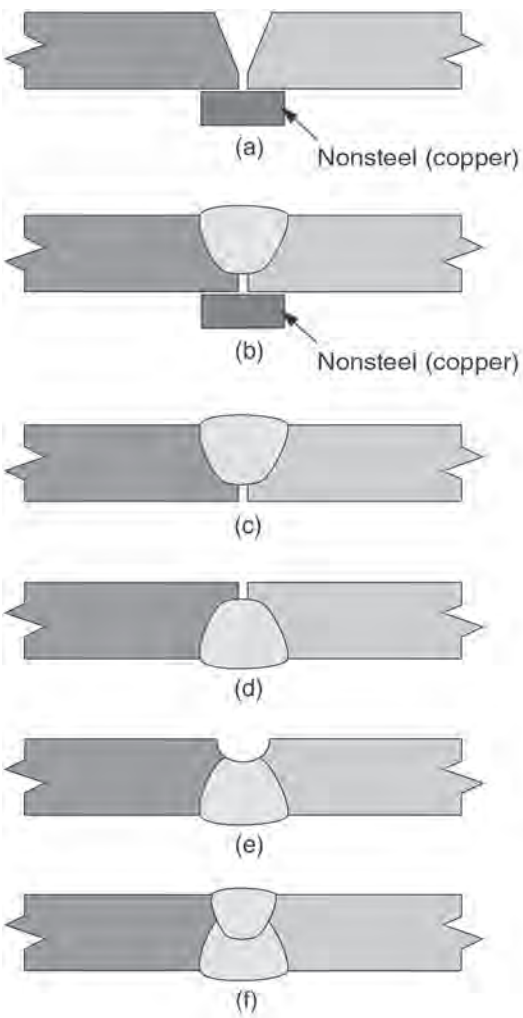

Fig. 4-33. Prequalified copper backing detail.

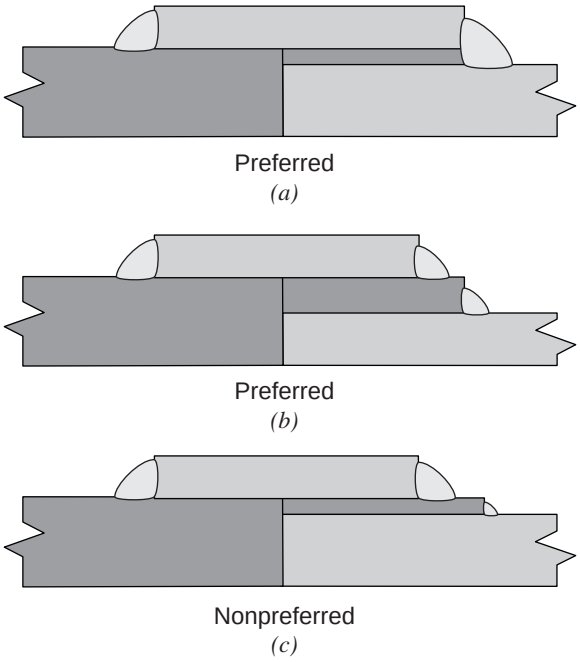

Fig. 4-34. Filler plate details—acceptable and unacceptable.

5.2.2.2. AWS D1.1, clause 5.23.4, allows shelf bars to remain in place for statically loaded structures; if removal is required, this should be specified in the contract documents. Even when contract documents require removal of weld backing or tabs, it should not be assumed that the contractor will automatically remove shelf bars, unless their removal is specified.

For cyclically loaded applications, shelf bars are not permitted and must be removed. For seismic applications, AWS D1.8 is silent on the topic of shelf bars. Prohibiting shelf bars from being used on seismic projects is probably the most straightforward way of addressing this issue for seismic applications. If shelf bars are permitted for seismic projects, removal of the bars after welding should be specified.

4.2.6 Boxing (End Returns)

Boxing is defined as "the continuation of a fillet weld around the corner of a member as an extension of the principal weld" (AWS, 2010d). *Boxing* is the term preferred by AWS A3.0, but *end returns* is the term used in both AWS D1.1 and the AISC *Specification* and is more commonly used. End returns are used to ensure quality terminations to welds and to provide some resistance to prying of the weld roots. End returns may be included in determining the total weld length according to AWS D.1.1, clause 2.4.2.1. In general, end returns are neither prohibited nor required. When they are used, certain rules may apply.

For cyclically loaded connections, AISC *Specification* Appendix 3, Section 3.5, requires end returns in certain situations, along with minimum and maximum lengths on such welds.

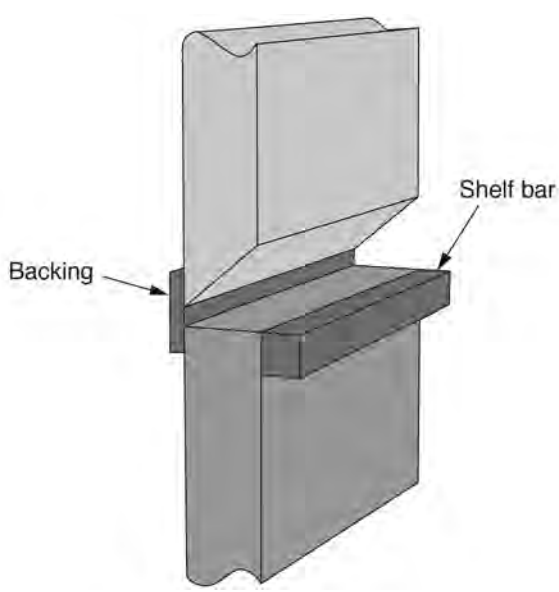

Fig. 4-35. Shelf bar used to support liquid weld metal.

4.2.7 Weld Termination (Fillet Welds)

The general topic of fillet weld termination deals with the issue of the length of the fillet weld as compared to the length of the joint. Three options exist: the fillet weld may stop short of the end of the part, may extend to the end of the part, or may wrap around the end of the part (i.e., the weld may have an end return or boxing). All three options are illustrated in Figure 4-36.

While it may seem desirable for fillet welds to extend to the ends of the parts, or even to wrap around the ends of parts, such an approach overlooks the reality of production welding. It is difficult for welders to initiate an arc at the exact end of a part, and then difficult to make a full-sized weld all the way to the end of the part, complete with a filled crater. The issue is not one of skill, but rather due to two conditions: thermal conductivity and arc blow.

At locations along the weld other than at the ends of the part, the thermal energy introduced into the weld metal is conducted away in three dimensions. As the end of the part is reached, there is a buildup of thermal energy. During crater

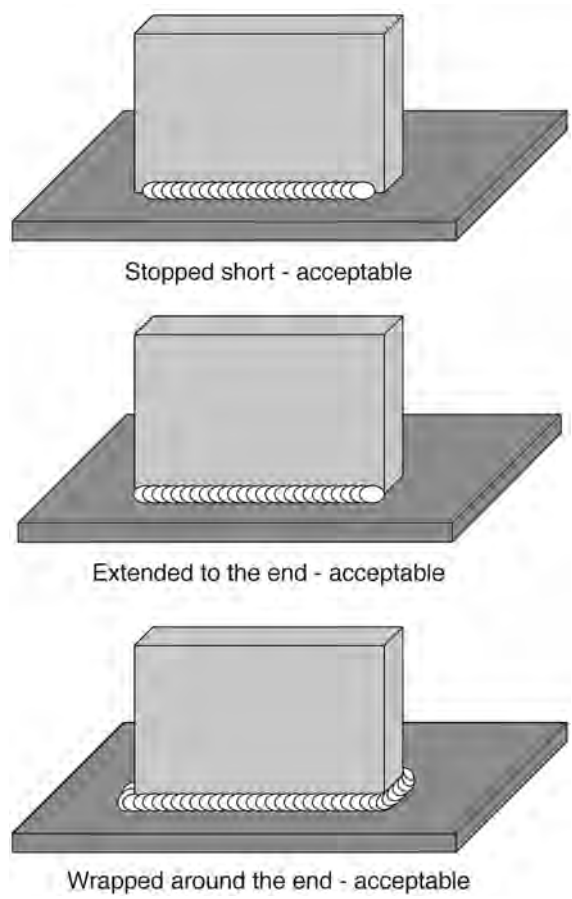

Fig. 4-36. Fillet weld termination options.

filling, the extra hot base metal may lead to unacceptable undercutting and other weld discontinuities at the end.

When welding with direct current (as is typical), the electrical current creates a magnetic field that surrounds the arc. Away from the ends of the joint, the magnetic field is uniformly distributed in the steel around the arc. When approaching the end of the part, the magnetic field becomes concentrated and may deflect the arc and make it difficult or even impossible to deposit a quality weld; this condition is known as arc blow.

For these two reasons, unless there is a specific design reason to do otherwise, it is generally preferred to start and terminate a fillet weld a short distance before the end of the joint. Various approaches have been used by AWS D1.1 and the AISC *Specification* over the years, and each approach has resulted in unintended consequences as will be discussed. In 2016, the AISC *Specification* approached the subject in yet another manner, as will also be discussed.

In the past, codes have used phrases such as "welds shall terminate approximately one weld size from the end of the joint." This language led to the unintended consequence of inspectors requiring the ends of quality welds to be removed should they extend to the end of the joint, even though there was no technical justification for it. As of 2010, the AISC *Specification* permitted fillet welds to either extend to the end of the piece or to be stopped approximately one weld size short, except for some specific situations where additional requirements apply; in some cases, hold-back dimensions were mandated. However, even for the limited number of special situations, there were routine applications where deviations were needed.

The AISC *Specification* employed a new approach in 2016: The end result was mandated and the means to achieve the end result were left open. AISC *Specification* Section J2.2b(g) states, "Fillet weld terminations shall be detailed in a manner that does not result in a notch in the base metal subject to applied tension loads. Components shall not be connected by welds where the weld would prevent the deformation required to provide assumed design conditions." A User Note then provides this guidance, "Fillet weld terminations should be detailed in a manner that does not result in a notch in the base metal transverse to applied tension loads that can occur as a result of normal fabrication. An accepted practice to avoid notches in base metal is to stop fillet welds short of the edge of the base metal by a length approximately equal to the size of the weld. In most welds, the effect of stopping short can be neglected in strength calculations."

The AISC *Specification* Commentary then discusses four situations deserving of attention; the same four conditions that formerly had mandated specific hold-back or end-return dimensions. The first involves attachments where flexibility is expected, as is the case with simple clip-angle connections as shown in Figure 4-37. When end returns are used, AISC *Specification* Commentary Section J2.2b(2) recommends that they not exceed four times the weld size. This permits the unwelded portion of the member to flex. End returns are typically supplied for this situation to preclude straining about the weld root.

Another situation involves a fillet weld that joins transverse stiffeners to the webs of plate girders, as discussed in AISC *Specification* Commentary Section J2.2b(3) and as shown in Figure 4-38. For girders with stiffeners not welded to the flange (the typical case), the fillet welds joining the stiffeners to the webs are suggested to be held back no more than six times the web thickness. The hold-back dimension is measured from the toe on the weld of the web-to-flange connection to the end of the weld of the stiffener. Experience

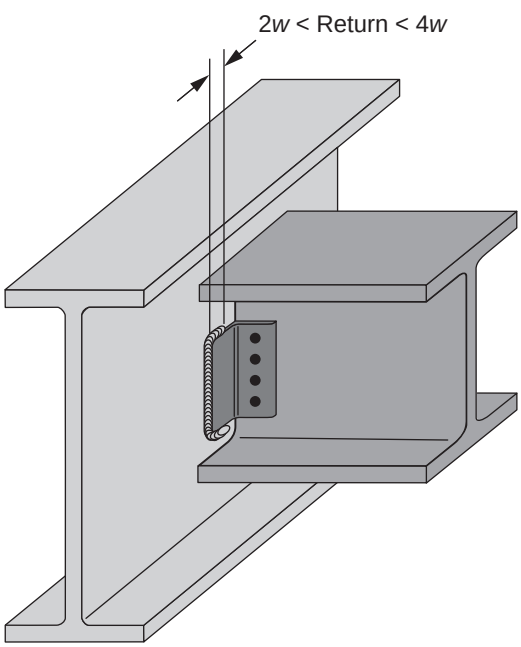

Fig. 4-37. End returns at flexible connections.

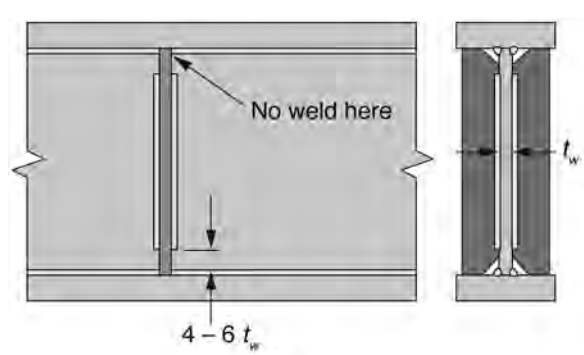

Fig. 4-38. Hold-back dimensions.

has shown that if this distance is not maintained, cracking can occur at the end of the weld during shipping of the girders due to slight flexing of the web with respect to the flange. Providing this hold-back dimension gives the web some ability to flex and accommodate the strains imposed by shipping (Fisher, 1984). This distance need not be maintained for heavier webs, which are stiffer, nor for situations where the stiffener is welded to the flange because there is no relative movement of the web with respect to the flange. Excessive hold-back dimensions may result in localized buckling. It is important to recognize that the Commentary advice is to preclude shipping damage and is not offered to address any serviceability issues. The same situation is addressed in AWS D1.1, clause 2.9.3.4.

When welds are made on the opposite side of a common plane, it may be desirable to interrupt the weld at the corner common to both welds as discussed in AISC *Specification* Commentary Section J2.2b(4) and as shown in Figure 4-39. This weld interruption was formerly mandated by both AWS D1.1 and the AISC *Specification* and was frequently problematic in its implementation. There are many situations where a sealed joint is desired, such as in corrosive environments or for AESS, where rust bleed-out from an unsealed joint would be unsightly. Accordingly, it was routine to have a requirement to seal the joint, only to later discover the conflict with one of these other standards.

The formerly mandated condition was not for serviceability reasons but rather to avoid a difficult situation from a workmanship viewpoint. In 2015, AWS D1.1, clause 2.9.3.5, extended an alternative to the requirement—the hold-back is still required, but sealed joints are permissible when specified in the contract.

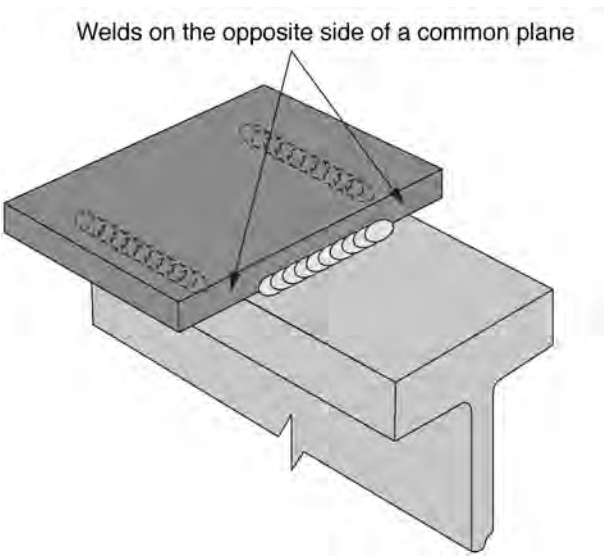

Fig. 4-39. Welds on opposite sides of a common plane.

The final example is discussed in AISC *Specification* Commentary Section J2.2b(1) and is illustrated in Figure 4-40. This hold-back dimension applies to fillet welds in lap joints that connect to a part subject to tensile stress; the hold-back is recommended to eliminate the possibility of a weld crater or undercut on a tension member. Notice that any welding problems would be on the edge of the tension member—that is, at a critical location. AWS D1.1, clause 2.9.3.2, mandates this hold-back dimension, whereas the AISC *Specification* leaves it up to the engineer to determine where hold-backs are required.

AWS D1.1, clause 2.3.4, requires that hold-back dimensions and end return dimensions, when required for design purposes, be shown on contract drawings. AWS D1.1, clause 2.3.5.2, requires shop drawings to show end return and hold-back dimensions.

Hold-back dimensions are normally discussed in terms of one-weld size. Thus a ¼-in. (6 mm) fillet weld would have a hold-back dimension of an equal size. This approach is reasonable for single-pass welds, but it is illogical when applied to large, multiple-pass welds. Consider a 1-in. (25 mm) fillet weld, for example. The individual weld passes will likely approximate the size of a 5⁄16-in. (8 mm) fillet weld. A reasonable hold-back dimension for the 1-in. (25 mm) fillet weld would be approximately 5⁄16 in. (8 mm). Some allowance for cascading of the ends of the multiple-pass welds should also be made, but a 1-in. (25 mm) hold-back would be unreasonable.

4.2.8 Fillet Weld Shelf Dimensions

When one member that lands on another is to be welded as shown in Figure 4-41(a), it is important that there be an adequate shelf dimension on which the weld can be deposited. It is not desirable, for example, for the shelf dimension to be the same size as the fillet weld leg dimension; in production, excessive melting will likely be experienced.

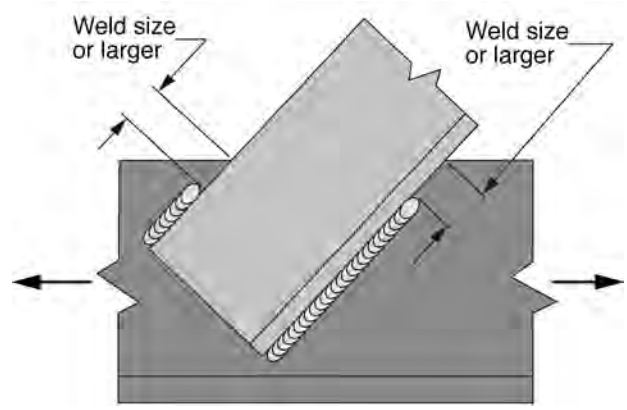

Fig. 4-40. Termination of welds near edges.

The shelf dimension should be a minimum of ¼ in. (6 mm) larger than the fillet weld leg size as shown in Figure 4-41(b) and discussed in the AISC *Manual* Part 8 (AISC, 2017). An inadequate shelf dimension may lead to undesirable melting of the edge as shown in Figure 4-41(c).

The concept of fillet weld shelf dimensions is sometimes confused with the maximum fillet weld size on edges where the maximum size is 1⁄16 in. (2 mm) less than the thickness of the edge on which the fillet weld is made (see Section 3.5.2 of this Guide). The edge welding constraints are in place to preclude excessive melting of the upper edge, whereas the shelf dimensions are provided to preclude excessive melting of the lower edge.

The AISC *Manual* contains illustrations in Part 8 where a shelf dimension should be provided.

4.3 SPECIFIC WELDED CONNECTIONS

4.3.1 Column-to-Base Plate

Column-to-base plate connections may be made with fillet, PJP groove or CJP groove welds. The selection of fillet welds versus PJP groove welds is typically based on weld size and economics—for welds requiring throat dimensions greater than ¾ in. (18 mm), PJP groove welds are usually preferred. Otherwise, given the two options, fillet welds are usually specified.

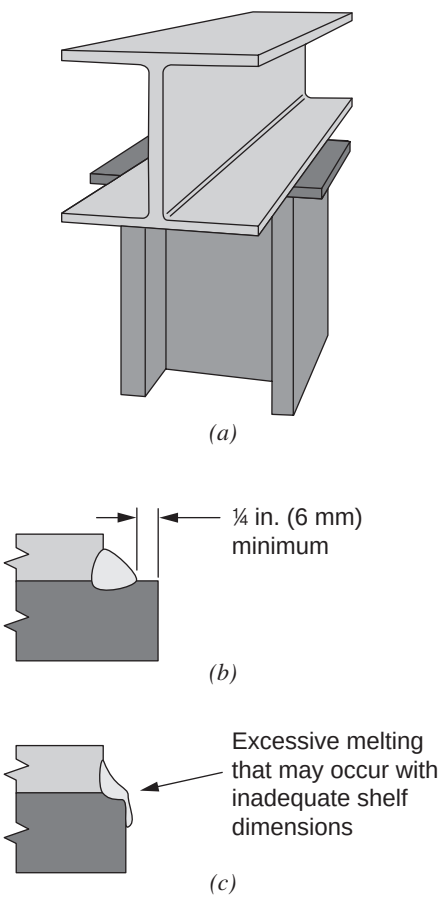

Fig. 4-41. Fillet weld shelf dimensions.

A common error in detailing column-to-base plate welds is the overuse of the weld-all-around symbol. When this is specified, welding in the *k*-area is specified, as well as on the tips of the column flanges. See Section 5.2.4 for information on the *k*-area. Additionally, the column would likely need to be positioned in the shop four times to make welds all around the column; proper detailing can permit horizontal position welding for all necessary welds in a single column position.

4.3.2 Column Splices

Column splices are made in the field. Erection devices permit temporary location of the upper column shaft; for wide-flange columns, the field connection of the web is often made by field bolting to a shop-welded lap plate. Once the column is temporarily secured, field flange welds are made. The flange welds are usually PJP groove welds, but CJP groove welds may be justified in some situations. Column splice welds are usually one-sided welds, which permit all the welding to be performed on the outside of the column. For thicker column flanges, typically over 3 in. (75 mm), the required weld volume can be reduced by using double-sided welds. Double-sided welds are more difficult to make because the welds on the inside of the column have more access restrictions and require welding through an access hole in the web.

The location of the column splice should be detailed such that the welder has good access to the joint. Ideally, the splice will be approximately 5 ft (1.5 m) above the floor—this permits the welder to stand on decking and make the weld in a comfortable position. Splice locations that require welders to stand on a ladder, or worse, lie down on their stomachs, should be avoided. Column splices should be located at a height so that OSHA-required perimeter protection can be installed prior to column splicing activities (Boulanger et al., 2016).

When CJP column splices are required, weld access holes must be cut in the column web to allow for the insertion of backing or, in the case of a double-sided weld, to allow for welding from both sides.

Splicing of box columns is more complicated, requiring more complex erection aids. Box columns are usually made with longitudinal PJP groove welds, although regions where beams intersect columns may require CJP groove welds. This leaves an unfused region at the end of the column section in the root of the PJP, as shown in Figure 4-42(b). For field splicing of box columns when the field weld requires the use of CJP groove welds, the unfused area on the end of the

column should be seal welded as shown in Figure 4-42(c). While not required by AWS D1.1 or the AISC *Specification*, experience has shown that failure to provide this seal weld often leads to transverse cracking in the column splice weld. The seal welds should be applied to the ends of both the upper and lower column sections.

Box-column splices that use CJP groove welds may be backed with discontinuous backing (see Section 4.2.3 of this Guide).

Column splices will typically involve a change in the footweight of the wide-flange shape. When this is the case, the lower shaft with a thicker flange provides a helpful shelf to support liquid weld metal. When the upper and lower column segments have the same flange thickness, shelf bars may be utilized (see Section 4.2.5 of this Guide).

4.3.3 Web Doublers

A web doubler is a "plate added to, and parallel with, a beam or column web to increase the strength at locations of concentrated forces" (AWS, 2016). Web doublers are usually added to column webs to provide for a stronger panel zone in areas where moment connections are to be added. In the common configuration when the doubler is flush against the web, there are two types of welds: doubler-to-web flange intersection welds and doubler-to-web welds along the ends of the doubler. In some cases, plug or slot welds are added to keep the doubler from separating from the web.

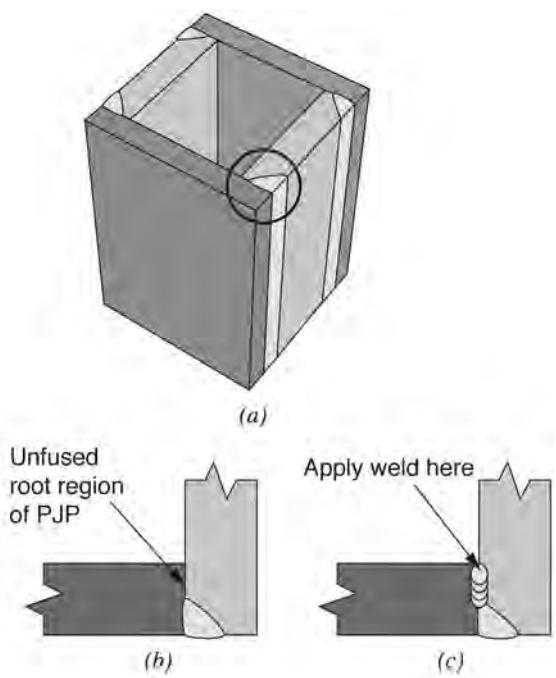

Fig. 4-42. Seal weld added to prevent transverse cracking.

Regarding the longitudinal weld of the doubler-to-web-flange intersections, there has been a debate as to whether these welds actually are CJP or PJP groove welds. Properly made, the weld replicates the strength of the attached web doubler and in this sense, it is a CJP groove weld. However, as soon as a weld is deemed a CJP groove weld, some people are predisposed to require NDT for the weld, which in this case has little technical justification given the loading that is associated with the weld. Another issue involved the identity of weld groove type; it was sometimes called a J-groove weld, even though the web-to-flange radius on hot-rolled shapes did not comply with the prequalified J-groove weld geometries. With little technical justification other than the joint geometry was not listed in AWS D1.1, contractors have been required to qualify WPS for making this web doubler weld.

AWS D1.8:2016 (AWS, 2016) was the first AWS standard to specifically address the aforementioned weld, avoiding the issue of whether it is a PJP or CJP groove weld, and rather identified it as a doubler plate weld joint and defined the joint geometry to be used in clause 4.3. The prequalified geometry included a bevel on the doubler plate to ensure adequate access to the weld root. The incorporation of the detail into the more conservative seismic welding supplement should justify the use of the same detail for AWS D1.1 projects, although AWS D1.1:2015 (AWS, 2015c) does not include the detail.

Regarding the welds along the ends of the doubler plate, the topic of the *k*-area should be considered (see Section 5.2 of this Guide). The AISC *Specification* does not prohibit welding in the *k*-area; however, when welding is performed in this area, AISC *Specification* Table N5.4-3 requires mandatory visual inspection of the region.

These *k*-area inspections can be avoided altogether by avoiding welding in the *k*-area, as shown in Figure 4-43. Drawings can specify that welding is not to be performed in the *k*-area as shown in Figure 4-43(b), and welders can be trained to not weld in this region. However, a more robust approach is shown in Figure 4-43(c). The doubler plate is made with corner snipes so as to preclude welding in the *k*-area when welding is performed along the end of the doubler but not on the diagonal cut associated with the snip.

Attempts to avoid welding in the *k*-area, combined with a misunderstanding of what is actually defined as the *k*-area, have resulted in errors like those shown in Figure 4-44. A common misunderstanding is that the *k*-area includes the radius itself. With this misunderstanding, doublers have been detailed to clear the radius, but actually require welding in the true *k*-area—not only is welding to be performed in the precise location where welding is to be avoided, access for making the weld is also restricted.

In lieu of web doublers that fit tight to column webs, doublers can be offset from the web and attached to flanges only as shown in Figure 4-45. This approach avoids all the *k*-area welding challenges (Lee et al., 2002).

4.3.4 Column Stiffeners/Continuity Plates

Column stiffeners, sometimes called continuity plates or horizontal stiffeners, are added to columns at a location (elevation) where beams will eventually be added. Two types of welds are involved: the stiffener to flange welds and the stiffener to web welds. The welds may be CJP groove, PJP groove or fillet welds.

Column stiffeners are normally welded in the fabrication shop where two basic approaches are used. The first involves welding stiffeners with the column in the vertical orientation and the stiffener oriented horizontally. The column is inserted into a pit within the fabrication shop where platforms allow the welder to access the joint. The pit approach allows for one-sided CJP groove welds to be made in the flat position.

The alternative approach involves welding stiffeners with the column in the horizontal position and the stiffeners oriented vertically; if CJP groove welds are required, two-sided welds are made, welding from each side of the stiffener. When welds are made in this manner, the amount of weld metal deposited is inevitably greater than when single-sided CJP groove welds are made in the pit because a flat-faced groove weld is nearly impossible to achieve in the horizontal position. When the latter approach is used, the column must be repositioned several times to make the required welds.

To fit the rectangular stiffener plate inside a rolled wide-flange section, the corners must be modified with a snip or cutout. This precludes the deposition of full-length welds. For large groove welds, it may be desirable to insert weld tabs into this region, but small snipes or cutouts preclude this. If tabs are used, and if tab removal after welding is mandated, thermal cutting in this confined space can cause more harm than good. AWS D1.8 allows the ends of welds to cascade near the snip or cutout, providing practical relief from full-sized welds in this area, as can be seen in AWS D1.8, Commentary Figure C-6.3 (AWS, 2016).

For some fabricators who perform pit welding, a practical solution for welding horizontal stiffeners is to provide a continuous CJP groove weld without the use of a snip or cutout. A single piece of U-shaped backing is applied. This approach eliminates concerns about weld terminations near the column web-to-flange radius, but involves welding in the *k*-area, therefore inspection of the region after welding is required for rotary-straightened column sections.

Electroslag welding (ESW) has also been used to make stiffener-to-column flange welds. One approach uses two column stiffener plates, as would be used for traditional welding processes. A hole is drilled into the column web; ESW is then used to weld one stiffener to the flange, carry the weld pool through the hole, and then weld the other stiffener to the flange. The process is repeated on the opposite flange. Finally, the stiffener plate is welded to the web using conventional processes.

The second ESW approach involves cutting a slot in the column web and providing a V-groove preparation to the beam web. Next, a single stiffener plate is inserted into the slot in the web. The ESW welds are made between the stiffener and flanges, and the stiffener is welded to the web with conventional processes.

The previous discussion is provided to demonstrate that there are a variety of acceptable means by which contractors can produce horizontal stiffener welds. The contractor's means and methods may be such that substitution of CJP groove welds for the specific PJP or fillet alternatives may be a cost effective alternative to the welds that are normally considered lower cost alternatives.

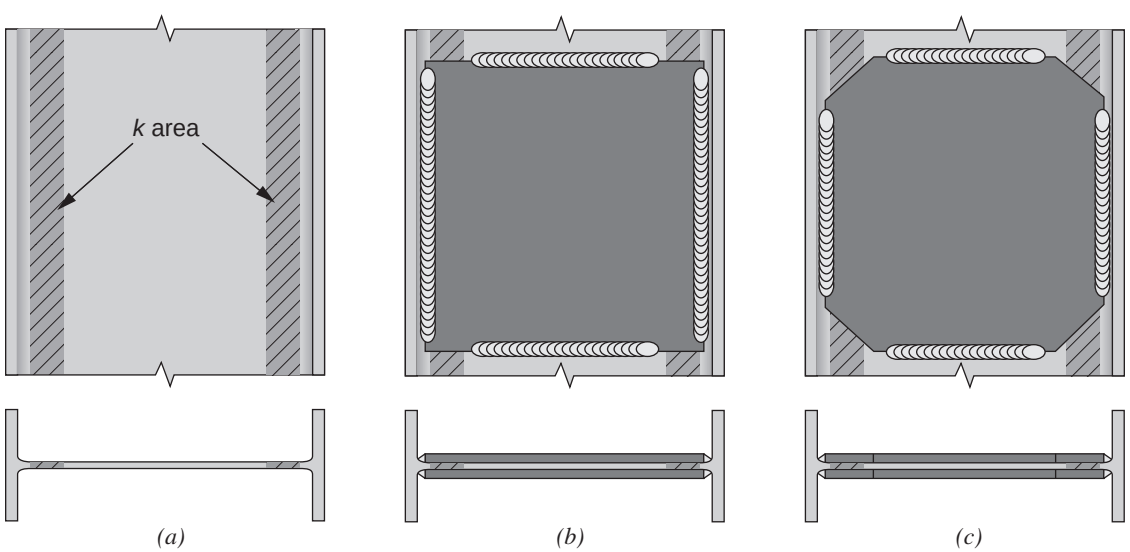

Fig. 4-43. Methods of attaching a web doubler plate.

For rolled wide-flange columns where *k*-area welding is of concern (see Section 5.2.4 of this Guide), stiffener plates are often detailed with snipes that are large enough to preclude inadvertent welding in this region. The AISC *Specification* does not prohibit welding in the *k*-area; however, when welding is performed in this area, AISC *Specification* Table N5.4-3 requires mandatory visual inspection of this region.

Box column stiffener plate welding requires careful planning, and the use of ESW is preferred for at least one side of the stiffener. It is possible to fabricate a box column in a U-shape, welding three sides of the stiffener with conventional welding processes before welding the final side of the box in place. To weld the final seam, holes are drilled through the flanges, allowing for a single vertical ESW weld to be made. Steel shoes (or dams, which can also be called backing) are used in such cases and are left in place after welding, becoming part of the final structure. Care should be taken to ensure that the unfused interfaces between the left-in-place steel shoes do not create unacceptable stress raisers.

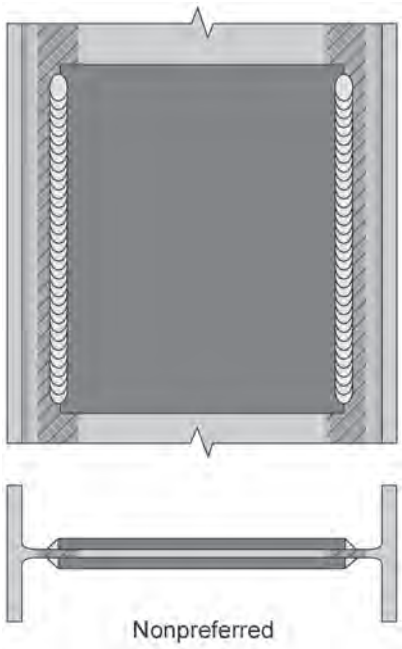

Fig. 4-44. Nonpreferred method of attaching a web doubler plate.

4.3.5 Connections with Shear Lag Concerns

Shear lag is defined as "the nonuninform tensile stress distribution in a member or connecting element in the vicinity

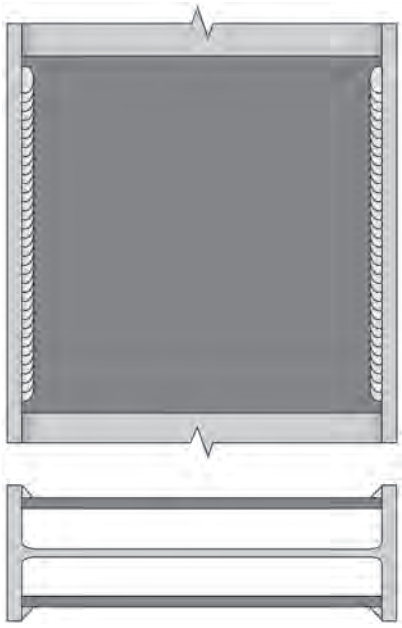

Fig. 4-45. Doubler detail to eliminate welding in the k*-area.*

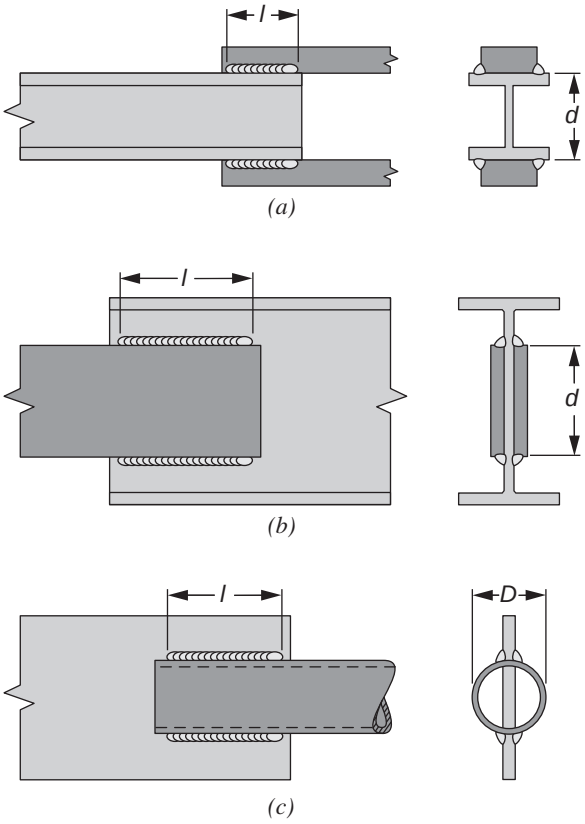

Fig. 4-46. Connections where shear lag should be evaluated.

of a connection" (AISC, 2016d). In tension members where the tension load is transmitted directly to each of the cross-sectional elements by welds, there are no shear lag concerns. However, when connections are made between members with different cross sections, or when connections are made to only parts of the cross section, shear lag must be considered. Figure 4-46 contains several examples of where shear lag would occur.

In a tensile member, stresses away from the connection are distributed across the cross section of the member in a uniform manner. This uniformity does not extend to the connection, however. Those stresses must flow through the welds in the connection and into the adjoining member. The resultant nonuniform tensile stresses may locally exceed acceptable stress levels, depending on the geometry of the connection.

Two basic approaches are possible to deal with the issue of shear lag. One method is to reduce the stresses in the connection to a safe level. Alternately, the connection can be reconfigured so that the nonuniformity is reduced to acceptable levels. AISC *Specification* Section D3 deals with the issue of shear lag. The effective area, A_e, is determined by multiplying the net area, A_n, by a shear lag factor, U, that is geometry dependent; values for U cannot exceed 1.0. The more severe the shear lag, the lower will be the value for U. AISC *Specification* Table D3.1 provides equations to determine shear lag for various geometric conditions. Most of the equations contain a term related to the length, l, of the connection, and an eccentricity factor, $\bar{x}$. The shear lag factor, U, is determined, in part, by multiplying a geometry factor times a factor of $1 - \bar{x}/l$. The closer this term is to 1.0, the smaller the shear lag. Thus, to reduce the shear lag, the eccentricity factor should be low and the length should be high. The value of U never needs to be less than the ratio of the areas of the connected materials.

To illustrate the use of the shear lag factor, a rectangular HSS attached to two side gusset plates will be used as an example, as shown in Figures 4-47 and 4-48. From AISC *Specification* Table D3.1, Case 6, the following data are obtained that are applicable to this geometry:

For $l \geq H$:

$$U = 1 - \bar{x}/l$$

$$\bar{x} = \frac{B^2}{4(B + H)}$$

where

B = overall width of rectangular HSS member, measured 90° to the plane of the connection, in. (mm)

H = overall height of rectangular HSS member, measured in the plane of the connection, in. (mm)

l = length of connection, in. (mm)

To consider the effects of variables on the shear lag factor, the use of a 4-in. × 6-in. (100 mm × 150 mm) rectangular HSS is used. In the first set of examples, the gusset plates are attached to the 6-in. (150 mm) side as shown in Figure 4-47. For this configuration, the eccentricity factor, $\bar{x}$, is only 0.4 in. (10 mm), and shear lag effects will be minimal. Next, the length, l, to height, H, ratio will be varied from 1:1, to 1.5:1, and to 2:1. Alternately stated, three lengths will be considered: 6 in. (150 mm), 9 in. (225 mm) and 12 in. (300 mm). Given these relationships, U is 0.93, 0.96 and 0.97, respectively, for the three conditions considered.

To evaluate the effect of the eccentricity, the same HSS will be used, but with a different orientation as shown in Figure 4-48. Here, the gusset plates are attached to the 4-in. (100 mm) side. For this configuration, the eccentricity factor, $\bar{x}$, is 0.9 in. (22.5 mm), and thus shear lag effects will be

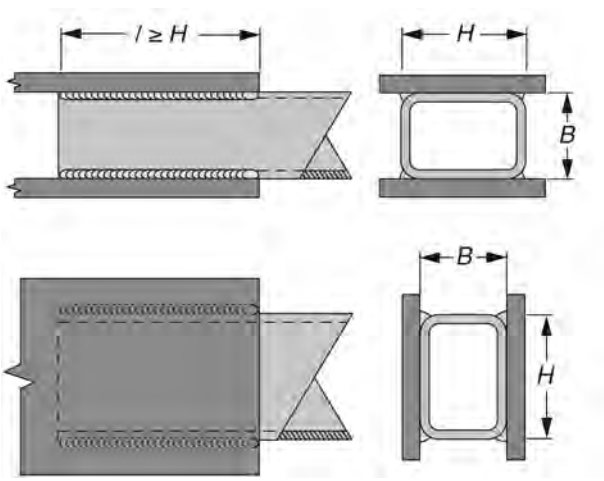

Fig. 4-47. Plates connected to the longer side of an HSS.

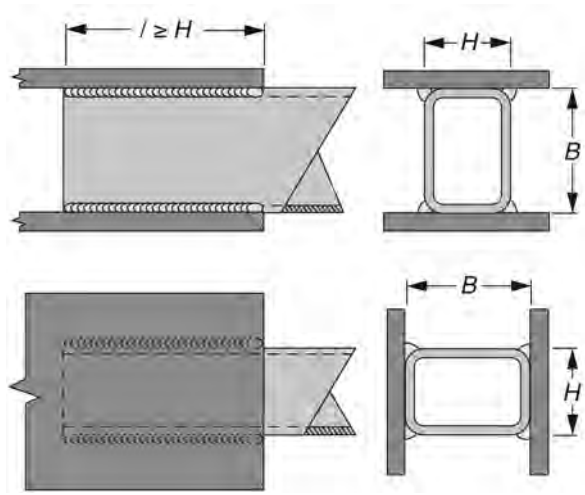

Fig. 4-48. Plates connected to the shorter side of an HSS.

greater than in the previous orientation. The same connection lengths, l, of 6 in. (150 mm), 9 in. (225 mm) and 12 in. (300 mm) will be used, with length, l, to height, H, ratios of 1.5:1, 2.25:1 and 3:1, respectively. Note that these are different than in the preceding example. Given these relationships, U is 0.85, 0.90 and 0.925, respectively, for the three conditions considered. The length of the connection has a more dramatic effect with the HSS in this orientation due to the increased eccentricity.

From these two sets of examples, two patterns can be seen: The shear lag factor, U, can be increased (i.e., effects of shear lag can be reduced) by (1) increasing the connection length, l, or (2) reducing the eccentricity, $\bar{x}$. If the connection geometry cannot be changed, then the net area, A_n, can be increased so an acceptable effective area, A_e, is achieved.

4.4 SPECIAL WELDS

4.4.1 Arc Spot Welds (Puddle Welds or Deck Welds)

An arc spot weld is simply defined as "a spot weld made using an arc welding process" (AWS, 2010d). A spot weld is "a weld produced between or upon overlapping members with coalescence initiating and occurring at faying surfaces or proceeding from the outer surface of one member. The weld typically has a round cross section in the plane of the faying surfaces" (AWS, 2010d). Arc spot welds are applied to lap joints, made by melting through the sheet steel on the top and then fusing into the structural steel below. Such welds are often called puddle welds or deck welds.

An arc spot weld differs from a plug weld in that the latter involves welding into a hole (see Section 3.6 of this Guide). Arc spot welds are normally designed to resist shear loads between the members they join. Because arc spot welds depend on melting through the top layer of material, at least one member in the lap joint needs to be relatively thin.

To help contain the weld pool while the weld is being made, a weld washer may be used. When this is the case, the weld washer is placed on the surface of the sheet steel and the puddle weld is made through the hole of the weld washer. When the weld is complete, the weld washer is left in place.

In the structural steel industry, arc spot welds are used to join floor or roof decking to structural steel. This application is discussed in detail in Section 14.13 of this Guide.

4.4.2 Repair Welds

The term *repair weld* does not have a formal definition, and the term can be applied to many types of welds, including welds made to repair defective base metal, repairs to welds to correct for defects, and welds made to repair damaged structures. Repair welds are discussed in detail in Sections 14.8, 15.8 and 15.9 of this Guide.

4.4.3 Seal Welds

A seal weld is defined as "any weld designed primarily to provide a specific degree of tightness against leakage" (AWS, 2010d). The purpose of a seal weld may be to contain a fluid—either gaseous or liquid. In the structural field, seal welds are used most often not to prevent leakage out of a container, but to prevent entry of a fluid into a space where some type of harm, often corrosion, is expected to occur. Seal welds may be specified on parts to be galvanized to prohibit pickling acids and/or liquid zinc from entering into a specific region. The special caution required under such conditions is discussed in Section 14.11 of this Guide. For steel designated as AESS that is to be painted, seal welds may be specified to prevent unsightly rust bleeding. Seal welds may be required for some applications where the sealed joint is more conducive to cleanup than would be an exposed joint; food processing facilities are one such example.

A characteristic common to all of the aforementioned examples of seal welds is that none of them are placed for traditional strength-related reasons. For this reason, caution should be exhibited when seal welds are specified. In some cases, the application of a seal weld may result in a conflict of specification or code requirements, or violate what is typically deemed good practice. For example, weld termination requirements may be violated by a requirement to apply seal welds (see Section 4.2.7 of this Guide), and small seal welds may violate minimum fillet weld size requirements (see Section 3.5.1 of this Guide). Seal welds may perform structural functions that were unintended, resulting in undesirable load paths. Seal welds may affect inspection practices, particularly the interpretation of ultrasonic testing results.

Perhaps the most damaging potential problem associated with seal welds is that they may be treated in a casual manner by those responsible for making them, resulting in weld quality problems. Seal welds should be made to the same quality standards as production welds. When seal welds are required, the engineer and the contractor should work closely together to avoid possible problems (Miller, 1998b).

4.4.4 Tack Welds

A tack weld is defined as "a weld made to hold the parts of a weldment in proper alignment until the final welds are made" (AWS, 2010d). This definition does not require that tack welds be small or intermittent; tack welds may be large or continuous. Tack welds are defined in terms of their function: they are made to hold the parts of a weldment in proper alignment until the final welds are made. Tack welds are not the same as temporary welds, which are separately discussed in Section 4.4.5 of this Guide.

Tack welds may be placed in the weld joint or may be external to the joint. Tack welds in the weld joint may be totally remelted by subsequent welds; in other cases, the tack weld remains behind and becomes part of the final weld. Tack

welds outside the joint may remain in place under some conditions, and require removal in other situations. These tack welding issues are discussed in the subsequent subsections.

Strength of Tack Welds

A tack weld must be sufficiently strong to resist the loads that will be transmitted through the tack weld during handling, preheating and welding of the component or structure. Some weldments have individual components that are massive, and the mass (weight) of such parts may be transferred through tack welds while the weldment is handled during fabrication. Careful sizing of tack welds that are used for this purpose is essential. Tack welds are often required to hold parts in alignment while assemblies are being preheated for final welding. Thermal expansion and the corresponding strains and resultant stresses may necessitate tack welds of significant strength.

The strength of tack welds, like other welds, is proportional to the throat size and the length. Thus, a tack weld may be made stronger by making it with a larger throat or longer length, or both. A good practice is to make tack welds that are at least 2 in. (50 mm) long, or four times the thickness of the thicker part, whichever is greater (Bailey et al., 1973).

Tack Welds in Welded Joints

Tack welds can be placed in a joint that will subsequently receive a final weld. In some cases, the subsequent weld fuses to the tack weld, making the tack weld part of the final weld; these may be called incorporated tack welds. In other cases, the subsequent weld may totally remelt the tack weld, incorporating the whole tack weld into the melted metal associated with the subsequent weld; these are frequently called remelted tack welds. Both incorporated tack welds and remelted tack welds are placed in the weld joint, and AWS D1.1 handles these two types of tack welds differently. AWS D1.1, clause 5.17.4(1), requires that tack welds must be cleaned of slag before subsequent welds are made.

Incorporated Tack Welds

Incorporated tack welds should be treated like the root pass of a final weld, including being made in accordance with an applicable WPS and meeting standard workmanship requirements because they become part of the final weld. The WPS should list the required preheat, filler metals, WPS parameters and other variables, just as are required for root passes and fill passes. Incorporated tack welds should be made of a size and with a heat input level that will ensure good fusion and a moderate cooling rate. These welds should meet the minimum size requirements that would be imposed on any final weld.

The configuration of tack welds that will be incorporated into final welds must be conducive to good fusion with the subsequent weld pass. Any incomplete fusion at the start of the tack weld will become an incomplete fusion indication in the final weld. When the final weld transitions from the weld root to the tack weld, fusion problems can occur. The ends of tack welds may be ground to minimize quality problems at these locations.

Large, intermittent tack welds may require that the unwelded space between the tack welds be welded before the subsequent weld layers are made. Welding over large, intermittent tack welds may disrupt the arc or affect the appearance of the subsequent final weld. The ends of the tack weld may be points where fusion into the weld root is difficult to achieve. Thus, the acceptable geometry of the tack weld depends on the ability of the final weld procedure to properly incorporate the tack weld into the final weld. For this reason, AWS D1.1, clause 5.17.4(2), requires multi-pass tack welds to have cascaded ends.

Remelted Tack Welds

The basic concept behind remelted tack welds is that the subsequent weld passes will effectively eliminate all evidence that the tack weld ever existed. For tack welds that will be remelted by subsequent submerged arc welding (SAW), AWS D1.1, clause 5.17.4(1), does not require preheating.

When the intent is to remelt the tack weld, it should have a geometry that is conducive to remelting. Relatively small tack welds are more readily remelted. To gain the required joint strength with tack welds that will be remelted, it is best to make small welds that are longer in length. Not only will this encourage remelting of the tack weld, it also minimizes the tendency to disrupt the surface appearance of the final weld.

Tack Welds Outside Joints

Tack welds outside the weld joint include those used to attach steel backing to the joint. When tack welds are not placed in the weld joint, the same criteria that would apply to a final weld should be applied to the tack welds. Such tack welds should be made with materials, procedures, techniques and quality levels that would be acceptable for final welds.

Tack welds outside the weld joint fit into two categories—permanent and removed. In general, for statically loaded structures, tack welds are permitted to remain in place. For tack welds on quenched and tempered steel with a specified minimum yield strength greater than 70 ksi (485 MPa), AWS D1.1, clause 5.17.2(2), stipulates that tack welds outside the final weld joint are permitted only when approved by the engineer. For cyclically loaded applications, AWS D1.1, clause 5.17.2(1), stipulates that tack welds outside the final weld joint are not permitted in tension zones. For seismic applications, tack welds are, in general, required to be placed in the weld joint, with a few exceptions given in AWS D1.8,

clauses 6.12 and 6.16. When tack welds are made outside the weld joint, and when this condition is unacceptable, the tack welds are normally removed by grinding.

Tack Weld Quality

Tack welds are required to be made to the same quality requirements as the final welds, with a few exceptions that will be discussed. According to AWS D1.1, clause 5.17.1, tack welds are to be made by qualified personnel following a WPS. Welds that are not incorporated into final welds are required to meet the same quality requirements as final welds according to AWS D1.1, clause 5.17.1(2).

Welding Process and Filler Metals for Tack Welding

Tack welds may be made with any welding process that is capable of meeting the requirements of AWS D1.1. shielded metal arc welding (SMAW) is often used because of its flexibility. Gas metal arc welding (GMAW) is also popular for tack welding because it does not have a slag covering that requires removal before subsequent welding. Tack welds are often made with the same welding process as the final welds, but this is not a requirement.

AWS D1.1, clause 5.17.4(1), requires that filler metals used for tack welding meet the same property requirements of final welds. If the final welds are required to have fracture toughness, filler metals with fracture toughness must be used for tack welding according to AWS D1.1, clause 5.17.4(3). If self-shielded flux-cored arc welding (FCAW-S) is used for tack welding and another welding process for the final weld, or vice versa, and when welds are required to have fracture toughness, the compatibility of the various processes should be investigated (see Section 2.3.10 of this Guide).

4.4.5 Temporary Welds

A temporary weld is "a weld made to attach a piece or pieces to a weldment for temporary use in handling, shipping or working on the weldment" (AWS, 2010d). The term *temporary* implies that these welds have a limited life. Thus, the weld that joins a lifting lug onto a weldment could be either a permanent weld (if the lug is to remain in place for future handling of the weldment) or a temporary weld (if the lug is to be removed after handling the weldment). In these two situations, the welds may be otherwise identical, but they are identified by different names. AWS D1.1, clause 5.17, uses the term *construction aid welds* in a way that is analogous to temporary welds. Strongbacks, braces and other devices to temporarily hold steel in place may be attached to the structural steel with construction aid welds.

Perhaps the most problematic aspect of temporary welds is that they might be made by individuals with limited understanding of the potential effect of such welds. Temporary welds may be used to attach lugs for handling and shipping steel, for temporary bracing, for installing perimeter fall protection, and other temporary functions. While these temporary welds may be necessary, they must be made with proper techniques and quality. Temporary welds and construction aid welds are to be made to the same quality requirements as the final welds. AWS D1.1, clause 5.17.1, requires that such welds are to be made by qualified personnel following a WPS. Temporary welds and construction aid welds are required to meet the same quality requirements as final welds according to AWS D1.1, clause 5.17.1(2).

AWS D1.1 also stipulates limitations on construction aid welds based on the type of loading. In general, for statically loaded structures, construction aid welds are permitted to remain in place. AWS D1.1 clause, 5.17.2(2), stipulates that construction aid welds on quenched and tempered steel with a specified minimum yield strength greater than 70 ksi (485 MPa) are permitted only when approved by the engineer. For cyclically loaded applications, AWS D1.1, clause 5.17.2(1), prohibits construction aid welds outside the final weld joint in tension zones.

4.4.6 Welds Made with Different Processes (Intermix)

For the carbon and low-alloy steels used in building construction, weld metals from various filler metals and processes can be freely intermixed in a single joint, with one noteworthy exception and a few general precautions. Such intermixing may result from the use of one filler metal or process for tacking, another for the root passes, and yet another for the fill passes. Furthermore, should such welds require repair, yet another filler metal or process may be added to the mix. Within the category of carbon and low-alloy steels, such intermixing of processes and filler metals is acceptable because all involve carbon-manganese-silicon metallurgical systems. The notable exception is the use of FCAW-S, which relies on a different metallurgical system to obtain the required properties. Some FCAW-S weld deposits, but not all, may combine with other weld deposits, resulting in a final weld with decreased notch toughness properties. Other properties, such as yield and tensile strength, and elongation, are insignificantly affected. This phenomenon is discussed in Section 2.3 of this Guide.

A few precautions are also in order when intermixing of different weld processes is involved, although such concerns are generally contractor-related workmanship and quality issues. Under some conditions, a slight difference in the slag systems of various electrodes may cause some slag removal difficulties when one filler metal is intermixed with another; in other cases, porosity may result. Such difficulties, however, are typically resolved easily, and concerns about these issues are addressed in AWS D1.1.

4.4.7 Penetration of Fillet Welds

A flat-faced or convex-faced, equal-legged fillet weld in a 90° T-joint has a theoretical throat dimension of 0.707w, where w is the leg size as shown in Figure 4-49(a). This assumes that fusion is achieved to the root of the joint but the weld does not penetrate beyond the root. When the welding process and procedure achieve a depth of penetration beyond the root, the effective throat dimension is increased for fillet welds with equal leg sizes as shown in Figure 4-49(b). The effective throat dimension, t_{eff}, is then equal to the theoretical throat, t_{th}, plus some additional value due to penetration. If penetration beyond the root is achieved, the leg size can be reduced and the same weld strength can be achieved. This reduces the required quantity of filler metal and, if the penetration fillet weld can be made at the same or higher travel speeds, welding costs can be reduced.

AISC *Specification* Section J2.2a states that "an increase in effective throat is permitted if consistent penetration beyond the root of the diagrammatic weld is demonstrated by tests using the production process and procedure variables." The increase is permitted, regardless of process, providing consistent penetration can be demonstrated. Two cautions are offered with respect to this practice. First, the ability to obtain this penetration must be repeatable. With fillet welding, root penetration depends on many factors, including the welding amperage, travel speed, electrode diameter, electrode orientation with respect to the joint, the thickness of the material being welded, and the fillet weld size. For operations where such variables are controlled, penetration can be consistently achieved. However, when these variables are not properly controlled, the penetration will be inconsistent as well. Secondly, the role of the base metal composition and the potential for centerline cracking due to undesirable base metal compositions should be considered. Welding procedures that result in deep penetration introduce more base metal into the weld metal. Furthermore, improper width-to-depth ratios can cause centerline cracking, and deep penetration encourages these undesirable profiles (see Section 6.3.1 of this Guide).

The AISC *Specification* does not prescribe the nature of the tests to be performed to demonstrate the penetration capability and neither does AWS D1.1. Weld samples can be cross sectioned, polished and etched to verify penetration. The more difficult task is to determine how many samples are necessary to represent the range of production variables that might be involved. On one end of the spectrum, it should be obvious that a change in amperage of 2 amps does not

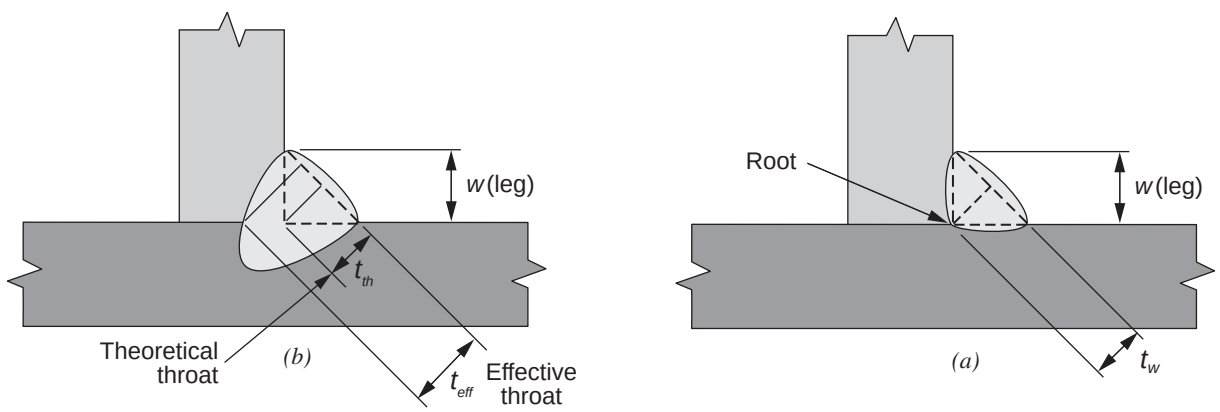

Fig. 4-49. Fillet weld throat sizes.

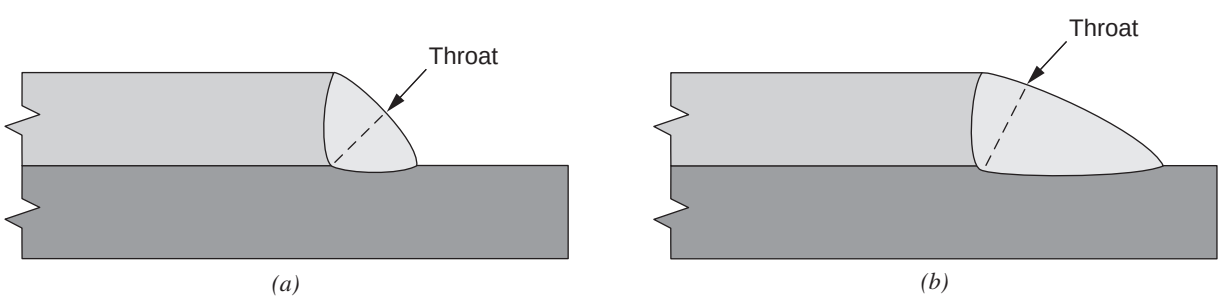

Fig. 4-50. Unequal-legged fillet welds.

require a test to validate the penetration. On the other hand, a change of 200 amps would certainly change penetration characteristics. Fortunately, the most common application of penetration-type fillet welds for structural applications involves automated or robotically welded parts that involve common configurations and well-controlled welding parameters. Samples of parts made on these machines can be destructively tested to confirm penetration.

4.4.8 Unequal-Legged Fillet Welds

Most fillet welds are designed to be equal legged, that is, each leg is detailed to be of the same size. By definition, the fillet weld throat size is the least dimension from the root to the hypotenuse of the largest triangle that can be inscribed in the cross section. When equal-legged fillets are placed on surfaces that meet at a 90° intersection, the throat is 70% of the leg size and occurs on a 45° plane off of the surfaces on which the weld is placed. Occasionally, and particularly when welds are placed on edges, welds with larger throat dimensions may be required, and yet the one weld leg cannot be increased beyond the thickness of the material as shown in Figure 4-50(a). If more available strength is needed, unequal-legged fillets can be used.

When one leg is made twice as long as the other leg, the strength of the fillet weld can be increased as shown in Figure 4-50(b). The resultant weld throat is 89% of the smaller leg size (as compared to 70.7% for an equal-legged fillet), and 26% strength increase is achieved. However, this approach is not economical when the option of a larger equal-legged fillet is possible, as is the case in the T-joint shown in Figure 4-51. In this case, as illustrated Figure 4-51(a) on the right side, the horizontal leg has been made twice as large as the vertical leg, resulting in a 26% increase in strength, but also requires 100% more weld metal. An equal-legged fillet with the same weld throat, as shown in Figure 4-51(b) on the right side, requires only 58% more metal.

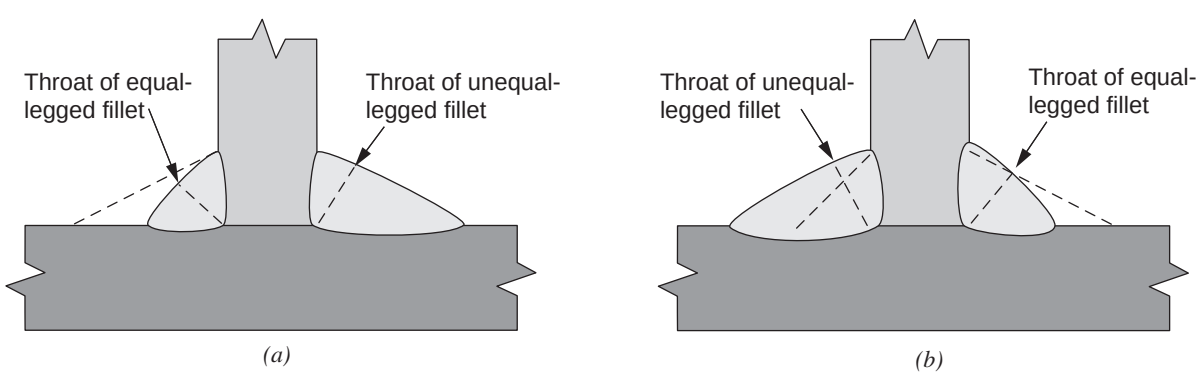

Fig. 4-51. Various throats of unequal-legged fillet welds.

Structural supports for Pritzker Pavilion in Millennium Park, Chicago, Illinois.

Chapter 5
Metallurgical Issues

5.1 INTRODUCTION

Many metallurgical issues are associated with steel construction. This chapter will focus on the welding-related issues associated with the various steels that are commonly used in structural applications. The topics of welding of steels that have been used in the past, and miscellaneous materials that may be welded upon as part of a steel construction project, will also be addressed.

From a welding perspective, the steel that is welded upon is known as base metal and that term will be used in this chapter.

5.2 STEEL—PROPERTIES OF INTEREST

The properties of steel that affect welded connections can be placed into five broad categories: mechanical properties, chemical composition, physical dimensions, areas of anisotropic properties, and the method by which the steel was processed. To ensure commercial steels are suitable for construction purposes, limits on most of these properties and production methods are specified in ASTM and other standards. The AISC *Specification* (AISC, 2016d) lists the steels that have appropriate properties for structural purposes while AWS addresses welding-related issues for the same steels.

5.2.1 Mechanical Properties

The primary mechanical properties of interest to the structural engineer include yield and tensile strength, ductility, and fracture toughness. The modulus of elasticity is also important but, because it is a constant for steel and weld metal, it does not need to be discussed. Ductility, typically measured in terms of elongation or reduction in area (RA), is an important property that is not qualitatively used in design. Fracture toughness provides resistance to brittle fracture. In terms of welded connections, fracture toughness gives the welded connection the ability to tolerate weld imperfections when loaded in tension, whether by the residual stresses from welding or due to service loads.

For steels used in building and bridge construction, the minimum acceptable yield and tensile strength are usually specified along with a minimum level of ductility as measured by elongation. Some steel specifications will also specify an upper limit on the yield strength, an upper limit on the tensile strength, and perhaps a yield-to-tensile strength ratio. Fracture toughness is generally an optional requirement typically measured in terms of CVN toughness, although it is required for some steel classifications.

From a welding perspective, the specified minimum yield strength and tensile strength of the steel being joined are important for filler metal selection; the type of weld that will be made and the direction of loading on the weld must also be considered when selecting the filler metal. When the specified minimum tensile strength of deposited weld metal made with a given filler metal under specific test conditions is compared to the specified minimum tensile strength of the base metal, the relationship may be considered as matching, undermatching or overmatching. These topics are discussed in Section 3.11 of this Guide.

For welded construction, the ductility of steel is important because this property enables the steel to deform to accommodate the shrinkage strains that will naturally occur as the weld metal and hot surrounding base metal cools and shrinks. Additionally, it is the ductility of the steel that redistributes uneven loads not accounted for in design. The measurement of ductility in an unrestrained, uniaxial tensile specimen can be misleading, however. Elongation measurements of 20% or more are measured in specimens that are free to locally deform (necking), and such measurements include the behavior of the material after the load-carrying capacity in the specimen has begun to diminish due to the reduction in cross section. This extensive ductility cannot be depended upon in design, nor will it always be experienced in the actual structure, because multi-directional tensile stresses reduce the available shear stresses that are essential for ductility (Blodgett, 1993, 1995; Barsom and Rolfe, 1999; Gensamer, 1941). For these reasons, highly restrained welded connections made with ductile steel and ductile weld metal may crack instead of yield (see Section 14.5 of this Guide). Nevertheless, ductility permits the steel to strain without fracture, whether such straining is due to the shrinkage of welds or applied loads.

5.2.2 Chemical Composition

Steel specifications place limits on the permissible chemical composition of the steel; it is the composition that plays a critical role in determining the ease with which base metals can be welded. Steel specifications have maximum compositional limits imposed on certain elements when excessive quantities can cause problems. For example, maximum limits usually are placed on sulfur and phosphorous because excessive quantities can adversely affect the properties of the steel and may lead to weld cracking. Specifications may impose specified minimum levels for certain alloys because very low levels of some elements can cause other problems.

Some alloys are specified with both minimum and maximum levels, as either extreme can be problematic.

Steels may also contain unspecified element(s) which are defined as "an element not controlled to a specified minimum, maximum, or range, in accordance with the requirements of the applicable product specification" (ASTM, 2017a). Steels with unspecified elements can be a challenge when welding is involved. Preheat levels, for example, can be predicted based on steel compositions, which are often taken from mill test reports. However, if unspecified elements are involved, there is no requirement to report that ingredient. An all too common practice is to assume that if an element is unlisted, that element is not present in the steel, which is not true. If the element is unspecified, and if preheat levels are predicted based on the false assumption that the element does not exist in the steel, and yet it does, nonconservative preheat predictions may result.

Carbon is the most important ingredient in steel, and maximum limits on the carbon content are typically specified. It is usually unnecessary to specify minimum levels of carbon because the specified minimum yield and tensile strength requirements dictate that some carbon must be present. High levels of carbon can cause cracking during welding, and thus, the upper limits are imposed on steels intended to be welded.

Weldability is a term that is used to describe the relative ease with which a material can be welded (ASTM, 2016). *Weldability* should not be confused with the term *weldable*; many materials are weldable (i.e., they can be welded), but not all weldable materials have good weldability. Materials with good weldability can be successfully welded without unusual precautions. Conversely, when materials require special techniques to be successfully welded, such as careful control of preheat and interpass temperature, they are said to have poor weldability. Mathematical models have been created to evaluate weldability based on empirical data. Weldability is inversely related to hardenability—the greater the hardenability, the lesser the weldability. One such model determines the carbon equivalency (CE); this and other such models are discussed in Section 6.3.2 of this Guide.

The chemical composition of the steel will determine both the weldability of the steel and the sensitivity of the steel to various welding-induced cracking phenomena. Additionally, some of the base metal is melted and combined with the filler metal when the weld metal is formed. The steel may add alloys not present in the filler metal to the weld or increase the level of such alloys—this is called alloy pickup. Conversely, additions of the base metal to the weld metal may reduce the level of alloy present in the weld metal—this is called dilution. The addition of base metal to the weld metal, regardless of whether pickup or dilution is involved, is called admixture, and the level of admixture will determine how significant any difference in weld metal chemistry will be.

5.2.3 Physical Dimensions

Although not a metallurgical issue per se, steel material specifications also include limits on various physical tolerances that may affect welded connection details. Rolled wide-flange sections, for example, have tolerances on the overall depth of the section and the allowable out-of-square (toed in or out) dimension for flanges, controlled by ASTM A6 (ASTM, 2016). Allowance must be made for variations permitted by the specifications and certain weld details are helpful in this regard. For example, in a beam-to-column moment connection, flange tilt of the column will create a variable gap along the length of the joint. A groove weld detail that utilizes steel backing can help accommodate these variations.

5.2.4 Areas of Anisotropic Properties

Steel is generally considered to be an isotropic material, with similar properties in all directions. Steel is isotropic in terms of yield and tensile strength, although small differences do exist. The modulus of elasticity is also generally isotropic. However, in terms of ductility and fracture toughness, steel may be very anisotropic. Steel composition is also generally viewed as homogeneous, but variations may exist across the cross section and along the length of a member.

The best strength, ductility and fracture toughness usually occurs in the direction of rolling. Fortunately, the greatest demand on members is typically in the long axis direction of products. Unfortunately, welded connections often intersect these long members along orthogonal planes. The shrinkage stresses of welds may strain the materials in a direction that is perpendicular to the direction of rolling where the ductility may be inferior. In service, material connected by welding may introduce loads that pass through the steel in a direction normal to the surface of the steel. Thus, the through-thickness properties of steel are more significant for welded construction.

The anisotropic nature of ductility and the reduced through-thickness ductility in particular need to be considered in the detailing of welded connections. Lamellar tearing, discussed in Section 6.4 of this Guide, is caused in part by the reduced through-thickness ductility that may be encountered in some steel. It should be remembered that the typical mill test ductility measurement will be in the longitudinal direction, so any reduced properties in the through-thickness direction will not be reported unless special tests are ordered.

When steel is processed into coils, the strength may vary across the width of the coil as well as through the thickness of the coil due to the different cooling rates experienced after the coil is formed. When HSS members are formed from the coil stock, any variations in the coiled material are introduced into the tubular member. The corners of square and rectangular HSS are typically cold formed, resulting in work

hardening of the corners. This, in turn, increases the strength but reduces the ductility and fracture toughness. For many tubular connections, welds are placed on the corners where the mechanical properties are likely different than along the flat sides.

Many hot-rolled structural shapes are straightened in the mill by a method called rotary straightening. The process involves the deliberate bending and restraightening of the shape after it has cooled. This form of cold working may increase the strength of the steel but also may reduce the ductility and fracture toughness. The affected region on wide-flange shapes is a relatively small portion of the web that is called the *k*-area. The *k* dimension is the distance from the outer surface of the flange to the point of tangency of the web-to-flange radius to the web. As shown in Figure 5-1, the *k*-area is "the region of the web that extends from the tangent point of the web and the flange-web fillet (AISC *k* dimension) a distance 1½ in. (38 mm) into the web beyond the *k* dimension" (AISC, 2016d). When welding is performed in this area, such as when web doublers or continuity plates are added, cracking may occur. Sections 4.3.3 and 4.3.4 of this Guide discuss detailing for this condition. The AISC *Specification* does not prohibit welding in this area, but Table N5.4-3 does mandate inspection after welding.

The web/flange interface of heavy rolled shapes is another region of localized nonhomogeneity. The region may have an enriched carbon content, may experience less rolling at the mill, and typically cools slower than the rest of the shape. As a result, this region may experience less fracture toughness than the rest of the section, necessitating special material specifications, detailing and fabrication. See Section 14.4 of this Guide.

5.2.5 Steel Production Method

Producing mills use a variety of finishing methods to produce steel. The methods include hot rolled, cold rolled, quenched and tempered, thermal-mechanical controlled processing, as well as other methods. Some of these methods are described in Section 5.4 of this Guide. The method of steel production directly affects the microstructure of the steel and the resultant mechanical properties of the steel. The finishing method may affect the properties of the heat affected zone.

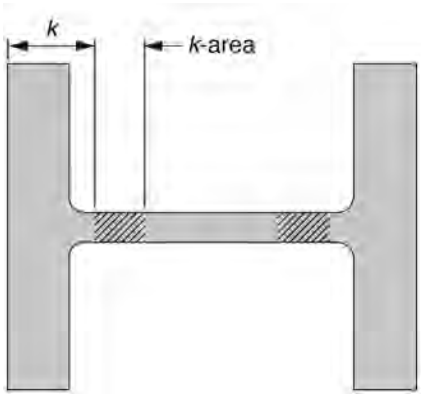

Fig. 5-1. Representative k*-area of a wide-flange shape.*

5.3 DESCRIPTIONS OF STEEL GROUPS

5.3.1 AWS D1.1 Prequalified Steels

AWS D1.1, Table 3.1, lists prequalified steel grades—those materials that may be used with prequalified welding procedure specifications (WPS) without WPS qualification testing. These are steel grades with a history of satisfactory service and with known, good weldability. Newer steels are constantly being added to this list. Being new, they may not have the same historic record of successful usage, but they have nevertheless undergone testing and analysis before being included. It is generally recommended that prequalified steel grades be specified when welding is anticipated, although this may not always be possible or practical, as will be explained.

All of the prequalified steels have a specified minimum yield strength of 90 ksi (620 MPa) or less. This is consistent with the AWS D1.1 philosophy that prequalified welding procedure specifications are limited to steels with a specified minimum yield strength of 90 ksi (620 MPa) or less. All of the listed steel grades have both mechanical property controls and compositional limits that are appropriate for the welding processes and conditions specified within the code.

5.3.2 AWS D1.1 Approved Steels

Contained in AWS D1.1, Table 4.9, is a list of code-approved base metals, along with a listing of matching strength filler metals and preheat values. Two types of steels are listed in Table 4.9—those with a minimum specified tensile strength that exceeds 90 ksi (620 MPa), and therefore exceed the limit for use with prequalified WPS, and newer steels that do not yet have a sufficient history of satisfactory usage for the D1 committee to comfortably place into Table 3.1.

The WPS used to join these code-approved steels will require qualification testing. Once the WPS is successfully qualified, the test may be used to support welding other steel combinations in accordance with AWS D1.1, Table 4.8. Avoiding WPS qualification testing by specifying prequalified steel grades is always desirable, but the use of Table 4.9 steels is advisable for the higher strength steels where prequalified WPS are unavailable.

5.3.3 AWS D1.1 Unlisted Steels

Steel grades not listed in Table 3.1 or Table 4.9 of AWS D1.1 are known as unlisted steels. A steel grade may be unlisted for several reasons. The steel may have poor weldability and, as a result, was deliberately omitted. Alternatively, the

steel grade may be new and may have good weldability but simply has not yet been incorporated into the code. Some steel grades are excluded because their mechanical properties are not sufficiently defined. This is the case for the AISI/SAE grades of steels, wherein only chemical compositions are specified. Finally, AWS D1.1 only recognizes steels classified to U.S. standards, such as the American Society for Testing and Materials (ASTM) and the American Petroleum Institute (API) standards. Steels classified by other standards may have excellent properties, although they have not been incorporated into AWS D1.1 for the aforementioned reason.

WPS for welding on unlisted steels are required to be qualified by test, except as permitted for a specialized condition (to be discussed). Because the category of unlisted steels is so broad, the applicability of the qualification test is restricted to the same unlisted steel that was used in the test as stipulated in AWS D1.1, Table 4.8.

There is a special situation in which unlisted steels may be used with prequalified WPS. AWS D1.1, clause 3.4, permits the use of prequalified WPS for welding on unlisted steels when all of the following conditions are met: The steel is used for an auxiliary attachment; the use is approved by the engineer; the unlisted steel has a chemical composition that falls within the limits of one of the prequalified steel grades listed in AWS D1.1, Table 3.1; and the preheat requirements for prequalified WPS are followed. With this exception, the WPS must be qualified when unlisted steels are used (also see Sections 5.3.4 and 16.9.1 of this Guide).

Passing a WPS qualification test satisfies the AWS D1.1 requirements for welding on an unlisted steel, but the WPS qualification tests prescribed in AWS D1.1, clause 4, are not weldability tests per se. The degree of restraint associated with WPS qualification test plates is usually not sufficient to replicate actual fabrication conditions. The WPS qualification tests provide good information on mechanical properties and on the suitability of the chosen welding parameters to deposit quality weld metal in a given joint geometry. There are unfortunate examples where a WPS was successfully qualified in accordance with AWS D1.1, clause 4, and yet in production, welding problems such as cracking were encountered.

A number of true weldability tests have been developed to evaluate the sensitivity of the weld or the heat affected zone (HAZ) to cracking, each with advantages and limitations. Some tests are better at detecting cracking in the weld itself while others are better at detecting cracking in the HAZ. Commonly used tests include the Lehigh restraint test, the Tekken test, the controlled thermal severity (CTS) test, and the gapped-bead-on-plate (G-BOP) test (ASM, 1997). The use of these true weldability tests provides better data regarding the weldability of steels than is provided with WPS qualification tests.

When unlisted steels are used, it is prudent to investigate other data to support the use of the material beyond just WPS qualification tests. Producing mills often have such data, and the successful usage on similar projects provides good support for the use of the material. When such data does not exist, the use of specialized weldability tests may be advisable.

5.3.4 AISC *Specification* Treatment of Unidentified Steels

AISC *Specification* Section A3.1b permits the use of unidentified steels for "…members or details whose failure will not reduce the strength of the structure, either locally or overall." The use of such steel under such conditions requires the approval of the engineer. A User Note states that "Unidentified steel may be used for details where the precise mechanical properties and weldability are not of concern. These are commonly curb plates, shims and other similar pieces." In order to comply with both the AISC *Specification* and AWS D1.1, either the unidentified steel must comply with the AWS requirements for unlisted materials (see AWS D1.1, clause 3.4, and Section 5.3.3 of this Guide), or the WPS must be qualified by test. The latitude offered by AWS D1.1, clause 3.4, is important when unidentified steels are encountered.

5.4 WELDING REQUIREMENTS FOR SPECIFIC STEELS

5.4.1 Weathering Steels

Weathering steels are able to resist atmospheric corrosion, precluding the need for paint or other coating systems. Included in this category of steels are ASTM A588; A709 Grade 50W; HPS 50W, HPS 70W, and HPS 100W; A606 (sheet steel); A847 (cold-formed tubing); A514 (ASTM, 2016); and A852 (ASTM, 2007), as well as the first weathering steel A242 (ASTM, 2013). Each of these steels has specific fabrication requirements, but the general provisions applicable to this group of weathering steels will be reviewed. Weathering steels all contain sufficient alloy content to offer resistance to atmospheric corrosion. Popular for bridge construction, weathering steels have also been used for buildings, amphitheaters, light poles, transmission towers and other structures.

A variety of chemical compositions can be used to achieve the weathering characteristics. ASTM G101 *Standard Guide for Estimating the Atmospheric Corrosion Resistance of Low Alloy Steels* (ASTM, 2016) contains a chemistry-based equation that is used to estimate the atmospheric corrosion resistance index (I), where higher values provide more resistance. Most (but not all) of the weathering steels listed in the previous paragraph are required to have an index value of 6.0 or higher. The empirically derived index formula applies to steels within the range of the original test materials used to develop the relationship.

When welding on weathering steels, filler metals must be selected to ensure the weld has atmospheric corrosion resistance equal to that of the base metal. Several approaches may be taken. First, all welds on weathering steel structures may be made with alloy filler metals that deposit weld metal with a sufficient alloy content so that the deposit has a weathering composition. While a variety of alloys may be used, a common choice is to use nickel-bearing filler metals, typically with a nominal nickel content of 1% or greater. Filler metals prequalified for weathering steels are listed in AWS D1.1, Table 3.4.

A second approach involves the use of carbon steel filler metals for single-pass welds of a restricted size. During welding, some of the weathering steel base metal melts and becomes part of the weld deposit (alloy pickup). Smaller single-pass fillet welds, for example, experience sufficient admixture to introduce enough alloy into the resulting weld to have weathering characteristics. The level of admixture depends in part on the welding process and the size of the weld that will be made. AWS D1.1 prescribes the conditions by maximum weld size and by process under which this approach may be used (see Section 3.5.2 of this Guide). It may allow the contractor to employ filler metals that are used for standard carbon steel applications. The carbon steel materials are less expensive to purchase; more importantly, it is not necessary to reconfigure the welding equipment with different filler metals as jobs of different steels flow through a shop.

A third option is to make the majority of the weld with carbon steel electrodes then overlay or cap the weld with welds made with alloy electrodes. This option would only be employed for multiple-pass welds and is usually restricted to groove weld applications. When this is done, the capping should include not only the face of the weld, but the ends of the weld too; all portions of the weld that will be exposed to the atmosphere should be capped with alloyed weld metal. The idea of overlaying welds was more logical in the days where shielded metal arc welding (SMAW) was commonly used; switching from a carbon steel electrode to an alloyed electrode was an easy task. Switching rolls of coiled electrode from a wire feeder is a time consuming proposition and has thus made this option less popular.

On occasion, weathering steels may be specified and yet the structure is still painted. When this is the case, special atmospheric corrosion resistance is not required for the weld, and usually no special filler metal considerations with respect to weld metal composition are required or justified. However, on some projects, weathering steel has been specified and required to be painted as well, in anticipation of poor maintenance in the future (i.e., peeling paint) might change a painted structure into a weathering structure. Under such conditions, welds that meet the requirements for weathering applications are likely appropriate.

The preceding discussion has focused on atmospheric corrosion resistance, but there is a related concern associated with welds on weathering steel, namely color match. The concern is that the rust on the weld be visually similar to that on the steel. The concern of color match seems to have decreased, and except for the initial years of exposure, both steels and welds seem to acquire a similar dark brown appearance with time.

An ongoing question, and one for which little or no known research has been conducted, concerns the required chemical composition for the weld metal used on weathering steel projects. The codified requirements were established based on limited testing and subsequent experiences have demonstrated them to be adequate. It may be tempting to use the ASTM G101 index formula to evaluate weld deposits, but the relationship was developed for steels not welds. The AWS D1.1 requirements for welding on weathering steels have been deemed adequate and are easily achieved; however, they do not constitute a lower bound of suitability.

Other than attention to the chemical composition of the weld metal, weathering steels such as ASTM A588 have good weldability and the welding is very similar to non-weathering steels of similar strengths. Quenched and tempered weathering steels such as ASTM A852 and ASTM A709 HPS 70W may require additional welding controls due to their higher strength and quenched and tempered processing, but not because of the weathering characteristics.

5.4.2 Quenched and Tempered Steels

Some steels gain their properties by quenching and tempering (Q&T). The quenching operation hardens the steel, while the tempering operation increases the fracture toughness and ductility. One of the first popular Q&T steels for structural applications was ASTM A514 (ASTM, 2016), which is a martensitic steel with 90 to 100 ksi (620 to 690 MPa) specified minimum yield strength, depending on the thickness of the material. ASTM A514 can be, and is, successfully welded every day, but it can be problematic when the proper procedures are not followed. This background is provided to explain a common, albeit inaccurate, perception of quenched and tempered steels: They are often assumed to be high strength, martensitic, and hard to weld. As will be seen, for some Q&T steels, none of these characteristics apply.

Table 5-1 summarizes different Q&T steels, their strength properties, and how AWS D1.1 deals with the material. Even though all of these steels are processed similarly, the strength and weldability vary considerably. Because Q&T steels gain their strength by controlled quenching and tempering, the welding process must be controlled to minimize softening or hardening of the heat affected zone (HAZ), as well as to maintain adequate toughness. The degree of control necessary depends on the specific steel involved.

Table 5-1. Quenched and Tempered Steels					
Steel Specification		**Specified Minimum Yield Strength, ksi (MPa)**	**Specified Minimum Tensile Strength, ksi (MPa)**	**Processing Method**	**D1.1 Coverage**
API 2Y	**Gr. 42**	42–67 (290–462)	62 (427)	Q&T	Prequalified (AWS Table 3.1)
	Gr. 50	50–75 (345–517)	65 (448)		
	Gr. 60	60–90 (414–621)	75 (517)		
ASTM A709	**HPS 70W**	70 (485) min.	85–110 (585–760)	Q&T	
ASTM A514	**> 2½ in. (65 mm)**	90 (620) min.	100–130 (690–895)	Q&T	Code approved (AWS Table 4.9)
	≤ 2½ in. (65 mm)	100 (690) min.	110–130 (760–895)		

The preheat level must be controlled to both minimum and maximum levels, and heat input must similarly be controlled in terms of minimum and maximum levels. The goal is to control the cooling rate experienced by the HAZ; the preheat must be sufficient to avoid cracking in the weld and HAZ, but excessive preheat may damage the properties of the steel. Accordingly, tables have been developed that give the maximum allowable heat input for different levels of preheat and interpass temperatures. AWS D1.5 (AWS, 2015a) provides a table with preheat ranges and acceptable heat input limits within those ranges that are in turn a function of the thickness of the steel being joined. Welding within a more restrictive envelope of acceptable parameters is different than what is required for welding on most hot-rolled carbon steels and thus can present additional challenges.

Heat shrinking (see Section 14.15 of this Guide) temperature limits are more tightly controlled for Q&T steels, and the use of high heat input welding processes like electroslag welding (ESW) and electrogas welding (EGW) (see Section 2.6 of this Guide) are similarly limited in AWS D1.1. AWS D1.1, clause 2.10.4, prohibits plug and slot welds in quenched and tempered steels with a specified minimum yield strength of 70 ksi (490 MPa).

5.4.3 Quenched and Self-Tempered Steels

Another method of processing steel is quenching and self-tempering (QST), which is a variation of the thermomechanical control process (TMCP) rolling technique. Steel shapes made by this process are quenched in a traditional manner, but the quenching does not cool the entire cross section of the shape. The residual thermal energy in the core of the shape then tempers the quenched outer surfaces without the application of additional thermal energy, hence the term self-tempering.

ASTM A913 (ASTM, 2016) is a QST steel, available in four grades: 50, 60, 65 and 70. The material specification limits the carbon content to lower levels, and requires the steel be under certain carbon equivalent levels. As a result, the steel has good weldability and can be welded with reduced preheat levels. AWS D1.1 permits ASTM A913 Grades 50, 60 and 65 to be welded with a 32°F (0°C) preheat, providing the filler metal complies with a maximum diffusible hydrogen level of 8 ml/100g. Preheat might be required to compensate for restraint and other factors, but the permitted low level of preheat speaks to the good weldability of the material. ASTM A913 Grade 70 steel is prequalified by AWS D1.1 with preheat levels that are typical for other 70 ksi (480 MPa) materials.

Because the higher tensile strengths are gained through quenching and self-tempering, some caution regarding overheating the steel is needed because the steel can be softened. According to ASTM standards, for QST steels the post weld heat treating temperatures should not exceed 1,100°F (600°C).

5.4.4 Multigrade Steels

Some steels are marketed as dual grade, triple grade, or other multigrade variations. Some people view this as somewhat of a cheat on the part of the supplier, but such steels are more restrictive and better defined than steels bearing only one grade designation because multigrade steels must meet all of the requirements of all the listed specifications. Multigrade steels are possible because of the overlap between specification requirements. It is common for a single heat of steel to meet all the requirements of ASTM A36, ASTM A572 Grade 50, and ASTM A992. Techniques and procedures for welding on multigrade steels should be such that all the requirements of the specified steel grade are met. For example, if the specified steel is ASTM A992 and the aforementioned steel is delivered, then all the requirements for welding on ASTM A992 should be met.

5.4.5 Historical (Obsolete) Steels

When welding on an existing structure, it is essential to determine the weldability of the steel. If the steel was successfully welded years ago, the weldability today should be unchanged. However, the steel in structures riveted or bolted

in the past may or may not have acceptable weldability, and this must be known before beginning to weld such steels.

Metal structures made before 1900 may be made of cast iron, wrought iron or structural steel, which began to be used in the 1880s. By 1900, steel had nearly replaced the use of cast and wrought iron as a construction material. During these early years, various producing mills used their own proprietary steel compositions, resulting in significant variations in mechanical properties and compositions. Some of these early steels, even though initially riveted, had good weldability, while others did not (Ricker, 1987).

AISC Design Guide 15, *Rehabilitation and Retrofit* (Brockenbrough and Schuster, 2017), contains helpful information about historic steel specifications, shape properties, and changes that have been made to various construction specifications over the years. Contained in that document is Table 4-1a, which summarizes various historic steel specifications and lists the requirements for yield and tensile strength, which varied over time. Not listed, however, are chemical compositions that are needed when considering weldability. Design Guide 15 assists by providing an understanding of what specifications were in effect at various times.

It is helpful and highly desirable to obtain a representative chemical composition from steels of unknown or questionable weldability. If the composition meets the limits of a current steel grade with good weldability, it will likely have welding characteristics similar to the modern steel. Steels enriched in carbon and hardening alloys will typically require more preheat to be successfully welded. Higher levels of sulfur or phosphorous will signify an increased sensitivity to hot cracking.

Even though a representative chemical composition from the steel is desirable, it is still only an indirect indication of the weldability of the steel. Accordingly, it is advisable to run simple tests on the existing member to ensure that it is weldable. For example, a single-sided fillet weld can be used to join the end of a long, flat bar to an existing member as shown in Figure 5-2(a). After the weld has cooled, an attempt is made to break the flat bar from the existing member by applying force that puts the weld face into tension as shown in Figure 5-2(b). The weld will easily break away when the steel has poor weldability, cracking in the HAZ as shown in Figure 5-3(a), an indication of poor weldability. If it does not break, the bar is pried in the opposite direction, putting the weld root into tension as shown in Figure 5-2(c). The weld will naturally break, and typically does so in the throat as shown in Figure 5-3(b). Fracture in this manner indicates better weldability. If the test fails in the HAZ as shown in Figure 5-3(a), the steel can be rewelded using a higher level of preheat in an attempt to overcome the problems. In this manner, preheat levels can be established even when the chemical composition of the steel is unknown.

Key historic steel specifications are reviewed here with a focus on welding-related issues.

ASTM A7 Specification for Steel for Bridges

Issued initially in 1900, the ASTM A7 (ASTM, 1967) specification was discontinued in 1967. It covered rivet steel, soft steel and medium steel. For the structural steels (soft and medium), the specified minimum yield and tensile strengths varied over the years, but in general, they had yield strengths of around 30 to 35 ksi (205 to 240 MPa) and tensile strengths of 50 to 70 ksi (340 to 480 MPa); specific values can be found in Design Guide 15. The steel was permitted to be made by the open hearth process. Limits were placed on the phosphorous content only, allowing up to 0.06%.

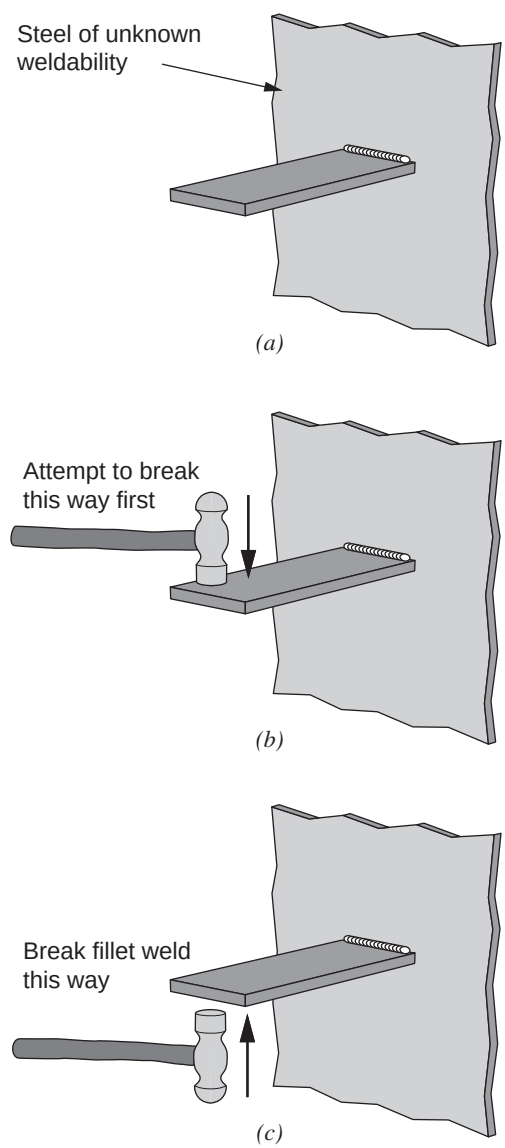

Fig. 5-2. Weldability fillet weld break tests.

In 1939, ASTM A7 and A9 (discussed in subsequent paragraphs) were consolidated into one specification, ASTM A7 (ASTM, 1939), covering structural steel for bridges and buildings. Also during this timeframe, ASTM A141 (ASTM, 1932) was issued covering rivet steel, which was no longer included in ASTM A7.

The weldability of A7 must be evaluated on a case-by-case basis. The ASTM A7 specification was in effect for 67 years and mill practices varied over the years. However, in 1957, the 11th edition of *The Procedure Handbook of Arc Welding* (Lincoln Foundation, 1957) stated "Although specifications are not intended to control carbon content, experiences with the material, as it has been delivered, indicate that the carbon content is within the readily weldable range." Thus, by the late 1950s the general experience with the material being delivered was that the weldability was good.

ASTM A9 Specification for Steel for Buildings

Issued initially in 1900, the ASTM A9 specification was absorbed into the ASTM A7 specification in 1939 and ceased to exist. Initially, it covered rivet steel and medium-strength steel with a specified minimum yield strength of 35 ksi (240 MPa) and tensile strength of 60 to 70 ksi (415 to 480 MPa). In 1901, this was revised, requiring the yield strength to be at least half of the tensile strength. These property requirements were modified slightly over the years (specific values can be found in Design Guide 15). The steel was permitted to be made by either the open hearth or Bessemer process. Limits were placed on the phosphorous content only, allowing up to 0.10% for Bessemer steel and 0.06% for open hearth steel.

The weldability of ASTM A9 must be evaluated on a case-by-case basis. Unlike ASTM A7, which was produced both before and after World War II, when the use of welding greatly increased, the A9 specification was in effect only for the period before the war.

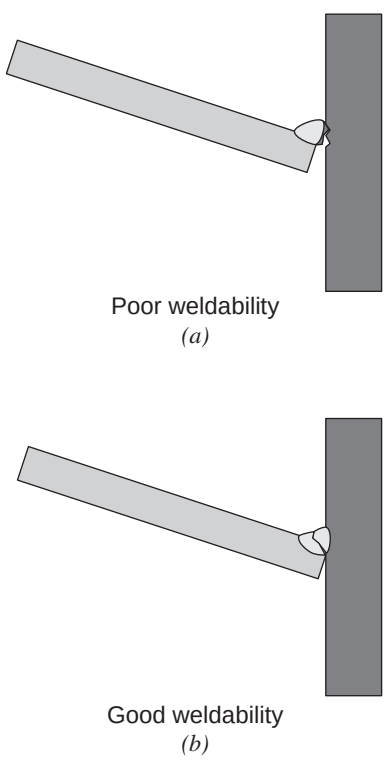

Fig. 5-3. (a) Poor weldability, versus (b) good weldability.

ASTM A373 Standard Specification for Structural Steel for Welding

Issued initially in 1958, ASTM A373 (ASTM, 1958) was the direct predecessor to ASTM A36, which was issued in 1962. ASTM A373 was discontinued in 1965. It contained controls on the chemical composition, including maximum limits of 0.28% carbon, 0.05% sulfur, and 0.04% phosphorous (Garlich, 2000). The steel has a specified minimum yield strength of 32 ksi (220 MPa) and a tensile strength of 58 to 75 ksi (400 to 518 MPa). The weldability of ASTM A373 is generally considered to be good (Ricker, 1987).

ASTM A242 Standard Specification for High-Strength Low-Alloy Structural Steel

Issued initially in 1963, ASTM A242 (ASTM, 1963) was the first weathering steel. From a welding point of view, the challenge with ASTM A242 was the lack of a maximum limit on the phosphorous content. For many years, ASTM A242 was included in AWS D1.1 as a prequalified steel, but with a footnote suggesting that special precautions might be necessary when welding the steel. The weldability of A242 should be investigated with special attention to the phosphorous content. ASTM A242/242M (ASTM, 2013) is no longer listed as a prequalified steel in AWS D1.1.

5.4.6 Cast Iron

Cast iron is a high carbon material that can be easily cast (i.e., poured) into sand molds to create three-dimensional geometric configurations. Architectural embellishments can be added to cast iron castings at little or no cost, and some cast iron building components can be quite ornate. Cast iron was a popular building material prior to 1900. The high carbon content simplifies the casting process, but the resultant material is more brittle and more difficult to weld than structural steels.

Because of its inherent ability to be cast into appealing shapes, when structures containing cast iron members are rehabilitated, it is often desirable to retain the cast iron elements. While cast iron can be welded, it is difficult to weld and the results are inconsistent. Cast iron should not be

welded if the weld is intended to serve a structural function. Cast iron members were nearly always used to resist compression, and cosmetic cracks or portions that have broken off may be repaired by welding using the proper procedures and materials. A variety of welding aids are available to assist in developing procedures for repairing cast iron components.

There are many grades of cast iron with very different properties and weldability. If welding is to be done on cast iron, the specific properties of the casting should be determined and appropriate welding procedures developed, with a special focus on preheat and filler metal selection. Brazing and braze welding are other means by which cast iron components can be repaired.

Cast iron columns can sometimes be retained for architectural purposes by inserting a new steel member inside the column, using the replacement steel to resist all the structural loads. This may satisfy the architect's objectives while providing a reliable structural system composed of modern material.

5.4.7 Wrought Iron

Wrought iron was an important building material prior to 1900 and was used for members subject to tensile loading where cast iron was inappropriate. Wrought iron is composed of nearly pure iron and iron silicate (slag). It offers greater corrosion resistance than steel. Wrought iron is typically weldable, but the wrought iron itself often tears in a manner similar to lamellar tearing (see Section 6.4 of this Guide). Caution should be exercised when relying on such welds to support significant loads.

5.4.8 Steel Castings

Steel castings are formed by pouring molten steel into a mold that is typically made from sand. In the structural field, steel castings are often used to create nodes or member end connectors to which conventional steel shapes can be joined by welding. Steel castings have become popular in architecturally exposed structural steel (AESS) applications. For complex connections where the geometry would cause congestion or weld access issues in conventionally fabricated connections, steel castings may be a practical alternative. For highly loaded connections, steel castings have been used to create strong and stiff nodes while retaining lighter weight and more slender rolled steel elements away from the connection. In fatigue-sensitive connections, steel castings can be used to move the locations of welded joints away from geometric stress raisers, thus improving the fatigue performance of the system.

The casting process permits complex, three-dimensional shapes to be produced, including hollow shapes and configurations that involve different thicknesses of material as shown in Figure 5-4. The part to be cast must be designed to allow for patterning, molding, feeding of the liquid metal during casting, and proper grain growth during solidification. The shape of the casting must satisfy the requirements of the architect (when applicable), the engineer, the foundry, and the fabricator. As is often the case in steel construction, cooperative collaboration between the involved parties is necessary.

By virtue of the steel casting process, steel castings will always exhibit some nonmetallic inclusions and porosity. The casting designer should establish nondestructive testing (NDT) criteria that result in a product capable of safely addressing the structural performance requirements for the application. While modern foundries utilize sophisticated solidification modelling software to predict the internal quality of cast products, the first casting produced to a new geometry (termed the first article) should be closely scrutinized to ensure the part and casting process design result in appropriate quality. In addition to visual inspection, appropriate NDT methods include ultrasonic, magnetic particle

Fig. 5-4. Steel castings designed by CastConnex® support an office building above street level (photograph by Doublespace Photography).

and radiographic testing; radiography is typically reserved for first article components in the structural field.

When defects are discovered in steel castings, they typically are removed by air carbon arc gouging or grinding, repaired by welding, and reinspected to confirm the efficacy of the repair. After weld repairs are made, depending on the extent of welding, the casting may be stress relieved.

Properly designed steel castings are free of shrinkage voids and may be more isotropic than standard rolled steel products. When steel castings are stress relieved or heat treated, the residual stresses may be lower than those in rolled steel products. However, improperly designed castings may have shrinkage voids, significant inclusions, and significant residual stresses in the as-cast form. Quality issues can affect both the weldability of a casting and its ability to perform structurally. A qualified casting supplier is essential to a successful project when steel castings are to be used.

Not to be confused with iron castings (i.e., cast iron), steel castings can have compositions similar to those of structural steel grades. When this is the case, the weldability of the cast steel is essentially identical to that of the rolled steel shape or plate of a similar grade. However, steel castings often have different compositions than rolled structural steel of the same nominal strength level. This is because it is often necessary to alloy the steel to higher levels to achieve the required strengths in the as-cast condition. Depending upon the alloying, the cast material may be more difficult to weld than structural steel grades of similar strength levels.

Steel castings must conform to an ASTM standard intended for structural applications and to provide adequate strength, ductility, weldability and toughness for the intended application as stipulated in AISC *Specification* Section A3.2 (AISC, 2016d). Several ASTM specifications govern steel castings. Commonly specified grades for structural applications include the following:

- ASTM A216 Grades WCA, WCB or WCC (ASTM, 2016)
- ASTM A352 Grades LCA, LCB or LCC (ASTM, 2012)
- ASTM A958 Grade SC8620 Class 80/50 (ASTM, 2016)

ASTM A216 lists three grades, each of which has been used in structural applications. The three grades each have different specified minimum yield strengths, ranging from 30 to 40 ksi (205 to 275 MPa), along with corresponding changes to the chemical requirements. Castings supplied to ASTM A216 are the most readily welded that are also suitable for structural uses, but they have limited strength. A supplementary specification can be applied to control the maximum carbon equivalency for better weldability.

ASTM A352 lists 10 grades; three are commonly used for structural applications. The LCA, LCB and LCC grades are similar to those of ASTM A216, but A352 requires that the cast steel material be capable of delivering specified Charpy V-notch (CVN) toughness. A supplementary specification can be used to control the maximum carbon equivalency for better weldability.

ASTM A958 lists 12 grades; Grade SC8620 Class 80/50 is the most common grade specified for structural uses. The primary benefit of using ASTM A958 Grade SC8620 Class 80/50 is the higher specified minimum yield strength of 50 ksi (345 MPa). However, the strength is gained by the addition of Cr, Mo and Ni; these alloy additions diminish weldability.

AWS D1.1:2015 does not include steel castings in the list of prequalified materials; thus the WPS must be qualified by test. The emphasis on the code year is deliberate, and discussions have been held within the D1 committee that may result in the inclusion of some casting grades in the future. In terms of AWS D1.1:2015, however, qualification testing of WPS with cast steels is required.

One of the challenges associated with the WPS qualification testing is obtaining cast material suitable for the qualification test. The complex geometric configurations that might have justified the use of a steel casting may not provide a configuration suitable for the required qualification tests. It may, therefore, be necessary to have special flat plate-like slabs cast in order to make the WPS qualification test plates. However, there may be a significant difference in thickness of the casting to be used in production and the plate-like slab used for WPS qualification. The differences between production casting and specially made slab-like plates may result in differences in mechanical properties, or the producing foundry may use a different chemical composition or heat treatment in order to attain the required properties on the thicker material as compared to the thinner test plates. Thus, it may be difficult to directly apply the data gained from the WPS qualification test to welding on production castings; special caution is justified when the casting used in the qualification test is of a significantly different chemical composition than that used for the production castings, even though the same casting grade may apply.

While the welding of steel castings is slightly more complex than welding on hot-rolled sections, it is routinely done and enables some architectural expressions or structural performance that would otherwise be impossible. Casting suppliers often have helpful information on welding that can assist in the design of projects utilizing these materials.

5.4.9 Steel Forgings

Steel products that have been forged rather than cast or rolled are made by mechanically deforming the steel at elevated temperatures, allowing for unique shapes to be achieved. The grains in steel forgings may be more directional than with rolled steel. Inclusions in the forging tend

to be aligned in planes and can complicate welding when the weld penetrates into these inclusions. In service, loads may be transferred through the forging in a direction perpendicular to these aligned inclusions and experience tearing with characteristics of lamellar tearing (see Section 6.4 of this Guide). Unlike steel castings, steel forgings typically are free of internal voids but may have internal planar defects instead. Steel forgings with the same chemistry as rolled steels can be welded in a way that is similar to the rolled steel, except that the anisotropic nature of the forging must be considered. Forgings may have compositions that differ significantly from that used for hot-rolled steels of a similar strength. Steel forgings must possess the necessary strength, ductility, weldability and toughness for structural applications as stipulated in AISC *Specification* Section A3.2. It is typically easier to make steel castings than steel forgings when limited quantities of a given geometry are required. As a result, steel castings are more popular than steel forgings in building construction.

5.4.10 Stainless Steels

The term *stainless steel* is applied to a wide array of iron-based materials with a common characteristic of offering resistance to corrosion. Technically, they are defined as materials with a minimum chromium content of 11%. Other alloys are added to impart specific properties and characteristics, including different levels of resistance to various corrosive environments. Various microstructures can be created, which results in different types of stainless steels, such as austenitic, ferritic, martensitic, duplex or precipitation hardened types. The stainless steels most likely to be used in structural projects are austenitic.

A helpful design aid when dealing with stainless steel structures is AISC Design Guide 27, *Structural Stainless Steel*. The Guide is applicable to austenitic, duplex and precipitation hardening stainless steel structural sections with thickness ⅛ in. (3 mm) and greater. Major topics covered are material behavior and selection, cross-section design, member design, connections, and fabrication (Baddoo, 2013).

Most stainless steels are easily welded both to themselves and to carbon steel with the proper procedures. AWS D1.6, *Structural Welding Code—Stainless Steel* (AWS, 2007), provides code requirements for such applications. Selection of filler metals for welding on stainless steels is more complicated than with carbon steel applications, in part due to the need to more closely match the weld deposit chemistry to the base metal composition. When welding stainless steel to carbon steel, the filler metal used is required to have a higher alloy level than the stainless steel base metal. This higher alloy level compensates for the effects of dilution. In service, suitable corrosion protection for the carbon steel must be provided because that side of the joint will have no enhanced corrosion resistance.

The coefficient of thermal expansion of stainless steel is approximately 50% greater than that of carbon steel, and the coefficient of thermal conductivity of stainless steel is about 33% that of carbon steel. The net effect is that welding distortion is a more significant problem with stainless steel as compared to carbon steel. When stainless steel is joined to carbon steel, the differences in thermal expansion need to be considered as well. The greater expansion that will be experienced by the stainless steel may cause in-service distortion of assemblies composed of stainless steel welded to carbon steel.

The fumes released when welding on stainless steels may contain compounds of chromium, including hexavalent chromium and nickel. Regulatory exposure limits for these compounds may necessitate special ventilation requirements. AWS *Safety and Health Fact Sheet No. 4* (AWS, 2013) deals with chromium and nickel in welding fumes and should be consulted when stainless steel is welded (see Chapter 18 of this Guide).

5.4.11 Bolts

Welding on structural bolts is occasionally desirable, even though as a principle, it is generally best to avoid this situation. Applications that may involve welding on bolts include connections that are bolt-to-bolt, bolt-to-nut, or bolt-to-structural steel. Welding nuts to structural steel is discussed in Section 5.4.12 of this Guide. Mechanical solutions often exist to preclude the need for welding on bolts. Two primary concerns exist regarding welding on bolts. First, the weldability of the bolt may be poor and cracking in the weld or in the bolt may occur. Cracking is discussed in Chapter 6 of this Guide. Second, the heat of welding may compromise the strength of the bolt.

The specifications that govern bolts are primarily concerned with controlling the mechanical properties of the bolt and do not necessarily provide the chemical composition controls that would normally be imposed on a steel intended to be welded. The applicable bolt specifications may permit carbon or alloy contents that are higher than desirable for good weldability. These specifications may be wholly acceptable for governing the characteristics necessary when the bolt is used as a mechanical fastener but may have shortcomings when used to predict welding characteristics. The bolt specification may allow alloy contents that are very broad, or not limited, or prescribed at high levels. The permitted level of phosphorus and sulfur may be higher than desirable for welding; high levels of these elements may lead to hot cracking. It is important to note that while the particular bolt specification may allow for high levels of carbon, alloys, sulfur and phosphorous, it does not follow that the actual bolt will have a high level of these elements. Accordingly, in most cases, the composition of the bolt should be determined in order to predict weldability.

ASTM A307 (ASTM, 2016) Grade A and B bolts may be ordered in accordance with supplementary requirement S1, which is intended to ensure good weldability, making these bolts a good choice when welding is anticipated.

Before the weldability of specific bolt grades is considered, the types of applications involving welding to bolts should be reviewed. In some cases, it is desirable to tack weld bolts to structural steel not because the weld will be used to transfer any load, but to hold the bolt in place until it is tensioned. Sometimes nuts are tack welded to the end of anchor rods where the only function of the weld is to keep the nut from spinning off of the rod. In situations such as these, the welds are less critical than when welds are used to transfer loads from the bolt to the surrounding steel.

The AISC *Specification* lists the following grades of bolts: ASTM A307, A354, A449, F3043, F3111 and F3125 (ASTM, 2016). ASTM F3125 is an umbrella standard that incorporates Grades A325, A490, F1852 and F2280, which were previously separate standards. The following paragraphs provide summaries of the characteristics of various bolts in terms of how weldability will likely be affected.

ASTM A307 Standard Specification for Carbon Steel Bolts, Studs, and Threaded Rod, 60,000 psi Tensile Strength

ASTM A307 bolts are available in two grades—A and B. These bolts may be ordered with the supplementary requirement S1, Bolts Suitable for Welding. When S1 is invoked, compositional limits are imposed on carbon, manganese, phosphorus, sulfur and silicon; a maximum carbon equivalent (CE) limit of 0.55% is imposed; and weldability should be good. Unless this supplement has been invoked, however, weldability is uncertain and should be investigated. Grade A (without the supplement S1) can have high sulfur contents that may make welding difficult.

ASTM A354 Standard Specification for Quenched and Tempered Alloy Steel Bolts, Studs, and Other Externally Threaded Fasteners

ASTM A354 bolts are available in two strength grades—BC and BD. Both grades are quenched and tempered. Grade BC has a specified minimum tensile strength of 125 ksi (860 MPa) for diameters of 2½ in. (64 mm) or less and 115 ksi (800 MPa) for larger diameters. Grade BD has a specified minimum tensile strength of 150 ksi (1035 MPa) for diameters of 2½ in. (64 mm) or less and 140 ksi (965 MPa) for larger diameters. Carbon contents may be as high as 0.53%.

ASTM A449 Standard Specification for Hex Cap Screws, Bolts and Studs, Steel, Heat Treated, 120/105/90 ksi Minimum Tensile Strength, General Use

ASTM A449 covers two types of bolts—Type 1 and Type 3. Type 1 includes medium carbon bolts, and Type 3 includes weathering steel bolts. Depending on the diameter, the specified minimum tensile strength ranges from a minimum of 90 to 120 ksi (620 to 830 MPa). The carbon content may be up to 0.52% for Type 1 and 0.48% for Type 3.

ASTM F3043 Standard Specification for "Twist Off" Type Tension Control Structural Bolt/Nut/Washer Assemblies, Alloy Steel, Heat Treated, 200 ksi Minimum Tensile Strength

F3043 covers twist off bolts that are the equivalent to ASTM F3111, and weldability is the same as that of F3111 bolts.

ASTM F3111 Standard Specification for Heavy Hex Structural Bolt/Nut/Washer Assemblies, Alloy Steel, Heat Treated, 200 ksi Minimum Tensile Strength

F3111 has a very high specified minimum tensile strength of 200 ksi (1380 MPa). The chemical composition of the bolt is well defined, but the defined limits are such that weldability will routinely be poor.

ASTM F3125/F3125M Grade A325 Standard Specification for High Strength Structural Bolts, Steel and Alloy Steel, Heat Treated, 120 ksi Minimum Tensile Strength

ASTM F3125 Grade A325 includes two types of quenched and tempered bolts. Type 1 bolts are medium carbon bolts, while Type 3 bolts are for weathering steel applications. Type 1 bolts may have up to 0.52% carbon. Type 3 bolts may be supplied to one of three compositions—A, B, and a composition based on a corrosion index.

ASTM F3125/F3125M Grade A490 Standard Specification for High Strength Structural Bolts, Steel and Alloy Steel, Heat Treated, 150 ksi Minimum Tensile Strength

ASTM F3125 Grade A490 covers two types of bolts—Type 1 and Type 3. Type 3 bolts are used for weathering steel applications. Both types are quenched and tempered with a specified minimum tensile strength of 150 ksi (1040 MPa). Type 1 has a carbon range of 0.30 to 0.48%, while Type 3 has a range of 0.30 to 0.53%.

ASTM F3125/F3125M Grade F1852 Standard Specification for "Twist Off" Type Tension Control Structural Bolts, Steel, Heat Treated, 120 ksi Minimum Tensile Strength

F3125 Grade F1852 covers twist off bolts that are the equivalent to ASTM F3125 Grade A325, and weldability should be the same.

ASTM F3125 Grade F2280 Standard Specification for "Twist Off" Type Tension Control Structural Bolt, Heat Treated, 150 ksi Minimum Tensile Strength

ASTM F3125 Grade F2280 covers twist off bolts that are the equivalent to ASTM F3125 Grade A490, and weldability should be the same.

Table 5-2 summarizes the weldability issues associated with structural bolts.

The methodology used in the creation of Table 5-2 does not follow any standard but was created to estimate weldability. Except for ASTM A307 bolts ordered with supplementary requirement S1, regardless of the bolt type and grade, preheat probably will need to be in the 400 to 450°F (200 to 230°C) range for successful welding. Controlled hydrogen electrodes should be used. The heat input should be limited (use small beads) and the bolt temperature should not exceed 1,000°F (540°C). Finally, the welding technique and procedure should be tested and the effect of the welding heat on the strength of the bolt should be evaluated.

One way to test the suitability of the welding procedure and technique is to weld the bolt to a piece of steel and install a pipe washer around the bolt as shown in Figure 5-5. A washer is placed on top of the pipe washer and a nut installed. The bolt can be tensioned as if in an actual connection. Or, if the only goal is for the weld to only temporarily hold the bolt in place, the welds can be allowed to fracture. Fracture of the welds through the throat is good; fracture of the weld from the nut indicates there are likely problems with the procedure.

To evaluate the effect of heat on the strength of the bolt, the following test can be performed: (1) perform the required welding on the bolt; (2) grind the weld off, freeing the bolt from the piece to which it is welded; and (3) test the bolt in a pre-verification test.

Although the ASTM specifications permit the chemical compositional limits discussed for the various bolt types, the actual composition will not be at the maximum limits and may have better weldability than the ASTM limits would suggest. Therefore, testing should be performed on bolts from the same production lot as will be used in construction.

5.4.12 Nuts

The AISC *Specification* lists two specifications for structural nuts—ASTM A194 and ASTM A563 (ASTM, 2016). ASTM A194 covers a variety of nut grades; only 2H will be addressed in this Guide. ASTM A563 provides requirements for eight grades of nuts; one grade (C3) has seven classes. This Guide will address the weldability of the nut grades permitted by the AISC *Specification*. Table 5-3 provides a general summary of the properties of different nuts along with a general estimate of weldability.

Table 5-3 was developed using the same methodology as was used for Table 5-2. Two trends can be seen in the table—if nuts must be welded, ASTM A563 Grade C3-C, C3-D, C3-E and C3-F are likely to be the easiest to weld. Welding on ASTM A563 Grade C, DH and DH3 are likely to be problematic. However, it must be noted that the delivered nut may have a chemical composition that is much less than the level permitted by the ASTM specification. For example, while ASTM A563 Grade DH3 permits up to 0.53% carbon, the actual level could be as low as 0.20%. Despite the rating of "8," Grade DH3 has been successfully welded in the past.

When nuts are welded, a 400 to 450°F (200 to 230°C) preheat is likely needed. Controlled hydrogen electrodes should be used. The heat input should be limited (use small beads) and the temperature of the nut should not exceed 1,000°F (540°C). Finally, the welding technique and procedure should be tested. One way to test the suitability of the procedure is to weld the nut to a piece of steel, insert and tighten a bolt, as shown in Figure 5-6. Fracture of the welds through the throat is good; fracture of the weld from the nut indicates there are likely problems with the procedure.

A final comment about welding on nuts—typically, the

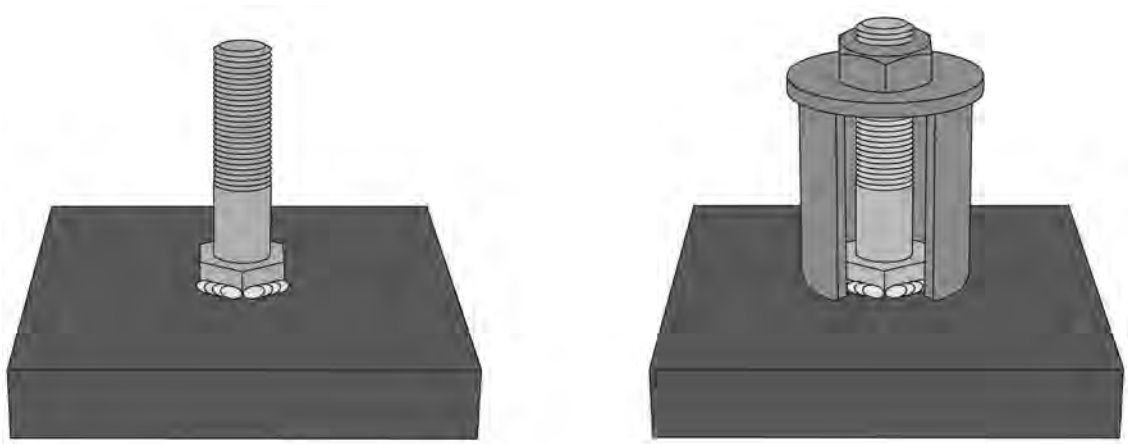

Fig. 5-5. Bolt weldability test.

Table 5-2. Weldability of Structural Bolts								
ASTM Spec.	**Grade/ Type**	**Carbon (%)**	**Alloy Control for Weldability**	***P* (%) Maximum**	***S* (%) Maximum**	**Specified Minimum Tensile Strength,[a] ksi (MPa)**	**Heat Treatment**	**Relative Weldability (High = Poor)**
A307	A	0.29 maximum	Little control[b]	0.04	0.15	60 (415)	Annealed option	4
	A with supplement S1	0.29 maximum (but with CE limit)	CE limit	0.04	0.050	60 (415)	Annealed option	0
	B	0.29 maximum	Little control[b]	0.04	0.050	60 (415)	Annealed option	2
	B with supplement S1	0.29 maximum (but with CE limit)	CE limit	0.04	0.050	60 (415)	Annealed option	0
A354	BC	0.30–0.53	Little control[b]	0.035	0.040	115–125 (860–800)	Q&T	6
	BD	0.30–0.53	Little control[b]	0.035	0.040	140–150 (965–1040)	Q&T	7
A449	Type 1	0.30–0.52	Little control[b]	0.040	0.050	90–120 (620–828)	Q&T	6
	Type 3-A	0.33–0.40	Little control[b]	0.035	0.040	90–120 (620–828)	Q&T	5
	3-B	0.38–0.48	Little control[b]	0.06–0.12	0.040	90–120 (620–828)	Q&T	6
	3-C	0.15–0.25	Little control[b]	0.035	0.040	90–120 (620–828)	Q&T	4
	3-D	0.15–0.25	Little control[b]	0.035	0.040	90–120 (620–828)	Q&T	4
	3-E	0.20–0.25	Little control[b]	0.035	0.040	90–120 (620–828)	Q&T	4
	3-F	0.20–0.25	Little control[b]	0.035	0.040	90–120 (620–828)	Q&T	4
F3043 and F3111	–	0.38–0.42	Good[c]	0.010	0.010	200–215 (1380–1484)	Q&T option	8
F3125 Grade A325 and Grade F1852	1	0.30–0.52	Little control[b]	0.035	0.040	120 (830)	Q&T	5
	3-A	0.33–0.40	Little control[b]	0.035	0.040	120 (830)	Q&T	5
	3-B	0.38–0.48	Little control[b]	0.035	0.040	120 (830)	Q&T	5
	3-C	0.30–0.52	Little control[b]	0.035	0.040	120 (830)	Q&T	5
F3125 Grade A490 and Grade F2280	Type 1	0.30–0.48	Little control[b]	0.035	0.040	150 (1040)	Q&T	6
	Type 3	0.30–0.53	Little control[b]	0.035	0.040	150 (1040)	Q&T	8

Notes: This table is used to estimate weldability. The actual ASTM specification should be used if specific properties are needed.

Data in the table that are good from a weldability viewpoint were left white, while the most undesirable data were shaded dark grey, and light grey was used for data between the two extremes. The summary in the column, Alloy Control for Weldability, is based on the dark fields representing two points, light grey representing one, and white being zero.

[a] Tensile strength values depend on the bolt diameter.

[b] The term "Little control" is intended to be applied only in terms of weldability; the suitability of the ASTM designation on the control of the composition of the bolt as used as a mechanical fastener is not being drawn into question.

[c] Although the chemistry control is good for these bolt grades, the chemical composition is such that this material is difficult to weld.

need to weld on a nut is to simply keep the nut in place until the weld is made. Accordingly, even if the weld fails when the bolt is installed, it is probably inconsequential. When the serviceability of the connection depends on the quality of the welded nut connection, alternative systems should be investigated.

5.4.13 Washers

Welding on hardened washers should be avoided. Weldable washers can be cut from structural steel of known weldability.

5.4.14 Anchor Rods

A variety of materials can be and have been used for anchor rods. The AISC *Specification* lists seven grades of anchor rods as follows: ASTM A36, A193, A354, A449, A572, A588 and F1554 (ASTM, 2016). The preferred specification for anchor rods is ASTM F1554.

For a variety of reasons, it may be desirable to weld on anchor rods; a common example involves extending anchor rods that are too short (see Section 15.1.2 of this Guide). Another example is when nuts need to be secured to the ends of anchor rods before they are installed. In the case of the latter, it is generally preferred to mechanically deform the threads of the rod that extend beyond the nut because the goal is to simply keep the nut in place until the rod is set in concrete. If welding is done, the weld should be on the outboard side of the assembly; if the weld cracks, it will still preclude the nut from coming off the anchor rod. Welds placed on the inboard side of the nut may result in cracking the anchor rod.

Some anchor rods have good weldability while others do not. Rods made of ASTM A36, A572 and A588 have welding characteristics that are identical to plates or shapes of the same ASTM classification. The weldability of other grades of anchor rods must be determined. AWS D1.1 does not contain requirements for welding on products like bars, bolts, nuts and rods. Some anchor rod grades will be listed as prequalified steels in AWS D1.1, while others are not. When such welding is to be performed, specifications must be developed for each job.

The weldability of various anchor rods is dependent on the anchor rod grade and the corresponding chemical composition and heat treatment. Various material specifications that have been used for anchor rods are discussed in the following with general welding guidelines. These guidelines are necessarily conservative and while caution is recommended, anchor rods have been successfully welded when proper procedures are developed and followed. The discussion of the welding characteristics of the following materials does not imply that these are suitable specifications for anchor rod applications.

The weldability of ASTM A354 and A449 are discussed under Bolts in Section 5.4.11 of this Guide. Because the weldability of ASTM A36, A572 and A588 anchor rods should be the same as plate or shapes made of the same material, the only remaining anchor rod material to be addressed is the preferred material, namely ASTM F1554.

ASTM F1554 Standard Specification for Anchor Bolts, Steel, 36, 55, and 105-ksi Yield Strength

ASTM F1554 covers three grades of material reflecting the specified minimum yield strengths and corresponding to tensile strengths of 58 to 80 ksi (400 to 552 MPa), 75 to 95 ksi (517 to 655 MPa), and 125 to 150 ksi (862 to 1034 MPa), respectively.

ASTM F1554 Grade 36 anchor rod has a chemical composition very much like ASTM A36. A footnote to Table 1 in the specification indicates that for rod diameters of up to ¾ in. (18 mm), the manganese content is "optional with the manufacturer, but shall be compatible with weldable steel." The specification also permits the substitution of weldable Grade 55 when Grade 36 is specified, at the supplier's option.

ASTM F1554 Grade 55 and Grade 105 both have compositions controlled by Table 2 in the specification, which only controls the maximum limits of phosphorus (0.040%) and sulfur (0.050%). However, Grade 55 can be supplied with an optional supplementary requirement S1 when it is intended to be welded. This imposes a maximum limit on the carbon,

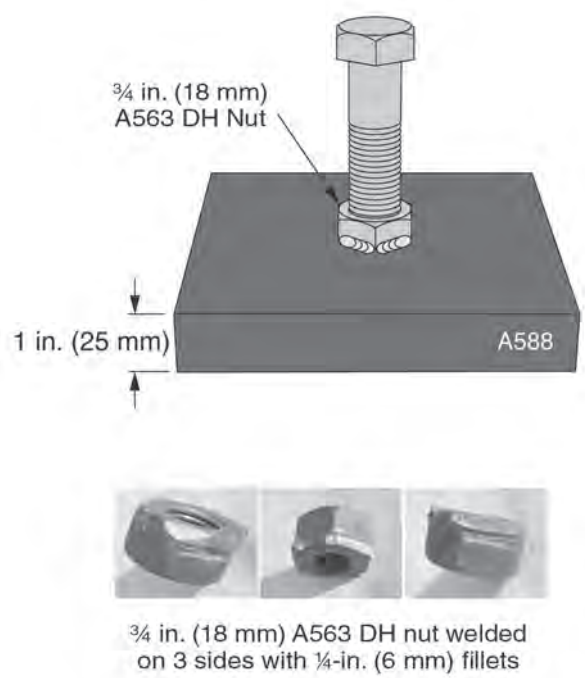

Fig. 5-6. Nut weldability test.

Table 5-3. Weldability of Structural Nuts								
ASTM Spec.	**Grade/ Class**	**Carbon (%)**	**Alloy Control for Weldability**	***P* (%) Maximum**	***S* (%) Maximum**	**Minimum Tensile Strength,[a] ksi (MPa)**	**Heat Treatment**	**Relative Weldability (High = Poor)**
A194	2H	0.40 minimum	Little control[b]	0.040	0.050	150 (140)	Q&T	7
A563	A	0.55 maximum	None	0.12	0.23	100[c] (690[c])	Q&T	11
	C	0.55 maximum	None	0.12	0.15	144 (994)	Q&T option	11
	C3-N	No control	Little control[b]	0.07–0.15	0.050	144 (994)	Q&T option	8
	C3-A	0.33–0.40	Good	0.040	0.050	144 (994)	Q&T option	5
	C3-B	0.38–0.48	Good	0.06–0.12	0.050	144 (994)	Q&T option	6
	C3-C	0.15–0.25	Good	0.035	0.040	144 (994)	Q&T option	3
	C3-D	0.15–0.25	Good	0.040	0.050	144 (994)	Q&T option	4
	C3-E	0.20–0.25	Good	0.040	0.040	144 (994)	Q&T option	3
	C3-F	0.20–0.25	Good	0.040	0.040	144 (994)	Q&T option	3
	D	0.55 maximum	Little control[b]	0.040	0.050	150 (1040)	Q&T option	5
	DH	0.20–0.55	Little control[b]	0.040	0.050	175 (1210)	Q&T	7
	DH3	0.20–0.53	Minimum limits only	0.046	0.050	175 (1210)	Q&T	8

Note: This table is used to estimate weldability. The actual ASTM specification should be used if specific properties are needed.

[a] Proof load stress.

[b] The term "Little control" is intended to be applied only in terms of weldability; the suitability of the ASTM designation on the control of the composition of the nut as used as a mechanical fastener is not being drawn into question.

[c] For non-zinc coated nuts; 75 ksi (518 MPa) for zinc coated nuts.

manganese, phosphorus, sulfur and silicon content. Additionally, two carbon equivalency limits are provided, one for alloy or low-alloy steel and another for carbon steel. When the supplier chooses to substitute Grade 55 for Grade 36, the substituted material is required to meet the optional S1 requirements that ensure good weldability.

The weldability of ASTM F1554 Grade 55 (without the optional S1 requirements) should be investigated before any welding is done. Grade 55 ordered with supplementary requirement S1 should be readily weldable. Given the strength level of Grade 105, and the fact that no option is provided for supplementary requirements for improved weldability of this grade, it is not recommended for welding.

Heavy shape with large welds (photo courtesy of The Lincoln Electric Company).

Chapter 6
Weld Cracking

6.1 INTRODUCTION

Some weld discontinuities, such as porosity, are acceptable within certain limits. In the case of cracking, none is permitted according to AWS D1.1, Table 6.1 (AWS, 2015c). Fortunately, cracking rarely occurs when fabrication is properly done in accordance with modern specifications because these standards require careful control of the factors that might otherwise lead to cracking. When cracking does occur, it is typically the result of one or more variables being significantly outside the expected range of acceptability.

Because of the serious nature of cracking, AWS D1.1, clause 5.25.3, requires that the engineer be notified before repairs are made to major or delayed cracks, as well as prior to repairs for some types of cracks in the base metal. While the reason for such notification is not stated in the code, it provides an opportunity to examine the circumstances surrounding the cracking and also to consider the implications of the repair on the final structure. Ideally, the cause can be established so as to preclude the reoccurrence of such cracking.

For the purposes of this chapter, weld cracking will be distinguished from weld failure. While the physical appearance of the two may be similar, the term weld cracking will be used to describe cracking that occurs during or near the time that welding is performed. In service, welds may fail (crack) due to overload or fatigue, for example, but cracking as discussed in this chapter is due to weld solidification, cooling and shrinkage, not service loads that are applied during the life of the structure.

Weld cracks can be divided into two broad categories—hot cracks and cold cracks. Hot cracks occur only when the weld is at elevated temperatures; such cracks are solidification related. Hot cracking may also be called solidification or liquation cracking. If the weld metal cannot deform by yielding to accommodate the shrinkage stresses, cracking can occur; this is the essence of hot cracking. Cold cracks, in contrast, only occur when the weld is relatively cool and are hydrogen related. If the cooler steel or weld metal cannot accommodate the residual stresses of welding when hydrogen is introduced, cracking can occur; this is the essence of cold cracking. Totally different mechanisms cause hot and cold cracks, and correspondingly, different solutions must be employed to overcome these problems.

In a welded connection, three distinct zones exist: the weld metal, the heat affected zone (HAZ), and the base metal. Cracking may occur in any of these three regions, with cracking in the weld or HAZ being more predominant. Sometimes cracking occurs in the base metals, but such cracking is usually the result of cracks that have initiated in the weld or HAZ and propagated into the base metal. Cracks in both the weld and the HAZ will be considered in this chapter, as well as lamellar tearing, a cracking-like problem that occurs in base metal and is related to welding.

A HAZ is "the portion of base metal whose mechanical properties or microstructure have been altered by the heat of welding…" (AWS, 2010d). The HAZ does not melt and therefore does not resolidify. However, the HAZ is heated by welding and subsequently cools, resulting in localized changes in mechanical and metallurgical properties but not to the chemical composition. For steel applications, the HAZ is generally equal to or higher than the base metal in terms of yield and tensile strength. Typically, the HAZ will have localized regions of both increased and decreased fracture toughness. These changes in fracture toughness depend on a number of factors that include welding heat input, cooling rate, and the chemical composition of the base metal.

6.2 SHRINKAGE AND RESTRAINT

The various forms of weld cracks are all driven by at least two common factors—the shrinkage of the weld and surrounding base metal that was heated and expanded by welding, and the restraint that is offered by the surrounding base metal as it resists the shrinkage. Conceptually at least, if metal did not expand during heating, or shrink during cooling, welds would not crack. Furthermore, if no restraint or resistance to such expansion and contraction existed, no cracking would occur. However, volumetric changes with temperature are real, as are constraints to such volumetric changes. Additionally, other factors may further aggravate cracking tendencies. Given that all arc welding processes involve thermal expansion and contraction, along with constraint, these two topics will be discussed before addressing the specific details of the various cracking mechanisms.

6.2.1 Shrinkage

To understand the magnitude of the shrinkage strains involved, consider a steel bar with dimensions of 1 in. × 1 in. × 10 in. (25 mm × 25 mm × 250 mm). If the bar is made of steel with 50-ksi (345 MPa) yield strength, it will elastically elongate a total of 0.016 in. (0.410 mm) if mechanically loaded to the yield stress. If the same bar in an unloaded condition is heated from a room temperature of 70 to 300°F (21 to 149°C), it will expand the same amount. Additional

heating will cause the bar to expand further, and if heated to the point of melting, the thermal elongation is approximately 10 times the yield point elongation.

When liquid weld metal solidifies in the joint, the solid but hot weld metal occupies more space than it will when it has cooled. To accommodate the aforementioned shrinkage that is approximately 10 times the yield point elongation, yielding must occur. Most of this yielding takes place in the weld metal, and this is easily accomplished at elevated temperatures due to the low yield strength of the hot weld metal. As the weld cools and becomes stronger, shrinkage continues to occur, along with more localized yielding. At the point where the shrinkage stresses equal the resistance offered by the surrounding base metal, the shrinking stops. A state of equilibrium is achieved, with residual tensile stresses in and around the weld resisted by compressive stresses in the base metal.

6.2.2 Restraint

During welding, significant thermal gradients exist within a material, ranging from the melting temperature of steel down to room temperature. As the hot, expanded weld metal and surrounding hot base metal begin to cool, these materials volumetrically contract while the colder surrounding steel resists this contraction. The degree of resistance offered depends on the volume and strength of the colder material, as well as the stiffness of the configuration of the material. Also, because the strength and modulus of elasticity change with temperature, the temperature of the surrounding steel is another factor.

It is not possible to simply quantify mathematically the degree of restraint offered by the surrounding steel, but an intuitive feel can be developed. Consider, for example, a butt splice joining two 3-in. × 10-in. × 20-ft (75 mm × 250 mm × 6 m) flat plates into a single 40-ft-long member (12 m). Even though the steel is 3 in. (75 mm) thick, the required weld is only 10 in. (250 mm) long, and while the required weld will shrink, there will be little resistance to this shrinkage. Hence, cracking concerns would be minimal in this particular situation.

Next, consider a splice to join two 20-ft (6 m) lengths of a W14×730, with 5-in.- (125 mm) thick flanges and a web that is 3 in. (75 mm) thick, and a *T*-dimension of 10 in. (250 mm). Furthermore, assume that the flange butt splices have already been made, and the only remaining weld is the web splice. Even though the weld required on the web for this splice is essentially identical to the previous example, the restraint is significantly greater, increasing cracking concerns. The feel for the difference should be obvious.

Experience has shown that as base metal thicknesses become greater than 1½ in. (38 mm), as steel strength levels increase beyond 50 ksi (345 MPa), and when members intersect from all three geometric directions, high restraint will be experienced at the intersections of the materials. Under such conditions, special precautions may be required with respect to weld detailing, preheating, weld sequencing, welding procedures, filler metal selection, interpass temperature, and post-welding thermal operations. The use of residual stress-reduction measures such as peening or in-process stress relief may be necessary under extreme conditions. Details of these techniques are discussed in Sections 6.5, 6.6 and 6.7 of this Guide.

6.3 TYPES OF WELD CRACKS

Weld cracking may be categorized based upon the crack orientation and location of occurrence in one of the following ways: centerline cracking, HAZ cracking or transverse cracking. Additionally, there is the welding-related phenomenon of lamellar tearing.

6.3.1 Centerline Cracking

Centerline cracking is a separation near the center of a given weld bead. If the weld bead happens to be in the center of the joint, as is always the case on a single-pass weld, centerline cracks will generally be in the center of the joint. In the case of multiple-pass welds where several beads per layer may be applied, a centerline crack may not be in the geometric center of the joint, although it will always be near the center of a weld bead as shown in Figure 6-1.

Centerline cracking results from one of the following three phenomena: segregation-induced cracking, bead-shape-induced cracking, or surface-profile-induced cracking. Unfortunately, all three phenomena result in cracks that have the same general appearance, and it may initially be difficult to identify the precise cause. Experience has shown that often two or even all three of the phenomena will interact and contribute to the cracking problem. Understanding the fundamental mechanism of each of these types of centerline cracks will help in determining the corrective solutions.

Regardless of cause, centerline cracks are hot cracks that are solidification related. The volumetric contraction that occurs as the metal transforms from a hot liquid to a hot solid and then to a warm solid creates the driving force for this type of cracking. When castings are made, the same phenomenon can lead to separations called hot tears, which can also occur in the cast ingots used in integrated-mill steelmaking practices. Centerline cracks will either be present

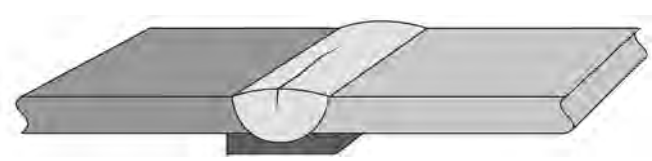

Fig. 6-1. Centerline cracking.

after solidification has taken place, or they will not occur. While other types of cracking may occur as the weld metal and surrounding steel cool (i.e., cold cracks), there is no continued risk of solidification cracking after the weld cools to room temperature.

Centerline cracks typically, but not always, extend to the surface (face) of the weld. In a multipass weld, it is possible to weld over a previous bead that contained a surface breaking centerline crack, burying the crack internally. This possibility emphasizes the importance of good, in-process inspection of previously deposited weld beads. In some situations, centerline cracks can be internal to the individual weld bead and not be surface-breaking, although this is the exception. Such anomalous behavior is typically associated with improper width-to-depth ratios, discussed under *Bead-Shape-Induced Cracking*.

Segregation-Induced Cracking

Segregation-induced cracking occurs when low-melting-point constituents in the admixture segregate during the weld solidification process. As the weld metal solidifies, elements and compounds with low melting temperatures are concentrated into the liquid metal and move toward the center of the weld bead or between the solidifying grains of weld metal. The enrichment of the remaining liquid material with the low-melting-point materials can lead to segregation-induced cracking.

In Figure 6-2, the weld metal is initially entirely molten. As solidification begins, the grains of steel begin to grow, generally perpendicular to the fusion interface. In an iron-carbon system, the first materials to solidify are typically lower in carbon content because pure iron has a higher freezing point than iron-carbon mixtures. Thus, segregation begins to occur.

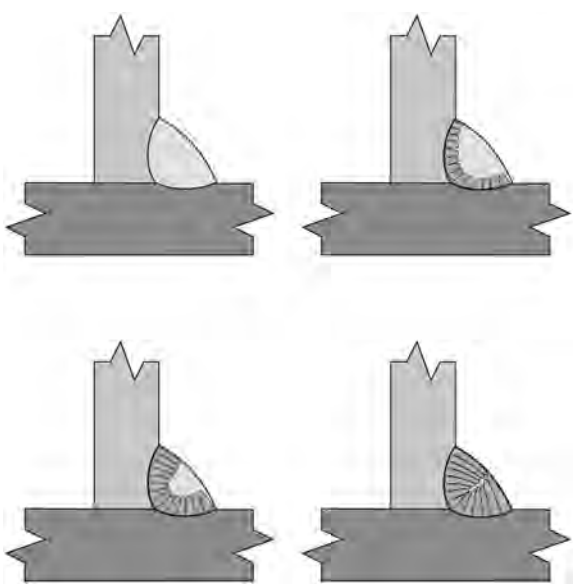

Fig. 6-2. Grain growth and centerline cracking.

The degree of segregation is a complex issue and is a function of the solubility of the element or compound in liquid iron, as well as the rate at which solidification takes place. In general, however, the low-carbon layer that begins to form first results in higher levels of carbon being pushed into the still-liquid center of the weld bead. Other low-melting-point constituents can also be forced into this liquid center. As solidification progresses, the last portion of the bead to solidify is in the center of the cross section. This is the location that will contain any remaining components that have the lower freezing point. In the case of some low-melting-point ingredients, the segregation takes place on a more localized basis, where individual elements segregate as individual grains form, expelling the still-liquid ingredients to the grain boundaries.

Perhaps the most frequently encountered contaminant from steel is sulfur. In the presence of iron, the sulfur will combine to form iron sulfide (FeS). Iron sulfide has a melting point of approximately 2,200°F (1200°C). Steel, on the other hand, has a melting point of approximately 2,800°F (1500°C). As the grains grow, iron sulfides are forced into the center of the joint. Well after all of the steel has solidified, the liquid iron sulfides with a melting point 600°F (320°C) less than that of the steel will be contained in the center of the weld bead. As the steel cools, it contracts, pulling on the center of the weld bead, which contains the weak liquid iron sulfide. As shown in Figure 6-2, the weld bead will crack.

Phosphorus, lead, copper and other low melting temperature elements will act in a similar manner as was previously described with sulfur. The primary difference with these elements and sulfur is that they do not form compounds, but are present in their basic form. The commercial welding processes are all capable of tolerating low levels of these contaminants. However, when higher levels are experienced, segregation occurs and may result in centerline cracking. Whereas these elements may come from the filler material, they are more commonly the result of base material composition or surface contaminations; therefore, they must be controlled in the base materials.

When centerline cracking induced by segregation is experienced, several solutions may be implemented. The most straightforward solution is to use materials that have low levels of such contaminants. The steels listed in the AISC *Specification* and AWS D1.1 have limits on the problematic elements in the steel. That does not mean that such steels will never have problems, however. Steels with compositions within the specification, but nevertheless high in such low-melting-point ingredients, can be problematic. Furthermore, the possibility of an improperly identified material exists.

When welding on steels enriched with low-melting-point

ingredients is required, it is desirable to limit the amount of pickup of the undesirable material. In some cases, the groove weld geometry can be changed, reducing the required level of admixture. The extra penetration afforded by some of the processes may not be necessary and, if this is the case, the extra penetration can be reduced. This can be accomplished by using lower welding currents or by changing the polarity [for submerged arc welding (SAW)].

A buttering layer of weld material as shown in Figure 6-3, deposited by a low-energy process such as shielded metal arc welding (SMAW), may effectively reduce the amount of pickup of contaminant into the weld admixture. See Section 14.16 of this Guide for a discussion of buttering.

In the case of sulfur, it is possible to overcome the harmful effects of iron sulfides by preferentially forming a mixed manganese sulfide (MnS). This sulfide forms when sufficient levels of manganese are present to create this compound rather than iron sulfide. Manganese sulfide has a melting point of 2,900°F (1600°C). In this situation, before the weld metal begins to solidify, manganese sulfides are formed and do not segregate. Steel producers utilize this concept when higher levels of sulfur are encountered in the iron ore or the steel scrap. In welding, it is possible to use filler materials with higher levels of manganese to overcome the formation of low-melting-point iron sulfide. Unfortunately, this concept cannot be applied to contaminants other than sulfur.

The amount of manganese required to avoid cracking depends on the level of sulfur in the weld deposit as well as the carbon content. A Mn:S ratio exceeding 10:1 is always desirable, and when the carbon content exceeds 0.12%, the Mn:S ratio should be increased. Figure 6-4 presents a graphical representation of when cracking is likely to occur, below the curve, and when it is not likely to occur, above the curve (Kou, 2003).

Segregation-related cracking tendency is based upon the composition of the weld deposit, which is composed of both base metal and filler metal. The weld metal analysis can be estimated based upon approximations of the amount of admixture that will be experienced. To increase the Mn:S ratio, Mn can be increased and S can be decreased. Typically, this is done through the use of lower S base metals, minimizing base metal admixture levels, and using filler metals with higher Mn levels.

Segregation takes time to occur; slower weld solidification and cooling rates encourage this behavior. Thus, the risk of cracking due to segregation is increased with higher heat-input (often resulting from high amperage levels, which correspondingly increase admixture levels) and higher preheat levels. This may seem counterintuitive because slow cooling rates help reduce cold cracking tendencies. In the case of hot cracking, techniques that slow the cooling rate hurt rather than help.

Bead-Shape-Induced Cracking

The second type of centerline cracking is known as bead-shape-induced cracking. This is illustrated in Figure 6-5 and is most often associated with deep-penetrating processes such as SAW and gas-shielded flux-cored arc welding (FCAW-G). When the cross section of a single-weld bead is of a shape where there is more depth than width, the solidifying grains grow generally perpendicular to the steel surface to which they are attached and intersect in the middle, but do not gain fusion across the joint. To correct for this condition, the individual weld beads must have at least as much width as depth. Recommendations vary from a 1:1 to a 1.4:1 width-to-depth ratio to remedy this condition.

The final overall weld configuration may have a profile that constitutes more depth than width without fear of centerline cracking, provided each individual weld bead has

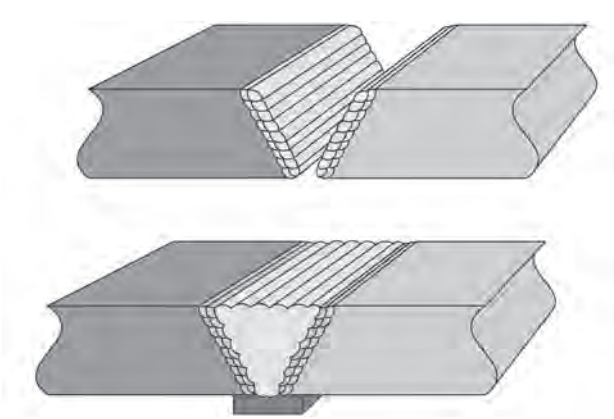

Fig. 6-3. Buttering of groove weld face.

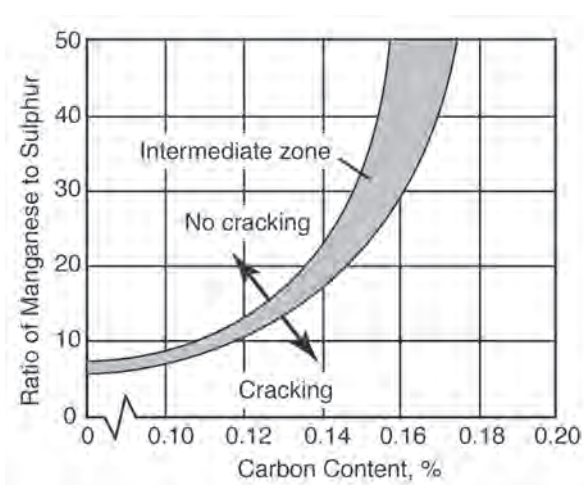

Fig. 6-4. The effect of Mn:S ratio compared to carbon content (adapted from Kou, 2003).

more width than depth. If multiple passes are used in this situation, and each bead is wider than it is deep, a crack-free weld can be made. Some authors refer to this type of cracking in terms of depth-to-width ratio versus width-to-depth ratio, as has been done here. When this is done, the preferred ratios are less than 1.0. One ratio is simply the inverse of the other, and either approach is acceptable. This practice has, unfortunately, caused some needless confusion when seemingly conflicting data for recommended profiles have been offered; a width-to-depth ratio recommendation of 1.25 is the same as a recommendation of 0.8 for a depth-to-width ratio.

Joint design affects the tendency toward centerline cracking induced by bead shape. The prequalified joint details in AWS D1.1 have taken this into account. Consider, for example, the three joints listed in Figure 6-6. Known as a B-U2a, the combination of root opening and included angle is adjusted to encourage the formation of a root pass with an acceptable width-to-depth ratio. As the included angle is decreased, the tendency toward a narrow, deep bead increases. To compensate for this, a larger root opening is used. For partial-joint-penetration (PJP) groove welds, the preferred configuration for a single-bevel joint is to have a minimum of a 60° included angle when the SAW process is used. With the deep penetration afforded by this process, a 45° included angle could lead to unacceptable centerline cracking as shown in Figure 6-7. Other processes may use smaller included angles because they lack the penetration capacity that would create this unacceptable relationship. However, these processes rarely obtain fusion down to the root under such tight joint configurations.

Centerline cracking due to bead shape occurs in both groove and fillet welds. It is rarely experienced in fillet welds when applied to 90° T-joints because the weld face is always twice the weld throat (for welds made with fusion to the root and not beyond). However, when welds are applied to the acute side of skewed joints, particularly when the acute angle is less than 70°, centerline cracking may occur. This tendency is made worse when the welding process has significant penetration capability.

When centerline cracking due to bead shape is experienced, the first consideration should be to change the weld joint details, which typically requires an increase in the included angle and/or root opening. Because the weld bead depth is a function of penetration, it may be necessary to reduce the amount of penetration. This can be accomplished by utilizing lower welding amperages and larger diameter electrodes, both of which will reduce the current density and limit the amount of penetration.

Surface-Profile-Induced Cracking

A third mechanism that generates centerline cracks is the surface profile condition. When the surface of an individual weld bead is concave, internal shrinkage stresses will place the weld metal on the surface into tension. Conversely, when a convex weld surface is created, the internal shrinkage forces pull the surface into compression. These situations are illustrated in Figure 6-8. In addition to being crack sensitive, excessively concave fillet welds may have acceptable leg dimensions but lack the required throat dimension as shown in Figure 6-9.

Concave weld surfaces frequently are the result of high arc voltages. A slight decrease in arc voltage will cause the weld bead to return to a slightly convex profile and eliminate the cracking tendency. Vertical-down welding also has the tendency to generate these crack-sensitive, concave surfaces. Vertical-up welding can remedy this situation by providing

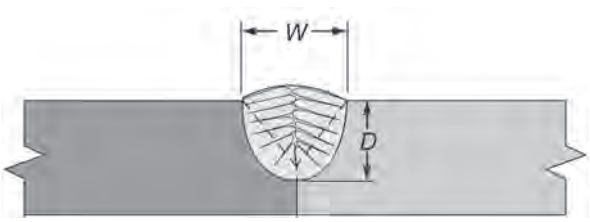

Fig. 6-5. Width-to-depth ratio.

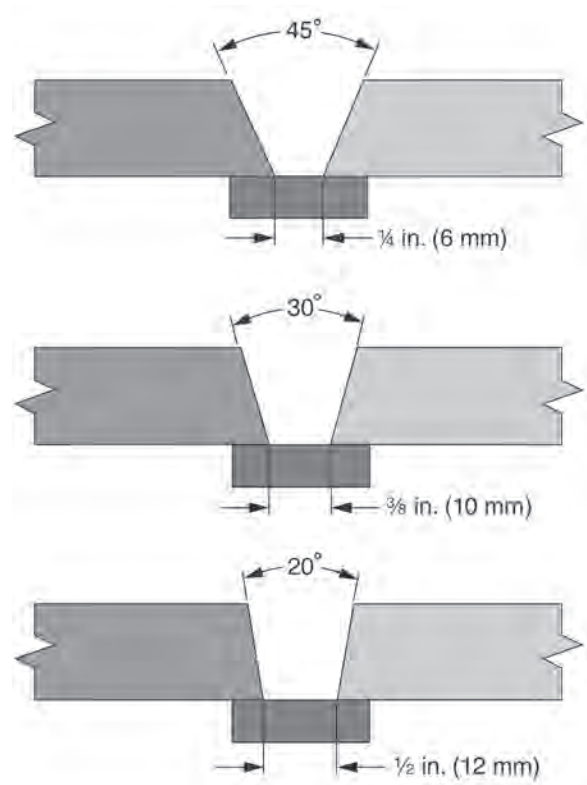

Fig. 6-6. Groove weld details and root conditions.

a more convex bead. For gas-shielded processes, such as gas metal arc welding (GMAW) and FCAW-G, a change in shielding gas can change the surface profile.

Weld Pool Length Cracking

There is a fourth cause of centerline cracking that is caused when the weld pool (puddle) becomes long and tear-drop shaped. Because this typically is associated with higher welding travel speeds that are not commonly used for structural steel applications, it will not be addressed in this Guide.

6.3.2 HAZ Cracking

HAZ cracking is characterized by separation that occurs in the region immediately adjacent to the weld bead as shown in Figure 6-10. The cracking occurs in the base material, and although it is certainly related to the welding process, the crack does not occur in the weld material. This type of cracking is also known as underbead cracking, toe cracking or delayed cracking. HAZ cracking is one form of cold cracking; it cannot occur when the steel is hot. In structural steels, it is unlikely to occur if the temperature is above 300°F (150°C) (Bailey, 1994).

HAZ cracking occurs due to three factors:

- A sufficient level of hydrogen
- A susceptible HAZ microstructure
- Applied or residual stresses

Some authors will add time, temperature or both to this list. As has been mentioned, the steel must cool sufficiently, and this cooling takes time. Further, it may take time for a sufficient level of hydrogen to accumulate in the HAZ. Eventually, however, the steel will cool and sufficient time will transpire to achieve these two criteria and therefore, they are not included here as primary factors. However, as will be discussed, there are ways that time and temperature can be manipulated to reduce cracking tendencies.

The fact that HAZ cracking is delayed, however, warrants

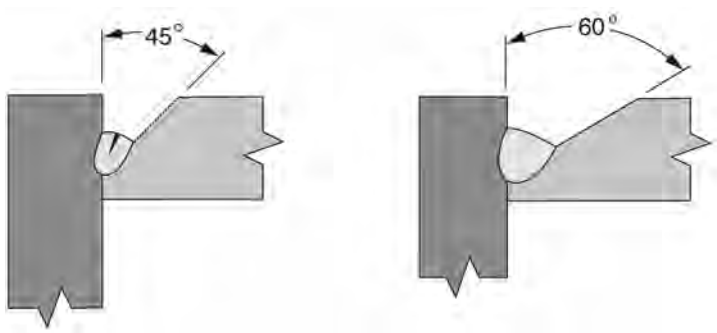

Fig. 6-7. Effect of included angle on cracking.

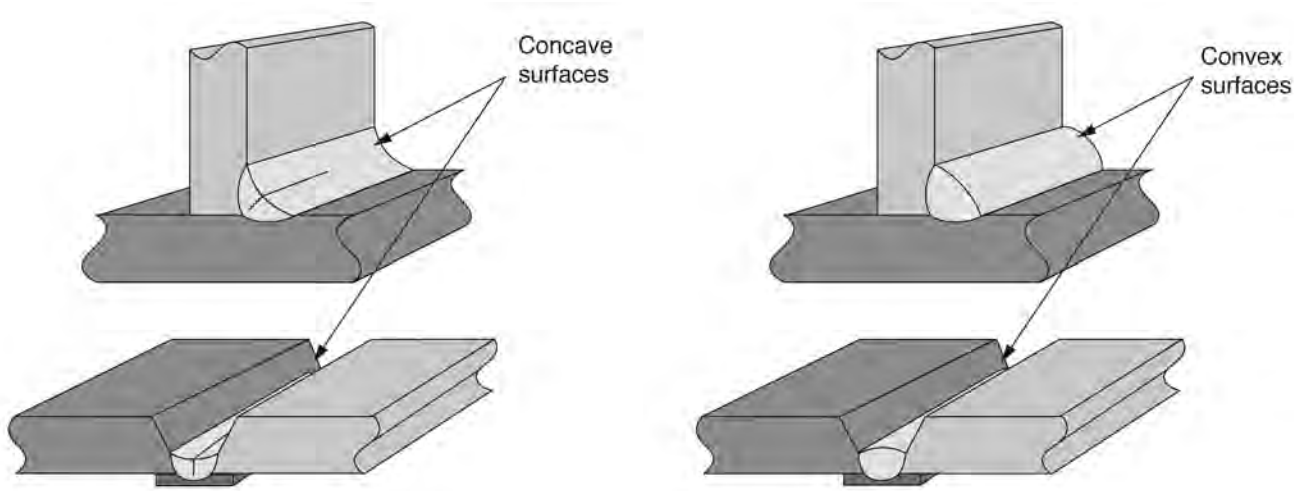

Fig. 6-8. Surface profile and cracking.

some discussion. First, the time element gives rise to the description of delayed cracking. The reason for the delay is that it takes time for the diffusible hydrogen to move in the steel to form concentrations that will cause cracking. This is sometimes called an incubation period, and estimates for the required time range from 16 to 72 hours (Bailey, 1994). Some authors suggest that hydrogen present in excessive quantities can cause cracking as soon as the steel cools to room temperature. The more common and the more problematic situation is when there is some delay.

The natural implication of the delayed nature of the cracking is that weldments can be inspected and accepted before cracking has occurred. For this reason, AWS D1.1, clause 6.11, requires a delay of 48 hours after completing the welds before nondestructive testing (NDT) is performed on quenched and tempered ASTM A514 and A517, 100-ksi (690 MPa) yield strength steels, which are particularly sensitive to hydrogen cracking.

Many theories explaining the mechanics of hydrogen cracking have been proffered over the years, and no single theory appears to adequately explain all observed hydrogen-related phenomena (Gibala and Hehemann, 1984). One theory is that hydrogen interferes with the movement of dislocations, which are imperfections in the atomic lattice that permit inelastic deformations (Bailey, 1994). The lack of a definitive explanation, however, has not precluded the development of good practices that mitigate the occurrence of cracking.

A Sufficient Level of Hydrogen

Hydrogen cracking cannot occur without a sufficient level of hydrogen. Hydrogen can be introduced into the weld pool from the arc. The arc does not create hydrogen but rather breaks down hydrogen-bearing compounds introduced into the arc region. Water and oils are the chief sources of such compounds. Water may be introduced through shielding fluxes, whether they are coatings on the outside of SMAW electrodes or granular fluxes used for SAW. Water may be present on the steel in the form of condensation (including condensation of the combustion byproducts from preheating torches) or moistened scale and rust. Humid atmospheres are also sources of hydrogen. Oils, grease, paint and other materials generally considered contaminants on the steel surface can introduce hydrogen-bearing compounds. Excessive lubricants on the filler metal, whether residual from the manufacturing process or deliberately added, may add hydrogen-bearing compounds into the arc. Finally, although it is rarely the case, hydrogen can be contained within the steel itself, either in the base metal or in the metallic components of the filler metal.

When these compounds are introduced into the arc, the compounds are broken down into their elemental forms, including the release of atomic hydrogen. This hydrogen is readily absorbed into the molten weld pool; during solidification and cooling, much of it is released. As the steel cools further, however, the rate of release decreases, and some hydrogen will be retained in the weld when it reaches room temperature.

A Susceptible HAZ Microstructure

In order for HAZ cracking to occur, the HAZ must have a susceptible microstructure. The HAZ is the narrow region next to the weld metal—the part of the base metal that is heated by welding to a temperature lower than that required to melt the steel. While the chemistry in this region is unchanged, the mechanical properties of the material may be significantly affected, depending on the composition of the steel and the cooling rate experienced by the HAZ. A susceptible microstructure is typically hard and brittle.

To avoid the development of a susceptible microstructure, two approaches can be employed. The first method is to select base metals that are low in carbon and low in alloy content. The carbon content determines the maximum hardness that can be achieved by quenching and alloys determine the material's hardenability, which is defined as that property of a ferrous alloy that determines the depth and distribution of hardness induced by quenching (Stout, 1987). The combined effect of the carbon and alloy content of steel can be mathematically estimated by means of a carbon equivalency (CE) formula that is discussed later in this section.

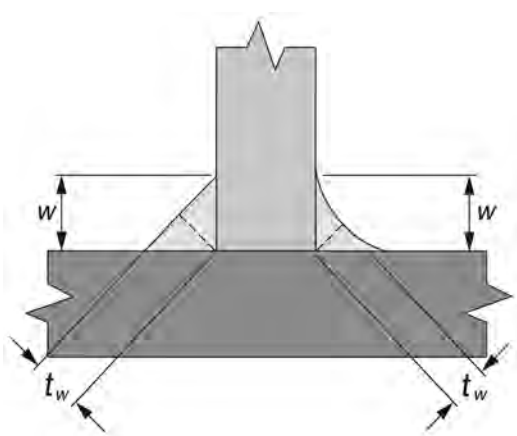

Fig. 6-9. Weld throats and surface profile.

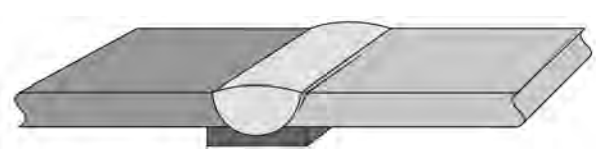

Fig. 6-10. Heat affected zone cracking.

The second means used to avoid the development of a susceptible microstructure is to control the cooling rate of the HAZ. The HAZ will become hot in arc welding, but it need not automatically cool rapidly. Cooling rates are determined by temperature differentials; the greater the difference, the faster the cooling rate, and correspondingly, the greater the possibility of the development of a sensitive HAZ. Cooling rates increase under these conditions:

- Low ambient temperatures
- Low steel temperature (i.e., no or low preheat temperature)
- Low interpass temperature
- Thicker steel sections
- Lower welding heat input levels

The primary means by which cooling rates are reduced is through higher preheat levels. Higher levels of heat input can also be used, but this will normally result in larger weld bead sizes.

Applied or Residual Stress

The final component required for HAZ cracking is stress; either applied or residual. In as-welded assemblies, residual tensile stresses are always present. While residual stresses present immediately after welding cannot be eliminated, they can be reduced. These measures are discussed in Sections 6.6, 6.7 and 6.8 of this Guide.

Limiting Hydrogen

To limit HAZ cracking, the level of retained hydrogen should be minimized. This is best accomplished by not introducing hydrogen-bearing compounds into the arc in the first place. Thus, base metal surfaces should be clean and filler metals should be dry. For SMAW, AWS D1.1, Table 3.2, recommends that low-hydrogen electrodes should be used when welding on steels with a specified minimum yield strength of 50 ksi (345 MPa) or greater. AWS D1.1, clause 5.3.2.2 and Table 5.1, require atmospheric exposure be limited for filler metals that have low-hydrogen coatings to ensure that excessive moisture pickup does not occur. For seismic applications, AWS D1.8, clause 6.4.3, imposes exposure limits on FCAW electrodes (AWS, 2016).

Should excessive hydrogen in weld metal be suspected, a post-heat hydrogen treatment can be applied to reduce the diffusible hydrogen level. Post heat involves heating the weld area to a temperature of 400 to 450°F (200 to 230°C), and holding the assembly at that temperature for one hour for each inch (25 mm) of weld thickness. At this temperature, the mobility of hydrogen increases so that most of the hydrogen will diffuse out of the region. The welded region should not be allowed to cool to room temperature before the post heat is applied.

Because hydrogen-related cracking cannot occur until the steel becomes cool, if a hot, just-made weld is immediately subject to post heat, cracking cannot occur because the assembly is still hot. During the post heat, most of the hydrogen will be released, and when the assembly is allowed to cool to ambient temperature for the first time, cracking will not occur because there is no longer sufficient hydrogen to cause cracking. In addition to diffusing hydrogen, post heat incrementally decreases residual stresses as well.

Limiting Sensitive HAZ

Many measures are contained within AWS D1.1 to limit the development of susceptible microstructures, beginning with the list of steels, whether prequalified or code approved. Ambient welding conditions are controlled, and minimum preheat and interpass temperatures are specified for prequalified WPS as a function of the steel grade and thickness used. The minimum prequalified sizes for fillet weld and PJP groove welds sizes is an indirect means of controlling the heat input (see Sections 3.5.1 and 3.4.2 of this Guide).

A variety of CE formulas have been derived over the years, each developed with the intent of quantifying the weldability of a material and prescribing the conditions, such as preheat, heat input level, and hydrogen level, that must be maintained in order to fabricate such materials without cracking. These formulas are empirically based and the models are only as valid as the range of data that supports it. A model based on high-carbon steels may not apply to low-carbon steels. When a formula is applied outside the bounds of supporting experimental data, the predictions are suspect and may be incorrect.

When the chemical composition of the base metal is known, the CE can be calculated. This number by itself is of limited value. However, the CE number can be used to determine welding conditions that are conducive to crack-free welding, such as minimum preheat temperatures and required maximum diffusible hydrogen limits.

The various equations fit into three general categories. The first category of equations, based on the percentage content of various elements present in the steel, takes on the format of the following:

$$CE = C + Mn/6 + (Cr + Mo + V)/5 + (Ni + Cu)/15 \tag{6-1}$$

This formula was developed many years ago using traditional steels that relied on carbon as a primary strengthening element. It provides good results for steels with carbon contents from 0.18 to 0.30%. While it continues to be commonly applied, it does not necessarily provide good results for steels made with lower carbon contents, as is now commonly the practice for structural steels. Variations on Equation 6-1 exist, but the common element of this group of CE

equations is the use of the carbon content directly and the addition of one-sixth of the manganese content.

The second category of carbon equivalency equations take on this format:

$$P_{cm} = \mathrm{C} + \mathrm{Si}/30 + \mathrm{Mn}/20 + \mathrm{Cu}/20 + \mathrm{Ni}/20 + \mathrm{Cr}/20 + \mathrm{Mo}/15 + \mathrm{V}/10 + 5\mathrm{B} \quad (6\text{-}2)$$

In this formula, the role of carbon receives greater emphasis as compared to the various alloys, except for boron. This formula was developed in Japan for more modern steels with lower carbon contents (<0.12%). If the steel only contains C, Mn, Cr, V, Mo and Cu, the CE formula will generate a lower numerical value than the P_{cm} formula. However, this is a meaningless comparison; the numerical computations are only valid for comparison with the other values calculated using the same formula. What is apparent from the P_{cm} formula is that carbon is given more relative significance than the various alloys (except boron), which explains the preference for this equation when low-carbon steels are used.

The third category includes one equation developed with the goal of combining the previous two types of equations (Yurioka and Suzuki, 1990). Unlike the other equations, this approach accounts for the nonlinear behavior that better matches empirical data, as follows:

$$\mathrm{CE}_N = \mathrm{C} + A(\mathrm{C})\left[\mathrm{Si}/4 + \mathrm{Mn}/6 + \mathrm{Cu}/15 + \mathrm{Ni}/20 + (\mathrm{Cr} + \mathrm{Mo} + \mathrm{Nb} + \mathrm{V})/15 + 5\mathrm{B}\right] \quad (6\text{-}3)$$

where

$$A(\mathrm{C}) = 0.75 + 0.25\tanh\left[20(\mathrm{C} - 0.12)\right] \quad (6\text{-}4)$$

This model has the advantage of being suitable for a wider range of steel compositions, particularly in terms of carbon content, than is possible with other approaches.

Limits on such values may assist in procuring materials with better weldability, and data from various steels can be compared when such data is available. These models all suggest that, all else being equal, a lower value should result in a HAZ that is more resistant to hydrogen cracking. There is no magic number that will guarantee freedom from cracking.

Limiting Stress

Cracking tendencies can be mitigated by reducing the residual stress. Techniques to control residual stress are covered in Sections 6.5, 6.6 and 6.7 of this Guide.

6.3.3 Transverse Cracking

Transverse cracking, also called cross cracking, is characterized as a crack within the weld metal perpendicular to the direction of travel, as shown in Figure 6-11. This type of cracking includes chevron cracking, where the cracks occur at a 45° orientation to the weld surface but the surface indication is still perpendicular to the weld axis. Transverse cracking may be the least frequently encountered type of cracking and is generally associated with high-strength weld metal that overmatches the base material. Transverse cracking is another form of cold cracking and, like HAZ cracking, is driven by the same three factors—excessive hydrogen, a susceptible microstructure, and applied or residual stress.

Hydrogen

The sources of hydrogen for transverse cracking are no different than those already identified for HAZ cracking. A feature associated with transverse cracking is that multiple-pass welds are often involved, and the thicknesses of steel involved are typically over 2 in. (50 mm). As has been mentioned, hydrogen begins to diffuse out of welds as soon as weld metal is deposited. In the case of multiple-pass welds, if the time between weld passes is short, the hydrogen diffusing from the previous deposit finds a new layer of metal (the next weld pass) through which it must diffuse. Accordingly, hydrogen contents can increase when individual weld passes in multiple-pass welds are rapidly deposited on top of each other. This may occur in applications like beam flange-to-column flange welds that are short in length.

Reducing the hydrogen content in the deposited weld metal is a key method to overcome this type of cracking. This can be accomplished by selecting the proper filler metal and controlling exposure of the filler metal, interpass temperature, and time between weld passes. The weld pass size is another factor. Normally, high heat-input levels are desirable for resisting cold cracking tendencies because they encourage slow cooling. In the case of transverse cracking, those benefits are offset by the greater distance (i.e., the weld thickness) through which the hydrogen must diffuse. Thus, within limits, thinner weld beads are helpful. However, extremely small weld beads are associated with low heat-input welding and, correspondingly, faster cooling rates, which may offset the benefits of smaller hydrogen diffusion paths. Extra preheat and higher interpass temperatures are also helpful.

Susceptible Material

In the case of transverse cracking, the susceptible material is the weld metal itself. For most steel applications, the

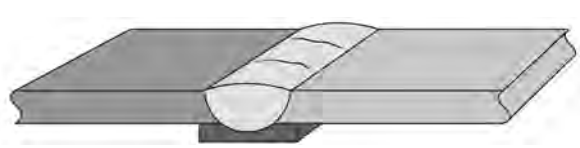

Fig. 6-11. Transverse cracking.

hardenability of the base metal will be greater than that of the weld metal because the base metal typically has a higher carbon content. Thus, the more common form of hydrogen-related cracking is HAZ cracking, as discussed in Section 6.3.2 of this Guide. HAZ cracking is more common in most steels with actual yield strengths (versus specified minimum yield strengths) of less than about 85 ksi (590 MPa) (Bailey, 1994).

When transverse cracking occurs, the weld metal is usually higher in strength than the base metal. This is often due to the selection of an improper (overmatching) filler metal. In other cases, the high weld metal strength is due to low levels of preheat; such low preheat levels may have been predicted by improperly using a CE equation like the one shown in Equation 6-1 with low-carbon steels. Even when base metal preheat levels are properly established to eliminate underbead cracking, additional preheat may be required to overcome transverse cracking tendencies. Regardless of the cause or causes, when transverse cracking occurs, the actual deposited weld metal strength is greater than the actual base metal strength.

Residual Stress

The residual stress that causes transverse cracking is due to the longitudinal shrinkage of the weld. A long weld—greater than about 12 in. (300 mm)—is generally necessary to develop sufficient longitudinal stress to cause this type of cracking. As the weld shrinks longitudinally, the surrounding base material resists this shrinking force. The strength of the surrounding steel in compression restricts the ability of the weld material to shrink. When the weld material is high in strength, it has a reduced capacity to plastically deform, and the weld metal may crack in the transverse direction.

Solutions

When transverse cracking is encountered, the strength of the actual weld metal deposit should also be reviewed. Emphasis is placed upon the actual weld metal deposit because the filler metal may deposit lower-strength, more ductile metal under normal conditions. However, with the influence of alloy pickup and welding procedures that encourage rapid cooling rates (e.g., small weld passes made with low heat-input levels), it is possible for the weld metal to exhibit higher strength with reduced ductility. Using lower-strength weld metal is an effective solution, but caution should be taken to ensure that the required joint strength is attained.

For fillet welds and PJP groove welds where the use of undermatching strength filler metal is permitted, lower-strength filler metal is a commonly applied solution to overcome transverse cracking. The common application of this concept is the web-to-flange weld of girders made with high-strength steel such as ASTM A514. Filler metals with 70-ksi (485 MPa) tensile strength are routinely used to make this connection that is subject to shear.

Increased preheat will alleviate transverse cracking by assisting in diffusing the excessive hydrogen. In some cases, preheat may expand the length of the weld joint, allowing the weld metal and the joint to contract simultaneously and reducing the strains applied to the shrinking weld. This is particularly important when making circumferential welds. When the circumference of the materials being welded is expanded, the weld metal is free to contract along with the surrounding base material, reducing the longitudinal shrinkage stress. Finally, post-weld hydrogen release treatments that involve holding the steel at 400 to 450°F (200 to 230°C) for extended times will assist in diffusing residual hydrogen.

6.4 LAMELLAR TEARING

Lamellar tearing is a welding-related type of cracking that can occur in the base metal. It is caused by welding shrinkage strains acting perpendicular to planes of weakness in the steel and the tearing typically occurs slightly outside the HAZ. These areas of weakness are the result of inclusions in the base metal that have been flattened into thin, oval-shaped discontinuities that are roughly parallel to the surface of the steel; when strained, they separate. Because the various individual inclusions are on different planes, the resulting fracture moves from one plane of inclusions to another, resulting in the stair-stepped pattern of fractures illustrated in Figure 6-12. Lamellar tearing may or may not extend to the surface of the steel. Ultrasonic testing is a good method for detecting non-surface-breaking lamellar tearing.

Lamellar tearing is associated with corner and T-joints where the weld shrinkage strains act perpendicular to the inclusions that lie parallel to the surface of the steel. Lamellar tearing is more frequently associated with thicker steel sections. While there is no distinct thickness below which a guarantee can be made that lamellar tearing cannot occur, AWS D1.1, clause 2.7.3, advises that the concerns increase,

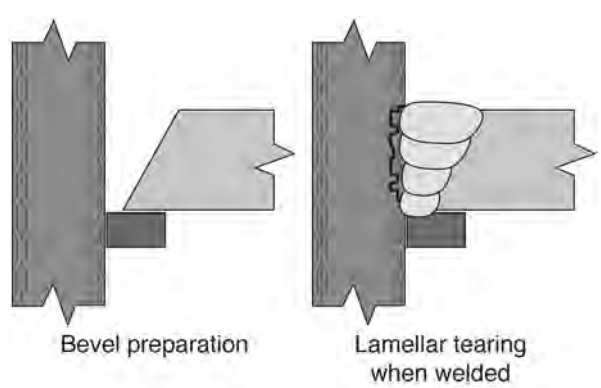

Fig. 6-12. Lamellar tearing.

"…especially when the base metal thickness of the branch member or the required weld size is ¾ in. (19 mm) or greater…." Lamellar tearing is also associated with reduced through-thickness ductility levels, typically measured in terms of reduction-in-area (RA), where higher values represent better ductility and reduced tearing tendencies. Twenty percent RA has been used as a general minimum level of ductility that is needed to resist lamellar tearing tendencies (Barsom and Korvink, 1997).

Unlike hydrogen-related cracking which is typically delayed, lamellar tearing usually occurs while the weld is cooling and shrinking. Furthermore, hydrogen cracking is cold cracking while lamellar tearing may start at temperatures over 500°F (260°C), a temperature that is higher than where hydrogen cracking can occur (Bailey, 1994). In other cases, however, lamellar tearing may occur well after the weld has solidified and cooled due to additional shrinkage stresses that result from welding on another part of the assembly.

Lamellar tearing tendencies are most closely related to the number of inclusions, the form of the inclusions (i.e., their shape), and their distribution. The type (composition) is less important, although the composition will directly affect the inclusion form (Bailey, 1994). Manganese sulfides (MnS) are more deformable than sulfides combined with calcium, and this in turn affects the resulting shape; calcium-treated steel will have inclusions with a more desirable shape. The degree of rolling will affect inclusion shape; increased rolling flattens the inclusions more, making the steel more susceptible to lamellar tearing.

The term *lamellar tearing* is an accurate description because, on a local basis, the behavior is ductile and the material between the inclusions tears as opposed to cracks. A two-stage process is involved—first, the nonmetallic inclusions open and then the ligaments between the inclusions tear.

Several approaches can be taken to overcome lamellar tearing. The first variable is the steel itself. Lower levels of inclusions within the steel will help mitigate this tendency. This generally means lower sulfur levels, although the characteristics of the sulfide inclusion are also important. Current steel-making practices have helped to minimize lamellar tearing tendencies. With continuously cast steel, the degree of rolling after casting is diminished. The reduction in the amount of rolling has directly affected the degree to which these laminations are flattened and has correspondingly reduced lamellar tearing tendencies. The second variable involves the weld joint design. It is often possible to modify a specific weld joint detail to minimize lamellar tearing tendencies. For example, on corner joints it is preferred to bevel the member in which lamellar tearing would be expected—that is, the plate that will be strained in the through-thickness direction. This is illustrated in Figure 6-13.

General provisions to reduce both shrinkage stresses and restraint are covered in Sections 6.5 and 6.6 of this Guide and are applicable to lamellar tearing situations. Increased preheat, helpful in mitigating some cracking tendencies, may aggravate lamellar tearing tendencies in some situations. Because most preheat on structural assemblies will be localized around the joint, extra expansion and contraction can be introduced by preheating, further straining the steel in the through-thickness direction. However, heating the entire area can help mitigate lamellar tearing in other situations.

The buttering layer technique can be used to overcome lamellar tearing tendencies (see Section 14.16 of this Guide). With this approach, a pad of sound, low-strength weld metal is deposited on the surface of the steel where there might be a risk of lamellar tearing (see Section 14.16 of this Guide). Because the buttering welds are simply weld beads on the surface and are not constrained by being attached to a second member, the butter welds solidify, cool and shrink, inducing a minimum level of residual stress to the material on which they are placed. After the buttering layer is in place, it is possible to weld upon the pad with less concern of lamellar tearing. This concept is illustrated in Figure 6-14.

Lamellar tearing tendencies may be aggravated by the presence of hydrogen (although not caused by hydrogen); when such tendencies are encountered, it is important to review low-hydrogen practice, examining the selection and care of electrodes.

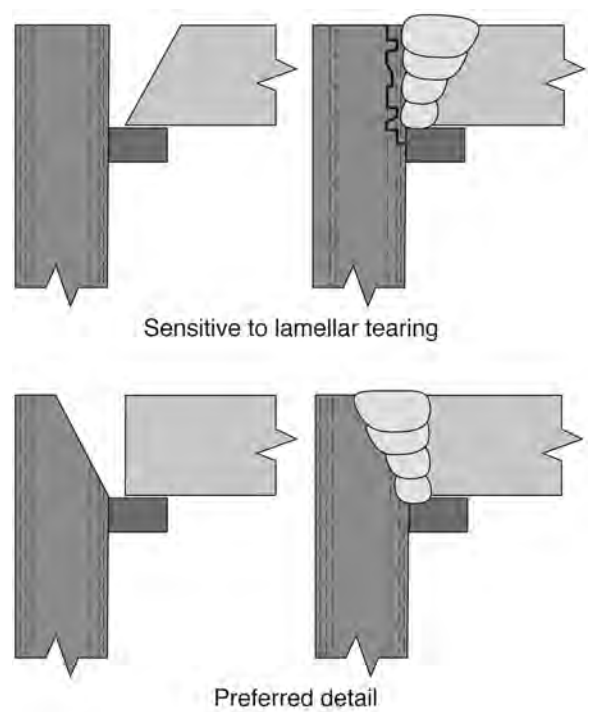

Fig. 6-13. Effect of joint details on lamellar tearing.

6.5 REDUCING SHRINKAGE STRESSES

All the previously discussed forms of weld cracking as well as lamellar tearing are driven by the stresses associated with shrinkage of the hot weld and base metal. Various techniques can be used to minimize these stresses, including the following:

- Specify the smallest weld size possible consistent with design requirements as this will reduce the shrinkage stress. However, if cold cracking is involved (underbead cracking, transverse cracking), increased heat input resulting in larger weld sizes is generally helpful.
- For a given weld size, select details that will require the least amount of weld metal.
- Control fit-up. Excessive gaps increase the required weld metal, which increases shrinkage.
- Do not make welds that are larger than necessary.
- Limit weld reinforcement. Reinforcement causes shrinkage stresses, just like any other weld metal.
- For a given weld size, make the weld in the fewest number of passes. Use larger beads, not small stringer passes.
- For double-sided joints requiring backgouging, limit the backgouging to only that which is required. The extra metal required to fill the joint will create more shrinkage stresses.
- Employ welding procedures that, for a given size of weld pass, use the lowest heat input levels, which will reduce the shrinkage stress. However, if cold cracking is involved (HAZ cracking, transverse cracking), higher heat input is generally helpful.
- Use filler metal with the lowest strength level possible consistent with design requirements; this is especially important to control transverse cracking.

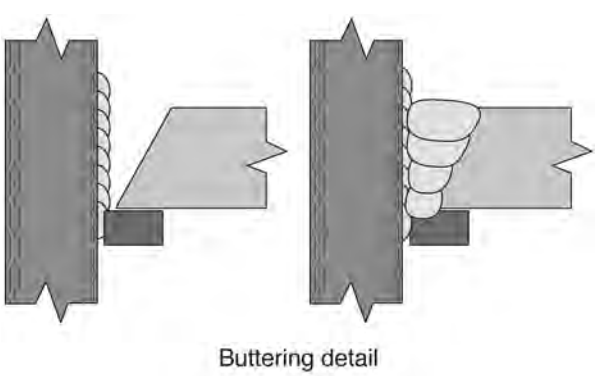

Fig. 6-14. Buttering to mitigate lamellar tearing.

- In general, but not always, use higher levels of preheat and heat a greater volume of weld metal, except when such preheating changes the shape of the parts being joined or adds to the residual stresses in a member.
- Limit penetration unless there is a specific advantage or reason to maintain a certain level of penetration.
- Complete highly restrained weldments without interruption. This may require around-the-clock welding in some situations.
- When around-the-clock welding is impossible or impractical, maintain around-the-clock interpass temperature control, keeping the partially welded assembly at welding temperatures at all times until the welding is complete.
- Plan the welding to ensure the assembly will need to be welded only once (i.e., eliminate the need for weld repairs).

6.6 REDUCING RESTRAINT

As has been discussed, if hot weld and base metal were free to shrink without restraint, there would be no residual stresses. Reducing restraint is another option available to reduce cracking and lamellar tearing tendencies; ways to do this include the following:

- When possible, fabricate small subassemblies, and then join subassemblies into the final assembly (as opposed to fitting all the pieces together first, and welding the entire assembly).
- Weld components expected to have the greatest shrinkage first, then weld the members anticipated to shrink less.
- Weld the most rigid components first, saving the more flexible components for welding later.
- When possible, sequence the welding of various joints so that the shrinkage movement of the parts is all toward a relatively fixed central location.
- For individual joints, balance shrinkage on opposite sides of the member, when possible.
- Tightly fitted joints, particularly machined parts, are quite rigid, and welds placed in such joints are crack-sensitive. Slight gaps of 1⁄16 to 1⁄8 in. (2 to 3 mm) help accommodate shrinkage. Soft steel spacer wires in between members can help in this regard; the spacer wire establishes a gap between the elements, and as the weld shrinks, the wire compresses, accommodating the volumetric shrinkage of the weld metal.
- Increasing preheat temperatures and increasing the volume of preheated material can sometimes assist, particularly when transverse cracking is being

experienced, and the joint can be expanded thermally before welding.

- Preset members before welding and allow them to move during welding.

6.7 POST-WELDING STRESS REDUCTION MEASURES

As-deposited welds always have residual stresses, but post-welding operations can reduce such stresses. The most commonly applied method is thermal stress relief. For carbon steel and most low-alloy steels, this typically involves heating the welded assembly to 1,100 to 1,200°F (600 to 650°C), and holding the assembly at that temperature an hour for each inch (25 mm) of thickness. Properly applied, thermal stress relief can reduce residual stresses by approximately 90%.

Heating the weldment to stress relieving temperatures means the material will automatically be heated to the 400 to 450°F (210 to 240°C) range needed for a post heat or hydrogen release soaking. In some cases, the elimination of cracking when assemblies are stress relieved may be achieved by reducing the hydrogen content rather than reducing residual stresses. Stress relief operations should not be approached casually. Both the steel and the weld metal must be suitable for stress relief. A form of cracking called reheat cracking can occur during stress relief, and steels alloyed with chromium, molybdenum, vanadium and boron are sensitive to this phenomenon. These alloys are found in many structural steel grades. While weld metal properties may be negatively affected by thermal stress relief, for some alloys, the properties improve significantly. Thus, knowledge of the behavior of the materials involved is important, and these factors should be considered before stress relief is specified or applied (Bailey, 1994).

Peening can also be used to reduce residual stresses. When this technique is employed, peening is applied to the intermittent layers of groove welds and thus may not actually be a post-weld stress reduction measure. Peening involves mechanically deforming the weld surface; inducing compressive residual stresses that offset the residual tensile stresses. Peening is a powerful tool when used properly; unfortunately, peening is often done improperly. To be effective, the weld metal must be warm [above 150°F (65°C)] but not hot [less than 500°F (260°C)]. The peening must result in mechanical deformation of the surface and is ideally done with a round, blunted tool that does not gouge the surface. The depressions created by peening should overlap and create a surface that is all mechanically deformed. Because of the potential for abuse and because other methods are available, peening is not typically used for structural steel welding applications. Peening is covered in AWS D1.1, clause 5.26.

Stress relief is not generally an effective means of mitigating cracking tendencies for structural applications; if cracking is going to occur, it will likely occur before any stress relief can be applied. However, if a part can be stress relieved before it is allowed to cool below the welding preheat temperature, it can be a powerful tool in overcoming cracking tendencies. The residual stresses will be relieved, and simultaneously, any excessive hydrogen is also released.

Residential building with braced exoskeleton located along New York's High Line elevated park.

Chapter 7
Distortion

7.1 INTRODUCTION

Distortion is the geometric deviation in the shape of a part or an assembly that is observable after welding is complete. Distortion may be a cosmetic issue, such as can be observed on fascia girders with stiffeners applied to the opposite side. In other situations, distortion may make it difficult or impossible to assemble parts into a larger assembly. Under extreme conditions, distortion can reduce the buckling strength of compression members or create other structural or serviceability problems.

As shown in Figure 7-1, distortion may assume various forms, including angular distortion, longitudinal shortening, transverse shrinkage, twisting, warping and buckling, and longitudinal sweep or camber. Distortion is caused by the volumetric contraction of hot, expanded metal—the length, width and depth (thickness) of the heated metal all shrink. The type of distortion experienced depends on the geometric shrinkage involved and how that shrinkage interacts with the surrounding steel.

The shrinkage of the hot, expanded metal causes permanent distortion, as well as causing the part to flex elastically. The permanent distortion can be called the plastic distortion and the elastic movement called the elastic distortion. Figure 7-2 demonstrates the concept of elastic distortion. If a piece of steel is tack welded to a rigid part, and the longitudinal weld is made on the top of the piece, then the part will be restricted from distortion. When the tack welds are ground off, however, the elastic portion of the distortion will cause some spring-back that is all elastic. If the bar is depressed, it will return to a flat configuration, but when the force is removed, the elastic distortion returns. In this situation, there is no plastic distortion, only elastic.

AWS D1.1, clause 5, defines acceptable limits for some forms of distortion.

7.2 CAUSES OF DISTORTION

Distortion is caused by four factors as follows:

- Hot, expanded weld metal has solidified and shrinks as it cools from elevated temperatures.
- A portion of the base metal is heated by welding, then expands, upsets and cools from elevated temperatures.
- The shrinkage, or straining, creates stresses that act on the surrounding steel.
- Flexible surrounding steel moves to accommodate the stresses created by the shrinking metal.

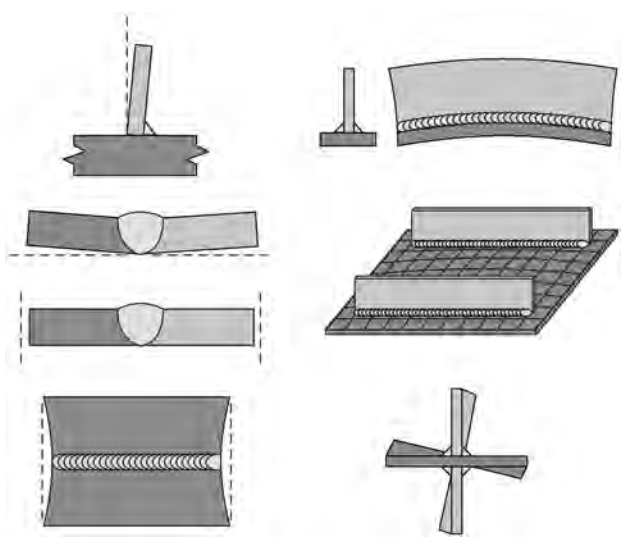

Fig. 7-1. Examples of distortion.

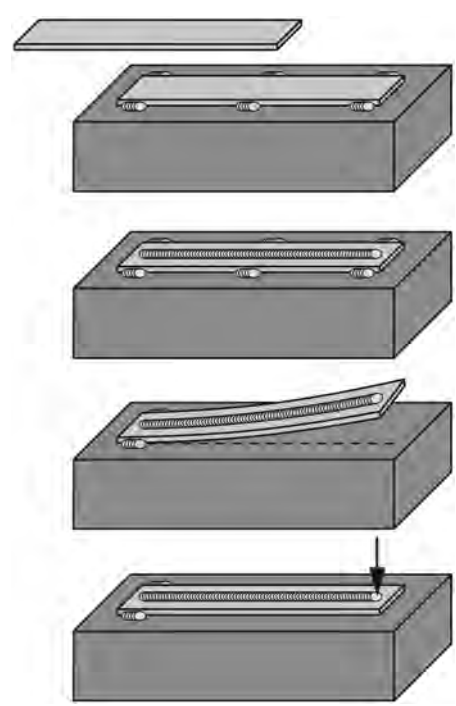

Fig. 7-2. Elastic versus plastic distortion.

The first listed factor involves the weld metal itself. Weld metal is deposited in a joint in a liquid form that nearly immediately transforms to a solid. While there is a volumetric contraction associated with this transformation, this change in shape is not the cause of distortion; at the elevated temperatures at which solidification occurs, the modulus of elasticity is so low that virtually no stress is created by this contraction. It is the solid, but hot, weld metal that shrinks as it cools from elevated temperatures that causes distortion.

The second factor is the heated and upset base metal. The contribution of the base metal differs from that of the weld metal in two important ways: First, the base metal is initially cool and is expanded by the heat welding. Second, the base metal must upset (or deform) during heating in order to contribute to the distortion. Heated metal that simply expands and then contracts during cooling does not contribute to distortion. If during heating, however, the expansion of metal is restricted by the surrounding colder and more rigid steel, the hot metal may upset, yield and deform, assuming a different shape. Then, upon cooling, the distorted metal will shrink, imposing the corresponding shrinkage stresses on the surrounding steel.

The third factor is that the shrinkage strains must create stresses. At elevated temperatures, this does not occur for the aforementioned reasons. However, as the steel cools, and as the strength and modulus increases, the shrinkage strains create stresses.

The final factor involves the resistance to stresses created by the shrinking weld and base metal, or more accurately, the lack of resistance that is offered by the surrounding steel. Thick, stiff and restrained assemblies are unlikely to distort, but thin, flexible and unrestrained assemblies will. To limit distortion, temporary restraint can be introduced in the form of strongbacks and welding fixtures.

A variety of empirical equations have been derived to predict distortion and several are presented in the following section. Given the many factors that influence distortion (listed in Section 7.3 of this Guide), most derived equations compromise accuracy for simplicity. Sophisticated finite-element-based distortion models have been developed that more accurately predict distortion. To be useful, such models require extensive modeling input and a good understanding of the details of the welding procedures that will be used. For typical structural applications, such tools are of limited practical use at this time.

7.3 DISTORTION CONTROL

7.3.1 General

The type of distortion will determine what techniques are applicable to limit distortion. Some control methods are applicable to all forms of distortion and are discussed in this section, while other methods are uniquely appropriate for only certain types of distortion; those methods are discussed in Section 7.4 of this Guide.

Distortion control principles can be placed into the following five broad categories:

- Measures that decrease the shrinkage forces
- Placement of welds at locations where the shrinkage does not matter
- Approaches that increase the resistance to the shrinkage forces
- Techniques that counterbalance shrinkage forces
- After welding procedures that reduce shrinkage forces

Decreasing the shrinkage force usually means reducing the volume of localized expanded metal. This may involve any of the following: reduction in the volume of weld metal, reduction in the volume of heated base metal around the weld, or increasing the volume of heated metal away from the weld joint (thereby reducing the localized nature of the hot weld zone). Weld metal volume can be reduced by the following measures:

- Specify the smallest weld size possible, consistent with design requirements.
- When appropriate, use intermittent welds.
- For a given weld size, select details that will require the least amount of weld metal.
- Make a multiple-pass weld of a given size with the fewest number of weld passes.
- Control fit-up. Excessive gaps require more weld metal, increasing shrinkage.
- Do not make welds larger than necessary.
- Limit weld reinforcement.
- For double-sided joints requiring backgouging, limit the backgouging to only that which is required.
- Unless there is a specific advantage or reason for not doing so, limit weld penetration.

Specifying welds of the proper size is essential for controlling distortion. Fortunately, many of the methods for obtaining economical welded connections (see Chapter 17 of this Guide) reduce the volume of shrinking weld metal, and simultaneously reduce distortion.

The localized nature of the hot metal may be mitigated, in some cases, by heating a greater volume of metal, exceeding the minimum amount of material that would be required for the preheat needed to control only cracking tendencies. In other situations, however, such efforts may actually increase the distortion. For small assemblies, it may be possible to heat the whole part, not just the region surrounding the joint. This can reduce distortion if the heating and cooling of the assembly is controlled. However, for most structural

applications, this is not possible given the size of the associated parts.

For multiple-pass welds, it is better to make the weld in the fewest possible number of passes. This reduces the number of heating and cooling cycles to which the member will be subjected. A few large weld beads will cause less distortion than will many small stringer passes, for example.

Distortion can be mitigated by drawing thermal energy out of the part. For example, copper chill bars can be placed near the weld joint and are effective in drawing the thermal energy out of the joint, provided the chill bars are kept cool. Chill bars may be made with internal water passages, enabling them to be water-cooled. However, water-cooled bars should be warm, not cold, so that condensation does not develop on the surface and add water to the weld joint. Water and compressed air should not be used to draw thermal energy from the weld joint, but fans may be used to accelerate cooling.

7.3.2 Angular Distortion

Angular distortion is caused by the transverse shrinkage of the weld. When the hot metal contracts laterally, it pulls flexible members toward the weld as shown in Figure 7-3. Angular distortion can be caused by groove or fillet welds and can occur in any joint type.

In some cases, angular distortion can be offset by using double-sided welds instead of single-sided welds as shown in Figure 7-4(a). This is often done with butt joints, where the distortion caused by welding on the first side is offset by welding on the second side, as shown in Figure 7-4(b). The first welds are made when the assembly is more flexible, so the distortion associated with the first side weld is typically greater than that from the second side. To compensate for this, the two sides of the double-sided welds can be prepared with different depths, with the more shallow prepared side welded first, as shown in Figure 7-4(c). In this example, the smaller groove weld is made first, allowing the larger groove weld on the other side to offset the greater rigidity that would be experienced after the first weld is in place. Alternatively, members can be preset to minimize distortion, as shown in Figure 7-4(d). It should be noted that double-sided welds do not always eliminate all forms of angular distortion. For example, in Figure 7-3, the double-sided fillet welds still cause the horizontal member to angularly distort.

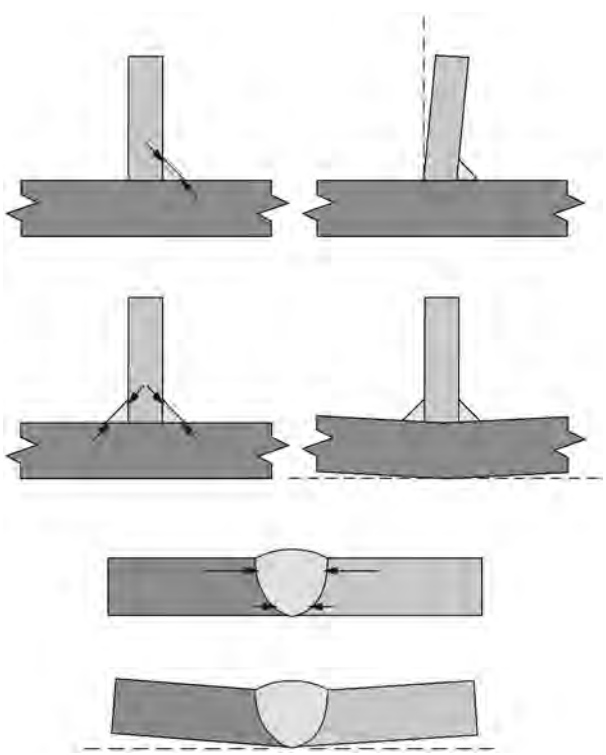

Fig. 7-3. Angular distortion.

A simplified formula to predict distortion is as follows (Blodgett, 1966):

$$\Delta_{angular} = \frac{0.02Ww^{1.3}}{t^2} \tag{7-1}$$

$$\Delta_{angular} = \frac{0.19Ww^{1.3}}{t^2} \tag{7-1M}$$

where

W = width of the flange, in. (mm)

t = thickness of the flange, in. (mm)

w = fillet weld size, in. (mm)

$\Delta_{angular}$ = deflection, measured at the tips of the flanges, in. (mm)

7.3.3 Transverse Shrinkage

As the weld contracts in width, it will cause transverse shrinkage when the edges of the parts being welded are free to move as shown in Figure 7-5. This type of shrinkage is normally negligible, unless a series of parallel welds cause such shrinkage to accumulate to a significant dimension. This may occur when a series of chord splices are made on a long truss, in which case this shrinkage cannot be ignored.

The change in width of the member in the transverse direction, $\Delta_{transverse}$, is directly related to the volume of shrinking weld metal and can be estimated from the following:

$$\Delta_{transverse} = \frac{0.10A_w}{t} \tag{7-2}$$

where

A_w = cross-sectional area of the weld metal, in.^{2} (mm^2)

t = thickness of the members joined, in. (mm)

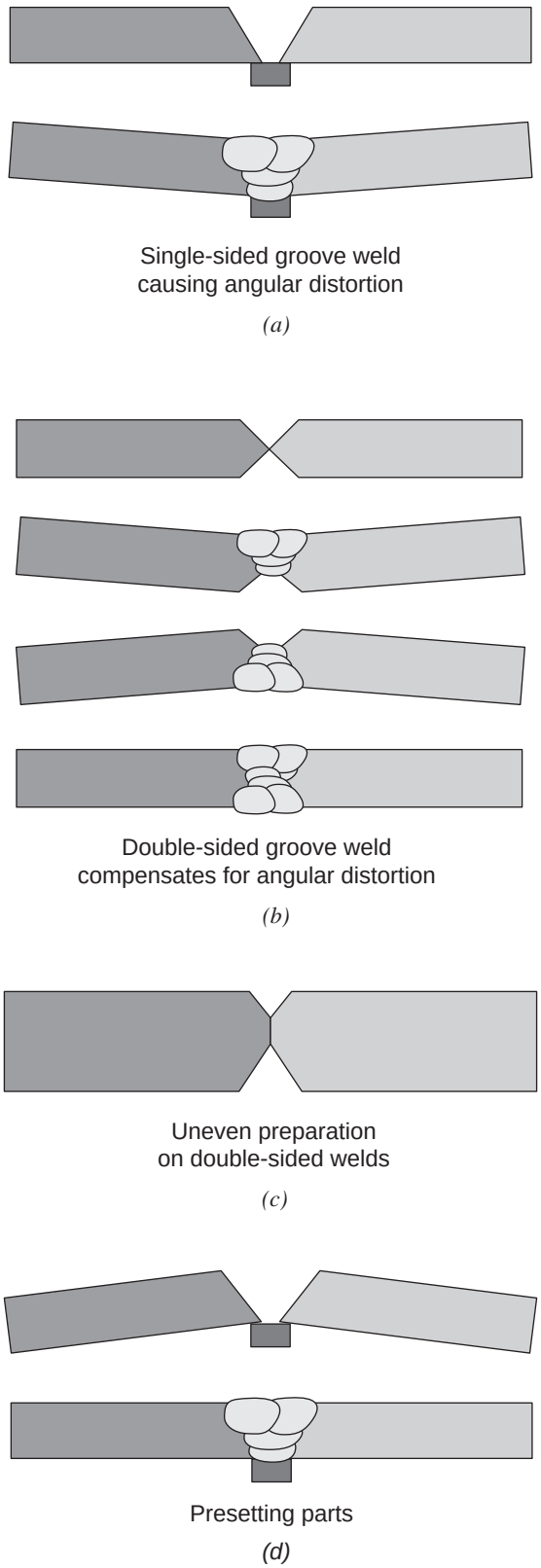

Fig. 7-4. Techniques to limit angular distortion.

The preceding relationship suggests that the transverse shrinkage is 10% of the average width of the weld.

Restraint is a factor that will affect the amount of transverse shrinkage that will be experienced. The aforementioned relationship assumes that there is no unusual restraint against shrinkage.

For weldments where transverse shrinkage is a concern, it is sometimes possible to deliberately set the joint wider than necessary and allow the transverse shrinkage to occur. For example, if the joint is expected to shrink 0.10 in. (2.5 mm), then the root opening can be increased by this amount. After welding, the overall width of the part should be acceptable.

7.3.4 Longitudinal Shortening

Longitudinal shrinkage of the weld will cause the assembly to shorten, as shown in Figure 7-6. The same shrinkage may result in twisting, longitudinal sweep or camber, or buckling and warping, which are discussed in the next three subsections. Longitudinal shortening is typically negligible, unless

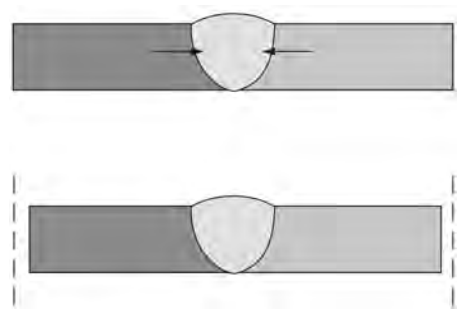

Fig. 7-5. Transverse shrinkage.

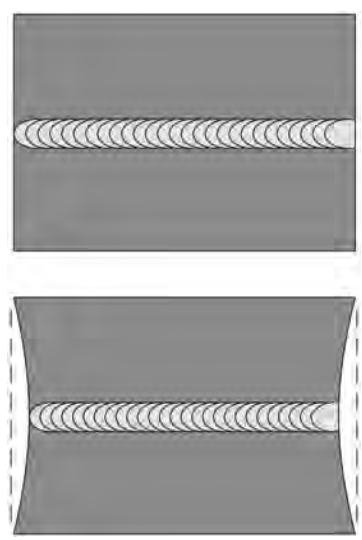

Fig. 7-6. Longitudinal shortening.

the weldment is required to be held to unusually tight dimensions or the member is very long. Many weldments, including plate girders and fabricated column sections, fall into the latter category.

The effects of longitudinal shortening are difficult to predict. Bridge fabricators making long plate girders often compensate for this shrinkage by making girders longer than necessary and cutting the final assembly to length.

7.3.5 Twisting

Longitudinal shrinkage causes the weld region to shrink, while the outside steel remains unchanged in length. If the shrinkage stresses are large, and if the assembly has little resistance to twisting (as is the case for open shapes such as the cruciform shown in Figure 7-7), the shrinkage can cause a longitudinal twisting of the assembly. Such twisting does not occur in closed sections such as boxes where the torsional resistance is much higher.

Deep plate girders made with thin web members may similarly twist, resulting in members that look severely deformed when the girder is hung from a crane. Yet, the dead weight of the same girder may allow it to lie flat when laid down. If this is the case, the distortion is caused by stresses that are at a level that is less than the yield stress, that is, these deformations are elastic. While such twisting may cause some erection difficulties, if it can be assembled, the serviceability of the member should not be impaired.

In addition to all of the standard methods used to reduce shrinkage stresses, a powerful means to minimize twisting is to increase the torsional resistance of the section. For example, I-shaped plate girders with open cross sections will experience such twisting under some circumstances, but box sections with enclosed cross sections will not.

7.3.6 Longitudinal Sweep or Camber

Longitudinal shrinkage of the weld or groups of welds used to make long, built-up members may cause a curvature in the longitudinal direction. Depending on the relationship of the center of gravity (CG) of the welds and the neutral axis (NA) of the section, the deviation may form a negative or positive camber (e.g., deviation in the vertical plane), or a horizontal sweep to the left or right (e.g., deviation in the horizontal plane). Figure 7-8 illustrates welds that have resulted in a positive (upward) camber.

When the CG of the welds about the *x-x* axis is above the NA of the section, a negative camber is expected. When the CG of the welds about the *y-y* axis is to the left of the NA of the section, a sweep to the left is expected.

The following relationship may be used to calculate the maximum deviation of the piece from the original work line, $\Delta_{longitudinal}$, to predict longitudinal sweep or camber:

$$\Delta_{longitudinal} = \frac{0.005 A_w L^2 d}{I} \tag{7-3}$$

where

A_w = cross-sectional area of the weld metal, in.^{2} (mm^2)

I = moment of inertia for the section, in.^{4} (mm^4)

L = length of weld, in. (mm)

d = distance from the center of gravity of the various welds and the neutral axis of the section, in. (mm)

Experience and experimentation has shown that Equation 7-3 will predict the actual sweep or camber to an accuracy of about ± 20%.

7.3.7 Buckling and Warping

Longitudinal shrinkage may cause thin base metal to buckle or warp. This occurs because thin base metal has little resistance to compression. Buckling can be experienced in plate girder panels between stiffeners, as illustrated in Figure 7-9. Buckled welded assemblies usually contain elements of angular distortion as well. Warping is associated with one free edge.

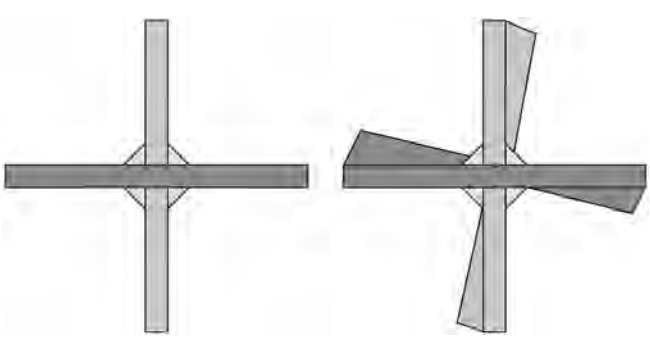

Fig. 7-7. Twisting.

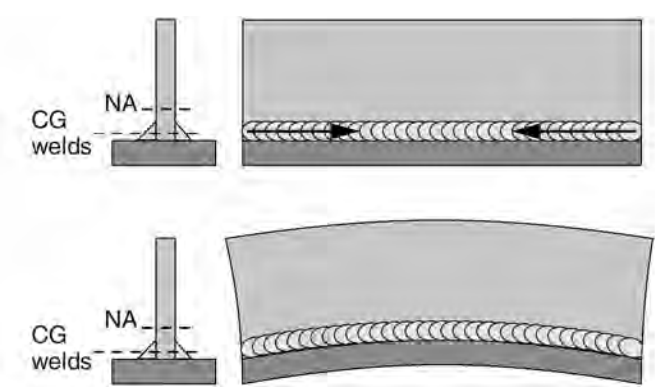

Fig. 7-8. Longitudinal camber.

As would be expected, the tendency toward these forms of distortion depends on the critical buckling stress associated with the localized section. Such buckling resistance significantly increases with increases in thickness and similarly decreases with increased lengths. For applications where control of buckling and warping is critical, using slightly thicker members is quite helpful. Even small levels of buckling distortion can be visually disconcerting, particularly when light colored, glossy paint is applied. Slight waviness can cast shadows that accent minor changes to the flatness of panels. Heat shrinking can be used to shrink the excess metal out of the distorted panels (see Section 14.15 of this Guide).

7.3.8 Rotational Distortion

Rotational distortion is caused by transverse shrinkage and is typically associated with thinner members that are relatively narrow compared to their length. Rotational distortion also occurs with electroslag welding. With rotational distortion, the joint can either open during welding or close tight (or, in the case of a thin member, overlap on top of each other) as shown in Figure 7-10. The speed of welding and the heat input determines whether the joint opens or closes; when high travel speeds are used, the joint tends to close, whereas for slower travel speeds, it tends to open. At issue is the rate of thermal conductivity as compared to the rate at which the shrinking weld metal advances with respect to the joint.

Rotational distortion can be mitigated by clamping the members rigidly to increase the restraint against rotation. As shown in Figure 7-11(a), tack welds are helpful in keeping the joint from opening or closing. Sometimes, the part can be preset as shown in Figure 7-11(b), particularly if the tendency is for the joint to close as welding progresses. Finally, a backstepping technique can be used, as shown in Figures 7-11(c) to 7-11(j). Both ends of the joint are first tacked. Then, a small length of weld is made, approximately 1 in. (25 mm) long, on the right end of the joint, with welding travel direction from left to right. Next, another small length of weld is made, from left to right, and ending at the starting point of the previously made weld segment. The process continues until the joint is completely welded.

While the backstepping technique can be successful in overcoming rotational distortion, it provides little or no assistance in minimizing other types of distortion. Some welders who know of the power of this approach with respect to overcoming rotational distortion are prone to apply the technique in situations where it offers no advantage. Moreover, because the backstepping technique is typically a slower method of making the weld, it may actually increase distortion.

7.3.9 Distortion Tolerances

AISC Code of Standard Practice

The AISC *Code of Standard Practice* provides distortion-related tolerances for welded assemblies. The specified tolerances include the following:

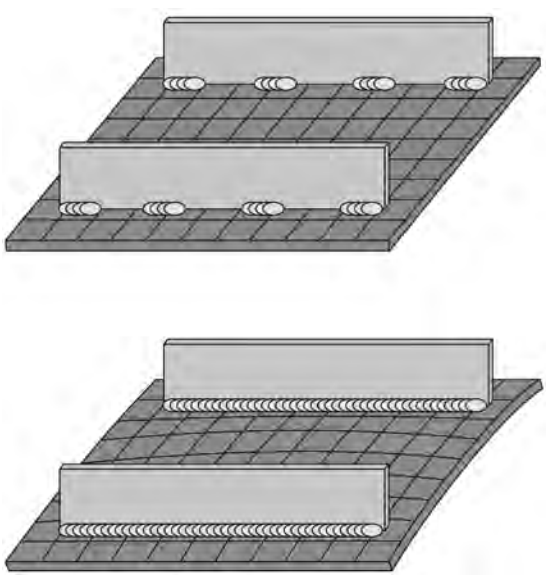

Fig. 7-9. Warping and buckling.

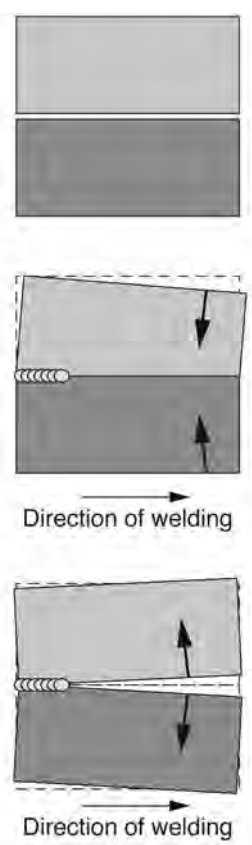

Fig. 7-10. Rotational distortion.

- Straightness of straight structural members [Section 6.4.2(a)]
- Straightness of curved structural members [Section 6.4.2(b)]
- Camber tolerances for beams (Section 6.4.4)
- Camber tolerances for trusses (Section 6.4.5)

Allowable twist of box members is not addressed in the AISC *Code*. Also see comments on twist of box sections as discussed under AWS D1.1 tolerances.

AWS D1.1

AWS D1.1 provides distortion related tolerances for welded assemblies. The specified tolerances include the following:

- Straightness of columns and trusses (clause 5.22.1)
- Straightness of beams and girders with no specified camber (clause 5.22.2)
- Camber tolerances for beams and girders (clauses 5.22.2 and 5.22.4)
- Sweep of beams and girders (clause 5.22.5)
- Variation in web flatness, for both static and cyclic applications (clause 5.22.6)
- Warpage and tilt of flanges (clause 5.22.8)

Twist of box sections is not addressed in AWS D1.1, but clause 5.22.12 requires that twist of box members be "... individually determined and agreed upon between the Contractor and the Owner …" Because of their closed-shape nature, box sections have significant torsional resistance and it is virtually impossible to correct excessively distorted box sections. Fortunately, the same torsional resistance that precludes correction provides great resistance to distortion that occurs due to welding. When proper weld sequencing patterns are followed, excessive twisting of box sections is unusual. The engineer should consider details that

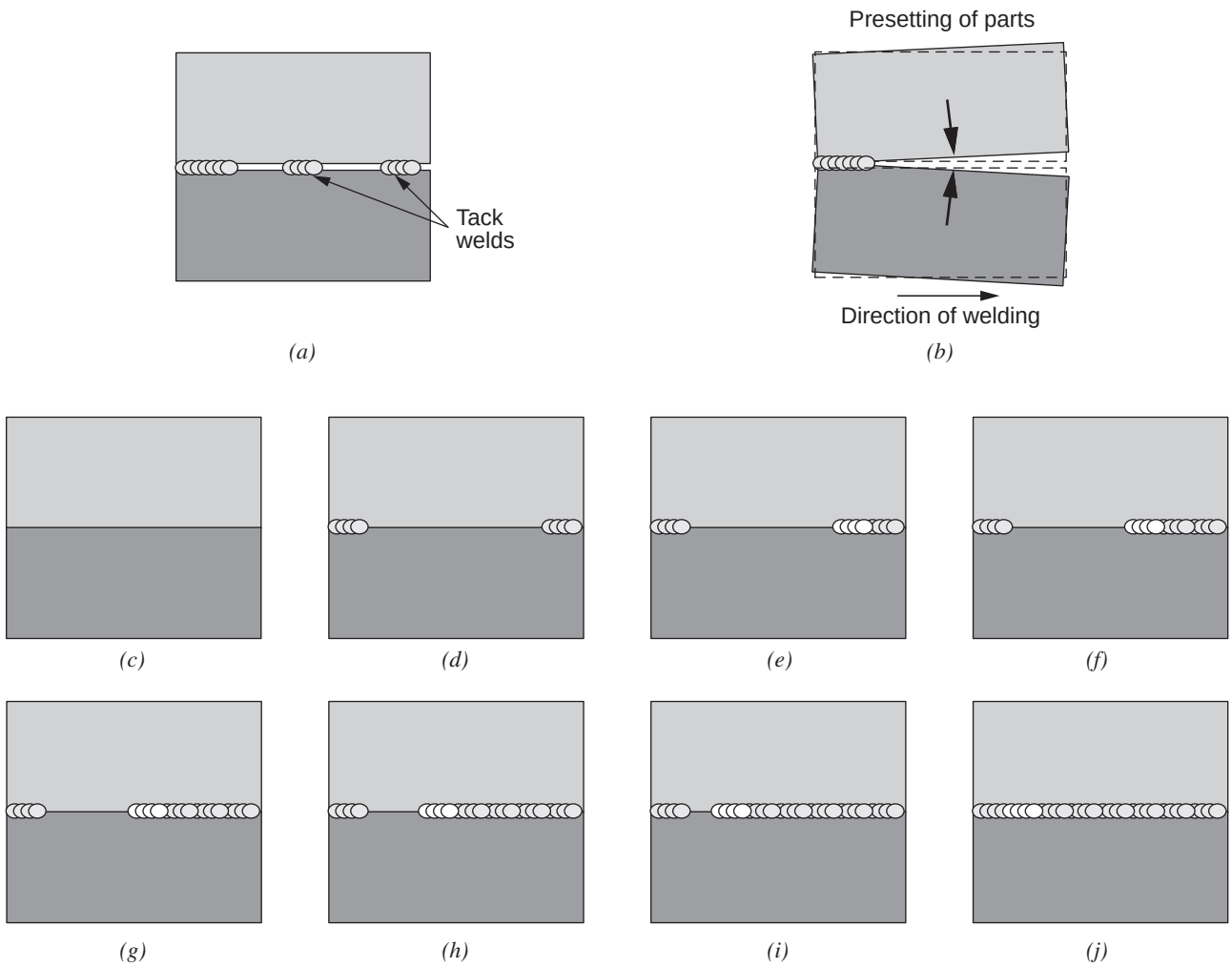

Fig. 7-11. Measures to limit rotational distortion.

accommodate variations in the twist of box sections. As necessary, appropriate limits on twist can be specified in contract documents. As is encouraged by the aforementioned requirements of AWS D1.1, cooperative interaction with a knowledgeable contractor is helpful when dealing with twist of box sections.

AESS Applications

AISC *Code* Section 10 provides distortion-related tolerances for welded assemblies for AESS applications. These tolerances apply when members are designated in the contract documents as AESS; more restrictive tolerances from those contained in Section 10 can be specified in the contract documents.

AESS applications are discussed in detail in Section 14.7 of this Guide; the coverage of AESS in this chapter on distortion is restricted to distortion-related tolerances for such projects. For AESS Classes 2, 3 and 4, the tolerances presented in Section 10 generally allow for half of the straightness tolerances that are applicable to non-AESS projects [AISC *Code* Section 10.4.3(b) and 10.4.5]. For curved AESS members, there are no additional restrictions on curvature beyond the tolerances used for non-AESS applications, because curved members have no straight lines that serve as reference points, and accordingly, slight deviations from a perfect curvature are usually indistinguishable.

7.4 SPECIALIZED DISTORTION CONTROL MEASURES

7.4.1 Adding Restraint

Restraint can be added to resist the shrinkage stresses and may range from tack welds to strongbacks to welding fixtures. Anything that can keep the parts from moving when the hot metal begins to shrink is helpful.

Restraint can be added by clamping or tack welding symmetrical parts back-to-back, causing the second part to resist the shrinkage that tends to move the first part. To offset angular distortion, the tips of the flange in the T-section can be clamped against the flange of another T-section, and the plastic portions of distortion will offset each other as illustrated in Figure 7-12. With respect to longitudinal camber or sweep as shown in Figure 7-13, back-to-back clamping can keep such members linear. In all cases, large clamping forces are needed to resist the shrinkage, and when the clamping forces are removed, there will always be some elastic springback. If such springback is unacceptable, wedges can be inserted between the parts before clamping to incorporate some presetting of the parts.

7.4.2 Weld Placement

When welds are designed to be on or near the neutral axis (NA) of a section, longitudinal shrinkage does not cause sweep or camber because the CG of the welds is concurrent with the NA of the section. Figure 7-14 illustrates this principle.

Welds may be balanced around the NA of a section, as shown in Figure 7-15, and many symmetrical shapes automatically provide for this option. However, in order to be effective, the whole cross section must work as a unit when the welding is performed. Consider Figure 7-15(a): If the T-section is first fabricated, considerable longitudinal distortion would occur. Then, when the flange is added to the T-section, even though the I-section is symmetrical, additional distortion will occur. Even though the final I-shape assembly is symmetrical with welds balanced about the NA, while this shape was being fabricated, it did not work as a unit. The whole assembly must be tack welded together first, before the four welds are made.

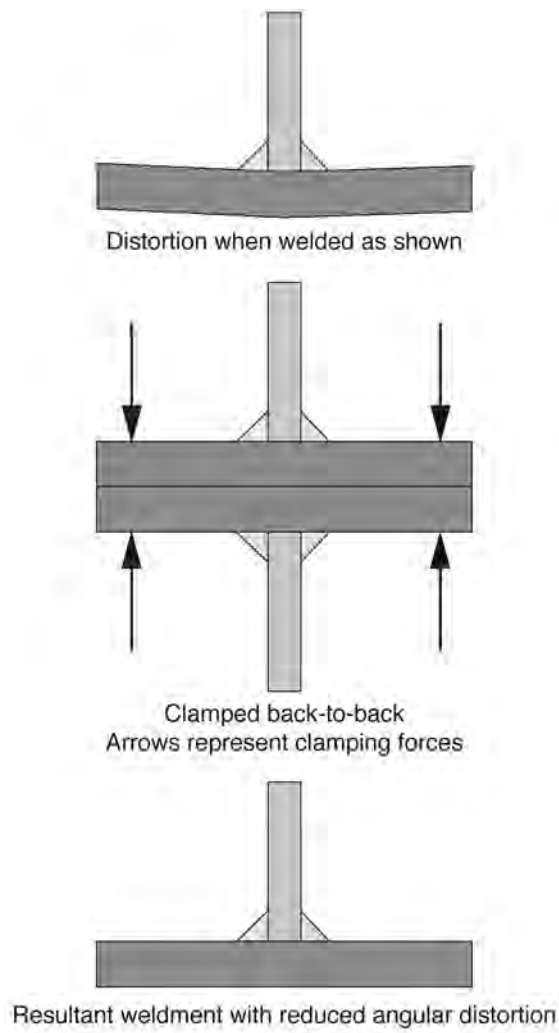

Fig. 7-12. Back-to-back clamping adding restraint.

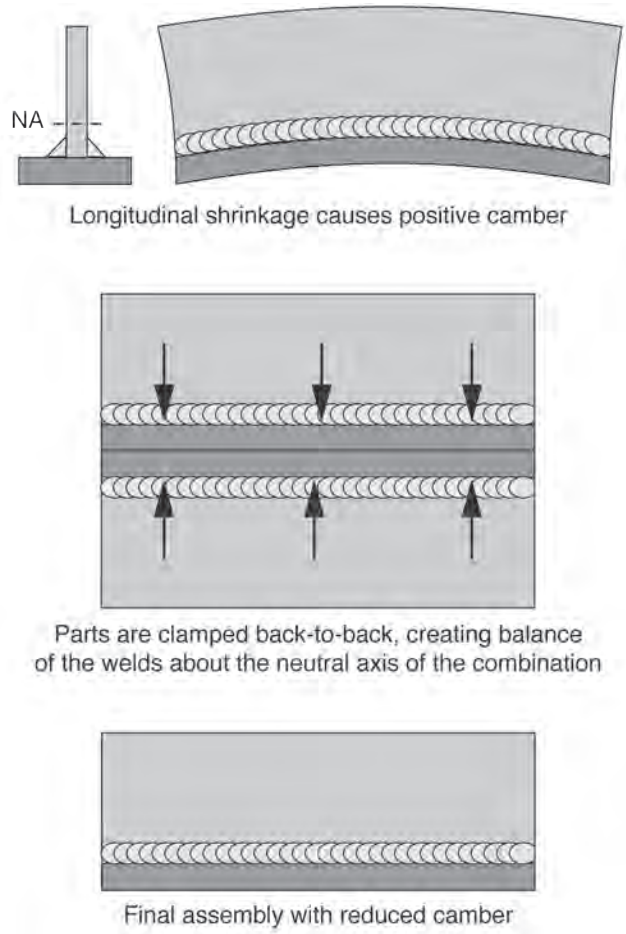

Fig. 7-13. Mirroring parts to create symmetry.

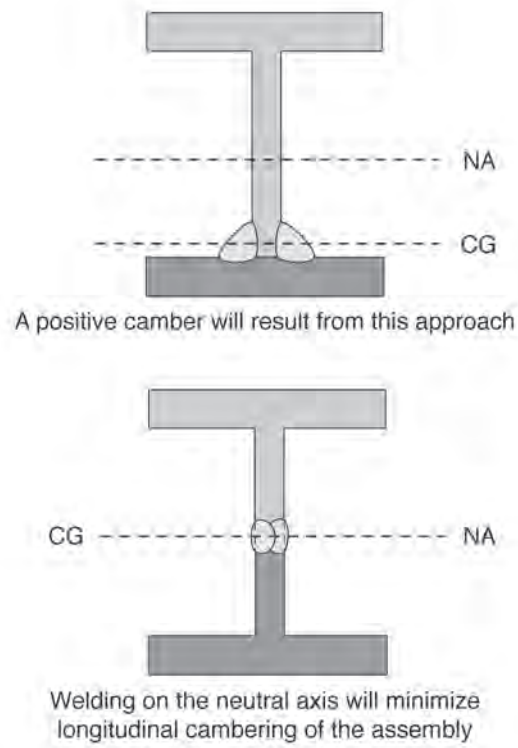

Fig. 7-14. Welding on the neutral axis.

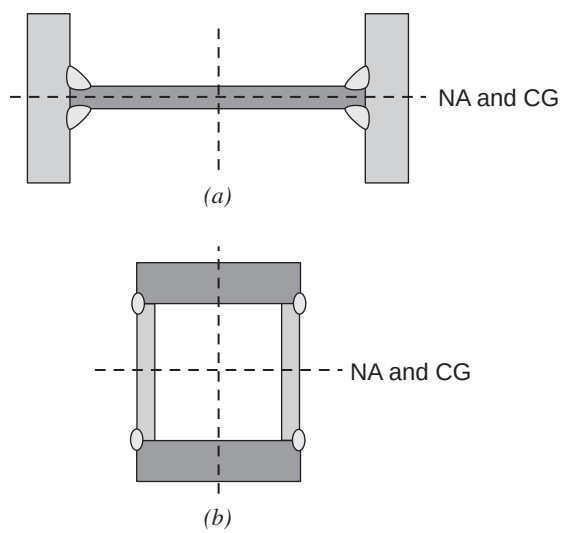

Fig. 7-15. Balancing welds about the neutral axis.

7.4.3 Welding Sequence

Longitudinal sweep or camber can sometimes be minimized or eliminated through a properly planned and executed welding sequence. Complicated assemblies where the CG of the welds is some distance from the NA of the section can sometimes be broken down into subassemblies where the weld CG and the section NA are concurrent. Consider the two sequences illustrated in Figure 7-16. In the first sequence, the three members are all tack welded together, and the four welds are made. Because of the nonsymmetrical nature of the shape, the CG of the welds is displaced from the NA of the shape by 0.442 in. (11.3 mm) [i.e., 1.5 in. – 1.058 in. (38.1 mm – 26.8 mm)]; this sequence will result in a negative camber. In the second sequence, the T-section is fabricated first. Notice that for this particular geometry, the weld CG and the section NA are concurrent. While the part may shrink longitudinally, it should still stay straight. Next, the T-section is added to the bottom flange. Again, the weld CG and the section NA are concurrent, and no sweep or camber would be expected. While this simple illustration does not replicate the scale of the real members that would be used in structural steel applications, the same principle has been successfully applied on larger assemblies.

7.4.4 Stress Relief

For parts that will be machined after welding, thermal stress relief may be used in order to achieve dimensional stability. Components of moving bridges, for example, may necessitate close-tolerance machining after welding; during machining, the residual stresses in an as-welded assembly may cause the part to move (i.e., distort) as steel is removed. To overcome this problem, the welded assembly may be stress relieved. Properly done, the residual stresses are reduced by approximately 90% and the amount of movement of the part will be correspondingly reduced. See Section 8.8.12 of this Guide.

Given the success of stress relief when used to control dimensional stability during machining, stress relief is sometimes inappropriately specified in the hope that it will eliminate the distortion caused by welding. Under most conditions, stress relief simply does nothing in terms of correcting for distortion. However, it is possible and not uncommon for distortion to actually increase as a result of stress relieving operations. This may be the result of the part changing shape as the residual stresses are relaxed. The more common situation is that the mass of the steel component causes deflection at elevated temperatures where the steel experiences a reduced yield strength and reduced modulus of elasticity. Thermal stress relief can eliminate elastic distortion, but this is generally a very small part of the overall distortion; stress relief will not eliminate plastic distortion.

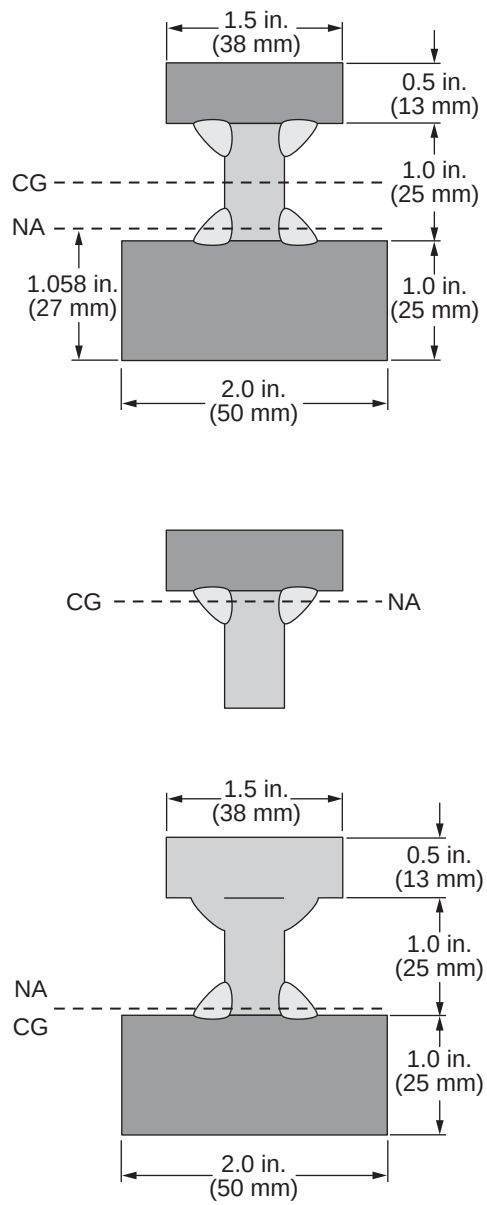

Fig. 7-16. Sequencing the order of welding.

Restricted site conditions necessitated a unique structure for the 150 N. Riverside project in the Chicago Loop, Chicago, Illinois.

Chapter 8
Welding Procedure Specifications

8.1 INTRODUCTION

A welding procedure specification (WPS) is "a document providing the required welding variables for a specific application to assure repeatability by properly trained welders and welding operators" (AWS, 2010d). A WPS is used to prescribe the combination of variables that are to be used to make a certain weld. The terms *welding procedure* or simply *procedure* may be used in lieu of the formal term, and the acronym WPS is commonly used. Fundamentally, a WPS is a communication tool that identifies all of the parameters by which a particular weld is to be made. Through the use of a WPS, the engineer, contractor, welder and inspector are provided the various details associated with making a specific weld.

WPS are important because of the many variables that can affect the quality of a weld. It is insufficient to simply purchase good materials (filler metals and base metals), put them into the hands of a skilled welder, and expect that good results will always be achieved because the quality of the weld depends on complex chemical and thermal reactions and other factors. The filler metal must be appropriate for the particular steel being welded. The preheat level for the steel must be correct, and the electrode must be operated on the proper polarity with an appropriate combination of amperage, voltage, travel speed and other welding variables.

While a skilled and knowledgeable welder may have learned some or all of this information from experience, the inspector on the same job may have no knowledge as to how a specific weld is to be made. Conversely, the less experienced welder may need to be given detailed information to ensure the welding is properly performed. Even for the experienced welder who may know from past practices how the welding is typically to be performed, changes in specifications or the grade of steel may necessitate new practices. Through a properly prepared WPS, everyone involved with the welding operation can work with a common understanding.

Welding procedure specifications are required for all welding done in accordance with AWS D1.1 (AWS, 2015c). Each fabricator or erector is responsible for the development of WPS according to AWS D1.1, clauses 4.2.1.1 and 4.7. AWS D1.1, clause 6.3, requires the inspector to review the WPS and to make certain that production welding parameters conform to the requirements of the code. The availability of the WPS is one of a few perform items that both the quality control (QC) and quality assurance (QA) inspector are required to do according to AISC *Specification* Table N5.4-1 before welding begins, for a very pragmatic reason—there is no reason for welding to commence before all parties involved know how a particular weld is to be made.

AWS D1.1 allows for two types of WPS: those that are prequalified and those that are qualified (or, qualified by test). These are addressed at length in Sections 8.4 and 8.5 of this Guide. In brief, prequalified WPS are subject to many prescribed rules within the code, and when all of the regulated variables comply with these limits, the WPS is deemed prequalified and does not need to be tested before it is used. In contrast, all qualified WPS are subject to mechanical and nondestructive testing. Regardless of whether WPS are prequalified or qualified by test, they are required to be written. One prevalent misconception is that if the actual parameters under which welding will be performed meet all of the conditions for prequalified status, written WPS are not required; this is, however, an incorrect understanding of AWS D1.1 requirements. AWS D1.1, clause 5.5, requires all WPS to be written.

8.2 WRITING WELDING PROCEDURE SPECIFICATIONS

AWS D1.1, clauses 4.2.1.1 and 4.7, state that the contractor is responsible for the development of WPS. This task is typically assigned to a welding specialist within the contractor's organization who generates or writes the WPS. Many issues must be considered when selecting welding procedure values to be included on the WPS. While all welds must have fusion to ensure connection strength, the required level of penetration is a function of the joint design and the weld type. All welds are required to have a certain strength, although the exact level required is a function of the weld type and direction of loading. Some welds are required to deliver specified minimum levels of fracture toughness, while others are not. A variety of production-related issues such as the position of welding must be considered when WPS are developed. Determining the most efficient means by which these conditions can consistently be achieved in fabrication and erection is the task of knowledgeable welding technicians and engineers who then create the written WPS that reflect the applicable code and specification requirements.

The written WPS then communicates those requirements to the welders and others involved in the construction process. The welder is expected to be able to follow the WPS, although the welder may not know how or why each particular variable was selected. Inspectors are not required to develop WPS, but inspectors are obligated to ensure that WPS are available and are followed.

Table 8-1. Specific Requirements for Various Weld Types	
Weld Type	**AWS D1.1 Reference**
Fillet welds	Clause 3.9
Plug and slot welds	Clause 3.10
PJP groove welds	Figure 3.2 and clauses 3.11 and 3.12
CJP groove welds	Figure 3.3 and clauses 3.11 and 3.13

8.3 USING WELDING PROCEDURE SPECIFICATIONS

Because the WPS is a communication tool, it follows that it must be available to foremen, inspectors, welders and others involved with the welding operations. A WPS locked away in a cabinet serves little purpose if it never gets to the shop floor or the erection site. AWS D1.1 is not prescriptive in its requirements regarding the availability and distribution of WPS. Some shop fabricators issue each welder employed in their organization a set of welding procedures that are typically retained in the welder's locker or tool box. Others list WPS parameters on shop drawings. Some company bulletin boards feature listings of typical WPS used in the organization. Regardless of the method used, WPS must be available to those authorized to use them.

It is in the contractor's best interest to ensure that WPS are followed by the welders, not only from a quality perspective, but also because of the effect on productivity. Improper welding parameters can directly affect weld quality. Welding parameters that result in reduced weld deposition rates will negatively impact productivity.

8.4 PREQUALIFIED WELDING PROCEDURE SPECIFICATIONS

AWS D1.1 provides for the use of prequalified WPS. Prequalified WPS are those that have a history of acceptable performance and, therefore, are not subject to the qualification testing imposed on all other welding procedures. The use of prequalified WPS does not preclude the requirement that they be available in a written format. The use of prequalified WPS still requires that the welders be appropriately qualified. All of the workmanship provisions imposed in AWS D1.1, clause 5, apply when prequalified WPS are used. The only code requirements exempted by prequalification are the nondestructive and mechanical testing required for qualification of welding procedures.

Prequalified welding procedures must conform to all the prequalified requirements in the code. Failure to comply with a single condition of prequalification eliminates the opportunity for the welding procedure to be prequalified according to AWS D1.1, clause 3.1. Some of those requirements are included in the following:

- The welding process must be prequalified. Only shielded metal arc welding (SMAW), submerged arc welding (SAW), gas metal arc welding (GMAW) [(except gas metal arc welding-short circuit arc (GMAW-S)], and flux-cored arc welding (FCAW) WPS may be prequalified (clause 3.2.1). Note: both gas-shielded FCAW (FCAW-G) and self-shielded FCAW (FCAW-S) are prequalified and included under the generic designation FCAW.
- The base metal/filler metal combination must be prequalified. Prequalified base metals, filler metals and combinations are shown in AWS D1.1, Tables 3.1 and 3.2.
- The minimum preheat and interpass temperatures prescribed in AWS D1.1, Table 3.3, must be employed.
- Specific requirements for the various weld types must be maintained, as summarized in Table 8-1.

AWS D1.1, Figures 3.2 and 3.3, contain the prequalified joint details for groove welds and Figure 3.5 contains the prequalified joint details for fillet welds; such details must be used for prequalified WPS. Even when such details are employed, the welding procedure must be qualified by test if other prequalified conditions are not met. For example, if a prequalified detail is used with a steel that is not listed in AWS D1.1, Table 3.1, the welding procedure must be qualified by test because the steel is not prequalified.

The use of a prequalified welding joint detail does not exempt the engineer from exercising engineering judgment to determine the suitability of the particular procedure for the specific application according to AWS D1.1, clause 1.4.1. Alternatively stated, a prequalified joint detail can be misapplied, as shown in Figure 8-1. This detail was used in a project, and not surprisingly, the center plate tore in the through-thickness direction due to the significant shrinkage stresses that were imposed on it. While prequalified, this detail was inappropriate for the application.

Prequalified status requires conformance to a variety of procedural parameters that include maximum electrode diameters, maximum welding current, maximum root-pass thickness, maximum fill-pass thickness, maximum single-pass fillet weld sizes, and maximum thickness of individual

weld layers as detailed in AWS D1.1, Table 3.6. The individual developing the various combination of variables listed on the WPS must ensure that these limits will be met when the WPS is used as written. In addition to all of the preceding requirements, welding performed with a prequalified WPS must be in conformance with the other welding code clauses, including those contained in AWS D1.1, clause 5, which is applicable to all fabrication done in accordance with the code.

The welding code does not imply and it should not be assumed that a prequalified WPS will automatically achieve a weld with the required quality, even when made by a qualified welder. It is the contractor's responsibility to ensure that the particular parameters selected within the requirements of the prequalified WPS are suitable for the specific application. An extreme example will serve as an illustration.

Consider a proposed WPS for making a ¼-in. (6 mm) fillet weld on a ⅛-in.- (3 mm) thick piece of ASTM A36 steel in the flat position. The weld type (a fillet) is prequalified per AWS D1.1, Figure 3.5. The ASTM A36 steel is prequalified per AWS D1.1, Table 3.1. SAW is a prequalified process per AWS D1.1, clause 3.2.1. The filler metal, F7A2-EM12K, is prequalified per AWS D1.1, Table 3.2. No preheat is specified because it would not be required according to AWS D1.1, Table 3.3. The electrode diameter selected is ⅛ in. (3 mm), less than the ¼-in. (6 mm) maximum specified in AWS D1.1, Table 3.6. The maximum single-pass fillet weld size in the flat position is unlimited in Table 3.6, so the ¼-in. (6 mm) fillet size can be prequalified. The current level selected for making this particular fillet weld is 800 amps, less than the 1,000 amp maximum specified in Table 3.6. Thus, all of the applicable prequalified conditions have been met.

However, the current level of 800 amps imposed on the electrode diameter for the thickness of steel on which the weld is being made is inappropriate—melt-through would occur. The WPS would not meet the requirements stated in AWS D1.1, clause 5.3.1.2, which stipulates that the size of electrode and amperage be suitable for the thickness of material being welded. This illustration demonstrates the fact that compliance with all prequalified conditions does not guarantee that the combination of selected variables will always generate an acceptable weld.

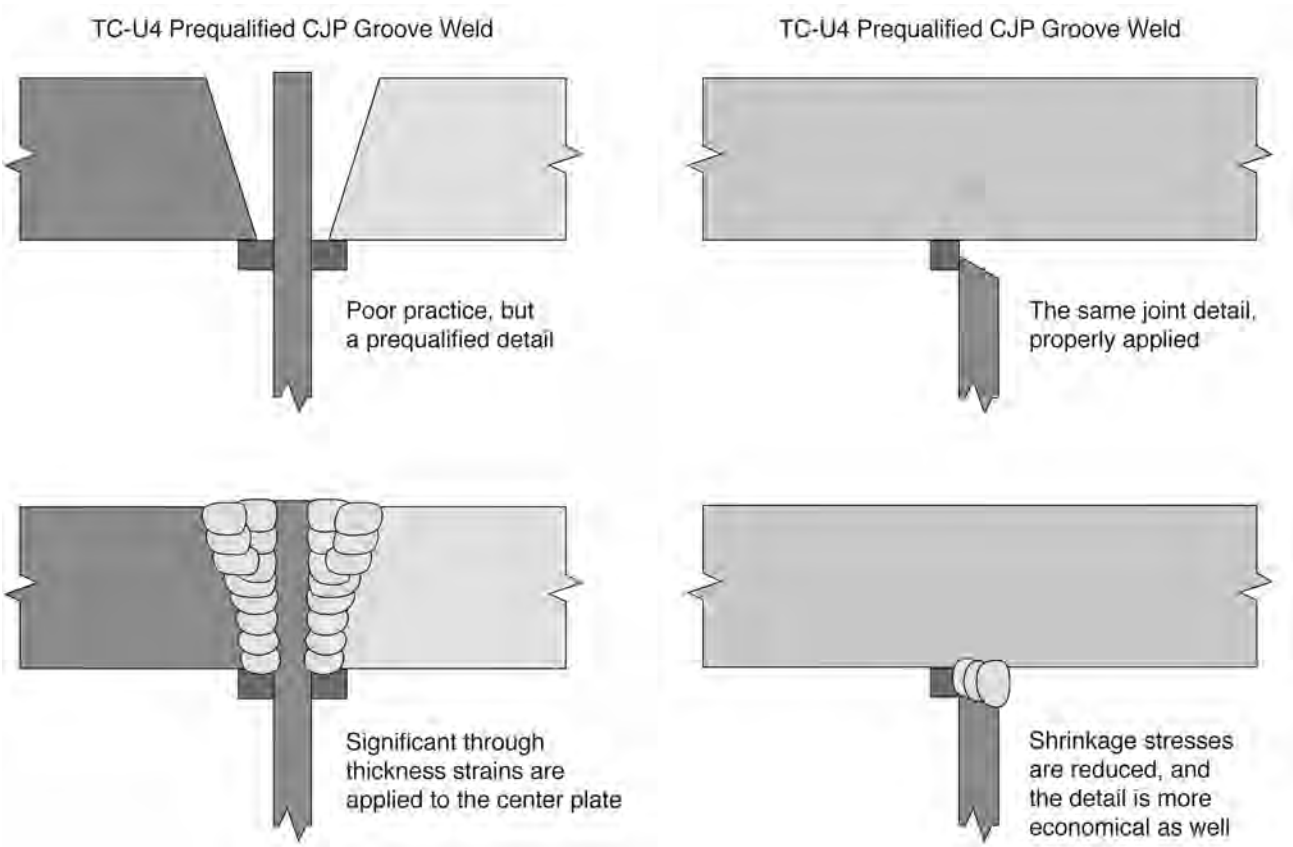

Fig. 8-1. Improper and proper uses of prequalified joint details.

8.5 QUALIFIED WELDING PROCEDURE SPECIFICATIONS

Most welding of steel buildings in the United States is performed in accordance with prequalified WPS. However, there are several situations wherein AWS D1.1 does not permit the use of prequalified WPS. Electroslag WPS, for example, cannot be prequalified (see Section 2.6 of this Guide). A WPS for welding on an unlisted steel must be qualified by test; this would include all steels that do not contain a designation governed by a U.S. agency such as ASTM. Steels with a specified minimum yield strength equal to or greater than 90 ksi (620 MPa) must be qualified by test (see Section 5.3.3 of this Guide). Weld joint details that deviate from the prescribed geometry by more than the permitted tolerances will require that WPS that use the nonprequalified detail be qualified by test. Many other examples could be cited, but the important concept is this: Any deviation from prequalified conditions will necessitate WPS qualification.

In some cases, the engineer may specify in the contract documents that WPS be qualified by test. This may be done for many reasons, but one of the most common situations is when the weld, or perhaps the HAZ, is required to deliver a specific level of fracture toughness. It is possible that all the applicable conditions would permit the WPS to be prequalified, but due to the contractual requirements that fracture toughness testing be performed, the WPS must be qualified.

To qualify a WPS, the contractor must first weld a test plate that will be subject to a variety of nondestructive and mechanical tests. The welding variables and parameters used during welding of the test plate, as well as the results from the required tests, are recorded on a procedure qualification record (PQR). If the testing demonstrates that all the AWS D1.1 requirements and job specifications have been met, then the contractor can develop a specific WPS based upon these results. At a minimum, the same parameters used in making the test weld will constitute a valid WPS. The welding parameters used in making the test plate as recorded on the PQR are simply transcribed to a separate form and become a WPS rather than a PQR.

It is possible to write more than one WPS from a successful PQR. Welding procedures that are sufficiently similar to those tested can be supported by the same PQR. Significant deviations from the PQR conditions, however, necessitate additional qualification testing. Changes in welding conditions that are significant enough to warrant additional testing are called essential variables and are listed in AWS D1.1, Tables 4.5, 4.6 and 4.7. For example, consider an SMAW welding procedure that is qualified by test using an E8018-C3 electrode. From that test, it would be possible to write a WPS that utilizes E7018 (because this is a decrease in electrode strength), but it would not be permissible to write a WPS that utilizes E9018-G electrode (because Table 4.5 lists an increase in filler metal classification strength as an essential variable). It is important to carefully review the essential variables in order to determine whether a previously conducted test can be used to substantiate the new procedure being contemplated.

AWS D1.1, Table 4.8, defines what changes can be made in the base metals used in production versus qualification testing. If WPS qualification is performed on a nonprequalified joint geometry, and acceptable test results are obtained, WPS may be written from that PQR utilizing any of the prequalified joint geometries (AWS D1.1, Table 4.5, Item 31).

8.6 WPS AND AWS D1.5

This Design Guide is primarily focused on building construction and not bridge construction. However, a brief note regarding WPS for bridge welding, as governed by AASHTO/AWS D1.5 (AWS, 2015a), is provided to highlight differences in the approach used by that code as compared to AWS D1.1. Note that prequalified WPS for work done to AASHTO/AWS D1.5 may be used with SMAW only, and then, only under specific conditions.

Most bridge welding WPS are qualified by test. The justification for mandated WPS qualification stems in part from the fact that the welds on bridges are required to have minimum levels of fracture toughness. Due to the effect that various welding parameters may have on fracture toughness, WPS qualification testing is required, including the measurement of notch toughness by means of CVN specimens. Several qualification methods are presented in AWS D1.5, including a maximum heat input method, a maximum-minimum heat input method, and a production procedure method; each method has advantages and limitations

8.7 WPS AND AWS D1.8

AWS D1.8, *Seismic Welding Code—Seismic Supplement* (AWS, 2016), contains a unique method of ensuring that deposited weld metal has the specified minimum CVN toughness, yet permits the use of prequalified WPS as well. Under AWS D1.8, two qualification test plates are made and the weld metal is nondestructively and mechanically tested. One test plate is welded with a relatively high level of heat input, while the other is welded with a relatively low level of heat input. The heat input tests can be conducted by various parties, but it is typical for the filler metal manufacturer to conduct such tests.

When the requisite high and low heat input tests are available, the contractor is permitted to write prequalified WPS, provided the following conditions are met:

- All AWS D1.1 prequalified conditions are met.
- The computed heat input for all the welding conditions listed on the WPS generate a heat input that is below the high heat input value as recorded for the heat input qualification test plates.

- The computed heat input for all the welding conditions listed on the WPS generate a heat input that is above the low heat input value as recorded for the heat input qualification test plates.

8.8 EFFECTS OF WPS VARIABLES

The effects of the different welding variables depend somewhat on the welding process being employed, but general trends apply to all the processes. It is important to distinguish the difference between constant current (CC) and constant voltage (CV) electrical welding systems when considering the effect of WPS variables. SMAW is always done with a CC system. FCAW and GMAW generally are performed with CV systems. SAW may utilize either.

8.8.1 Amperage

Amperage is a measure of the amount of current flowing through the electrode and the work. It is a primary variable in determining heat input. Generally, an increase in amperage means higher deposition rates, deeper penetration, and more admixture. The amperage flowing through the whole length of an electrical circuit is the same everywhere, and thus current can be measured at any location. An acceptable amperage range is listed on the WPS. For FCAW, GMAW and SAW, wire feed speed may be controlled in lieu of amperage (see Section 8.8.4 of this Guide and AWS D1.1, Table 3.6 and Table 4.5).

8.8.2 Arc Voltage

Arc voltage is the voltage drop associated with the arc itself. Theoretically, it is measured from the tip of the electrode to the weld pool, which is impossible. Arc voltage is directly related to arc length; as the arc voltage increases, the arc length increases. For semiautomatic welding on a constant voltage system, the voltage is determined primarily by the machine setting, and thus the arc voltage is relatively fixed. For SMAW on CC systems, the arc voltage is determined by the arc length, which is controlled by the welder.

In semiautomatic welding, arc voltage is typically estimated by taking a reading from a point on the wire feeder, where the gun and cable connection is made, to the workpiece. For SMAW welding, voltage is not usually monitored, because it is constantly changing and cannot be controlled except indirectly by the welder through control of the arc length. For automatic welding, the arc voltage can be measured from the welding torch to the workpiece.

The voltage in a welding circuit is not constant but is composed of a series of voltage drops. Consider a constant voltage semiautomatic circuit as an example; there is a voltage drop associated with the welding lead from the power source to the wire feeder. Another drop is associated with the gun and cable assembly. From the contact tip to the arc, there is a drop associated with the electrode extension. Next, there is the arc voltage, followed by drops associated with the work piece to work clamp connection, and then the work lead that eventually connects to the power supply. When voltage is measured at the power supply, misleading information can be acquired because all of these voltage drops will be included in the voltage measured at the welding machine terminals

For welding processes that use wire electrodes like SAW, FCAW and GMAW, arc voltage is an important procedural variable—the higher the voltage, the longer the arc length, and vice versa. The arc length in turn affects the weld bead width and other aspects of the weld geometry. For SAW, the arc length determines how much flux is melted; for gas-shielded processes, longer arc lengths require greater volumes of shielding gas. For constant voltage systems, the welder adjusts the output voltage of the welding machine.

For SMAW, the arc length determines the arc voltage; there is no control on an SMAW welding machine that permits the arc voltage to be set. SMAW welders manually control the length of the welding arc—when the arc is too short, the electrode will stick to the work; when the arc is too long, the arc goes out. Accordingly, there is a relatively narrow range of arc lengths that can be utilized with a correspondingly narrow range of arc voltages that will result. For SMAW, arc voltage is not considered an essential variable (see AWS D1.1, Table 4.5, Item 16).

To compute heat input (see Section 8.8.9 of this Guide), a value for voltage is required. Ideally, the value used is the arc voltage. The voltage as delivered by the power supply to the welding circuit is not a meaningful value for the determination of heat input. For SAW, FCAW and GMAW, it is usually possible to obtain a voltage reading between the wire feeder and the work—this voltage will be very close to the arc voltage. For SMAW, the arc voltage can be neither easily measured, nor can it be adjusted. For purposes of heat input computation, for smaller diameter SMAW electrodes, ⅛ in. (3 mm) or less, the voltage is typically in the range of 18 to 24 volts, whereas for larger electrodes, the voltage will usually be in the range of 22 to 30 volts.

8.8.3 Travel Speed

Travel speed, measured in inch per minute (mm per minute), is the rate at which the electrode is moved relative to the joint. If a weave is applied, the travel speed is the rate at which welding advances, not the rate of weaving. All other variables being equal, travel speed has an inverse effect on the size of the weld beads. As the travel speed increases, the weld size will decrease. Extremely low or high travel speeds may result in weld fusion problems. Travel speed is a key variable used in computing heat input; reducing travel speed increases heat input. The WPS lists a range of acceptable travel speeds.

8.8.4 Wire Feed Speed

For automatic and semiautomatic welding processes, wire feed speed is a measure of the rate at which the electrode is passed through the welding gun and delivered to the arc. Typically measured in inch per minute (ipm) or meters per minute (m/min) the wire feed speed is proportional to deposition rate and directly related to amperage. When all other welding conditions are held constant (e.g., the same electrode type, diameter, arc voltage and electrode extension), an increase in wire feed speed will directly lead to an increase in amperage. For slower wire feed speeds, the ratio of wire feed speed to amperage is relatively constant and linearly proportional. For higher levels of wire feed speed, it is possible to increase the wire feed speed at a disproportionate rate as compared to the increase in amperage. When these conditions exist, the deposition rate per amp increases, but at the expense of penetration.

For automatic or semiautomatic welding processes, it is required to report either amperage or wire feed speed, but not both, although it is permissible to report both (see AWS D1.1, Table 3.6 and Table 4.5). Wire feed speed is the preferred method of maintaining welding procedures for constant voltage wire feed processes. The wire feed speed can be independently adjusted and measured directly, regardless of the other welding conditions. It is possible to maintain amperage as an alternative to wire feed speed, although the resultant amperage for a given wire feed speed may vary depending on the polarity, electrode diameter, electrode type and electrode extension.

8.8.5 Electrode Extension

For automatic and semiautomatic welding processes, the length of electrode that extends beyond the contact tip to the arc is known as the electrode extension. It is colloquially called stickout (SO) or electrical stickout (ESO). The proper electrode extension depends on the electrode type and diameter; a recommended value or range is usually provided by the electrode manufacturer. With a constant voltage system, when the electrode extension is increased without any change in wire feed speed, the amperage will decrease, resulting in less penetration and less admixture. Electrode extension is not an essential variable in AWS D1.1, Tables 3.7 or 4.5; however, it is important for the welder to know what ESO should be used. Extreme changes to ESO will cause production current (amperage) levels to deviate from the acceptable values as prescribed in the WPS, providing an indirect control of electrode extension.

Welders using semiautomatic welding processes maintain the electrode extension by observing the length of electrode extending from the end of the contact tip to the arc. When significant deviations are made from the ideal electrode extension dimension, the arc typically becomes erratic, prompting a skilled welder to make appropriate adjustments. For automatic welding, the electrode extension is mechanically established by the welding equipment. For automatic applications, it is more common to establish and maintain the contact tip-to-work distance, as discussed in Section 8.8.6 of this Guide.

8.8.6 Contact Tip-to-Work Distance

The contact tip-to-work distance (CTWD), which is sometimes abbreviated as CTW, is the electrode extension plus the arc length. This is the physical distance from the contact tip to the work, and for automatic welding, it is typically maintained by the mechanical apparatus that aligns the welding torch with respect to the joint. CTWD is usually the electrode extension dimension, plus ⅛ to ¼ in. (3 to 6 mm), which represent the arc length. Changes in CTWD have the same effect as changes to the electrode extension. Like the previously discussed variable of electrode extension, AWS D1.1 does not list CTWD as a key welding variable in Table 3.7 or 4.5. Extreme changes in CTWD will result in changes in welding current that will deviate from acceptable values as prescribed in the WPS, providing an indirect control of CTWD.

A welder cannot accurately observe the CTWD when welding and instead observes the electrode extension. With an automatic welding machine, the CTWD is easily established before welding begins; the automatic equipment maintains the distance during welding.

8.8.7 Electrode Diameter

The diameter of the electrode determines how much current it can carry. Larger electrodes can carry higher welding currents. For SMAW electrodes, the diameter is that of the steel core and does not include the coating. The diameter of the electrode to be used is listed on the WPS.

8.8.8 Polarity

Polarity is associated with direct current (DC) welding circuits and describes the direction of current flow. Positive polarity, also called reverse polarity, is achieved when the electrode lead is connected to the positive terminal of the power supply, and the work lead is connected to the negative terminal. Negative polarity (or straight polarity) occurs when the electrode is connected to the negative terminal and the work lead to the positive terminal. Alternating current (AC) is not a polarity, but a current type. With AC, the current flow is alternately positive and negative. The polarity to be used is listed on the WPS.

Submerged arc is the only process that commonly uses either electrode positive or electrode negative polarity with the same type of electrode. For a fixed wire feed speed, a submerged arc electrode will require more amperage on positive polarity than on negative, and the higher level of current will result in deeper penetration.

Some submerged arc power sources are capable of producing a square wave alternating current. The positive cycle of the wave form provides greater penetration into the joint while the negative cycle provides greater deposition. Typically, the square wave is capable of being manipulated so as to increase or decrease the time in the positive or negative cycle or adjust the peak amplitude of the positive or negative cycle. Squarewave output allows for finer adjustment of the power source output than is possible with traditional sine wave AC machines. As compared to either DC negative or DC positive output, squarewave output allows for more optimized control of SAW parameters, optimizing quality and productivity.

8.8.9 Heat Input

Heat input (sometimes called energy input) is a mathematical estimate of the amount of thermal energy that is introduced into the steel when the weld is made. Heat input in turn determines the solidification and cooling rates of the weld metal, and the cooling rates that will be experienced in the heat affected zone. Changes in the thermal cycles experienced by the weld and the HAZ will affect the resultant properties of these regions.

The following equation is typically used to compute heat input, H:

$$H = \frac{60EI}{1000S} \tag{8-1}$$

where

E = arc voltage, volts

I = current, amps

S = travel speed, in./min (mm/min)

Higher levels of heat input add more thermal energy into a weld and cause the weld and HAZ to cool more slowly. However, because amperage is related to deposition rates and travel speeds are related to weld sizes, higher heat input levels will typically result in weld beads with larger cross-sectional areas. For single-pass welds, higher heat input will mean a larger weld. For multiple-pass welds, higher heat input will decrease the number of passes needed to complete the weld. Higher heat input usually results in slightly decreased yield and tensile strength in the weld metal.

In many respects, lower levels of heat input have just the opposite effect of high heat input levels; lower levels add less thermal energy into a weld and cause the weld and HAZ to cool more rapidly, and will deposit weld beads with smaller cross-sectional areas. Single-pass welds made with lower heat input will generally be smaller, and multiple-pass welds will require a greater number of weld passes to complete the weld. Lower heat input usually results in slightly increased yield and tensile strength in the weld metal. All of these characteristics are opposites of those for high heat input. Extremely low heat input may result in weld or HAZ cracking because of excessively high cooling rates. At some level, fusion may be inhibited by very low levels of heat input.

The relationship of weld metal fracture toughness to heat input is more complicated; both very low and very high heat input levels are generally undesirable for good weld metal fracture toughness, particularly for multiple-pass welding. The higher cooling rates associated with low heat input welding cause the weld metal to increase in strength and decrease in ductility. Additionally, when subsequent weld passes are deposited on top of these welds in a multipass weld, there is little additional energy to reheat the previously deposited beads; it is the reheating of the previously deposited weld metal that refines the weld metal and improves the fracture toughness. Thus, low heat input welding procedures may deposit weld metal with compromised fracture toughness. In terms of fracture toughness and high heat input levels, the large weld beads and slow cooling rates may both lead to compromised fracture toughness, too. Slow cooling rates may lead to very large grain sizes which are poor for good fracture resistance. While each subsequent weld pass provides ample thermal energy to refine previously deposited beads, the extent of refinement of the large previously deposited beads is limited. Additionally, the number of weld passes in a given joint will be reduced when high heat input levels are used, reducing the number of refinement cycles possible. Given that both low and high heat input levels can lead to compromised fracture toughness levels in weld metal, optimized fracture toughness levels are achieved with medium heat input levels.

Heat input is used to predict the cooling rates associated with each weld pass. Consider a single-pass weld made with a heat input of 50 KJ/in. (2 KJ/mm). A multipass weld may require 10 weld passes, each made with 50 KJ/in. (2 KJ/mm). While the total energy introduced into the multipass weld will be 10 times that of the single-pass weld, the heat input level for each weld is the same. Every thermal cycle created by each weld pass in the multiple-pass weld will result in a similar cooling cycle as is experienced in the single-pass weld, when all conditions are the same, including the preheat and interpass temperature.

8.8.10 Preheat and Interpass Temperature

Preheat and interpass temperature are used to control cracking tendencies, typically in the base materials. Preheat is the temperature of the steel before the arc is initiated. In multiple-pass welds, the interpass temperature is the temperature of the steel before subsequent weld passes are initiated. The proper values for these thermal controls depend on the type, composition and thickness of base metal, the WPS heat input level, and the hydrogen content of the weld metal.

Preheat must be sufficient to prevent cracking. AWS D1.1, Table 3.3, provides minimum preheat temperatures for various prequalified steels. Higher preheat temperatures may be required for some situations.

The interpass temperature can affect the mechanical properties of the deposited weld metal. For most carbon-manganese-silicon systems, a moderate interpass temperature promotes good fracture toughness. Interpass temperatures greater than 550°F (290°C) may negatively affect fracture toughness. When the base metal receives little or no preheat, or when low interpass temperatures are used, the resultant rapid cooling may also lead to deterioration in the ductility and fracture toughness of the weld metal.

Preheat and interpass temperatures are specified on WPS, often as a function of the thickness for various grades of steel that can be used.

8.8.11 Post Heat

Post heat involves heating a weld joint after welding to a prescribed temperature and then holding it at that temperature for a given length of time. Temperatures and times vary, but 400 to 450°F (200 to 230°C) with a time of one hour per in. (25 mm) of thickness is typical. The purpose of post heat is to diffuse any remaining hydrogen that might cause cracking. Post heat is not normally required, but when necessary it is specified on the WPS.

8.8.12 Stress Relief

Weldments or localized portions of weldments may be required to be thermally stress relieved. Temperatures and times vary, but 1,100 to 1,150°F (600 to 630°C) with a time of one hour per in. (25 mm) of thickness is typical. While stress relief may be specified for multiple reasons, the most common purpose in the structural field is to control dimensional stability on weldments subject to machining (see Section 7.4.5 of this Guide). Because machining of structural components is rare, stress relief is also rare. Under rare conditions, stress relief may be specified to control cracking. When necessary, stress relief is specified on the WPS.

8.9 SAMPLE FORMS

AWS D1.1/D1.1M contains sample forms for WPS and PQR in Annex M. These forms may be used in their entirety or simply as a guide as shown in Figure 8-2. The forms are also available on the AWS website at http://go.aws.org/D1forms.

8.10 CODE-COMPLIANT VERSUS USEFUL WPS

The implication of the title of this section suggests a WPS may comply with the AWS D1.1 code but not be useful; the implication is intentional. The most important purpose of a WPS is to communicate to the welder how a weld is to be made. The WPS should give the welder all the information necessary to make a quality weld. This information should certainly include code-mandated information, such as amperage and voltage, but should also include information that is important to making the welds that may not be mandated by the code. For example, the torch angle may be important for some applications; this information should be part of the WPS, even though not mentioned by AWS D1.1 as an essential variable. A code-compliant WPS need not list torch angle, but a useful WPS does.

WPS may be prepared in a way that complies with the welding code, but does not enable the typical welder to follow the WPS without additional information. For example, a WPS may list the preheat level as "per AWS D1.1, Table 3.3," and such a practice complies with the code. However, unless the welder has access to this table and knows the grade and thickness of steel involved, this practice does nothing to tell the welder what level of preheat is required. A useful WPS lists the preheat temperature for the grade and thickness of steel involved.

Two unfortunate practices have developed that actually impede quality welding. First, WPS are too often modified and adjusted to satisfy engineers and inspectors with the effect of making them less welder-friendly. For example, while heat input is important for some applications and certainly must be considered for those situations, the welder does not need this information. The welder must know and control the variables that determine heat input (i.e., amperage, voltage and travel speed), but does not need to know the value of heat input that will be generated with these parameters.

The second unfortunate development is listing on the WPS the full range of parameters that would be permitted by the welding code. For example, perhaps a given diameter of SAW electrode would allow for welding with 400 to 800 amps, but optimized results are obtained with 600 amps. Unfortunately, if 600 amps is listed on the WPS, and if 590 amps is used, overzealous inspectors may reject the welds as being made outside of the WPS values. To counter this tendency, some contractors will list the full allowable range of current. However, this approach leaves the welder with little direction as to what current level should be used. Certainly, there is a huge productivity difference between welding at 600 amps versus 450 amps (likely a 30% difference) and there may be quality differences as well; 600 amps may result in better fusion than when welding is done at 450 amps, for example.

Some contractors have gone so far as to at least consider having two sets of WPS—a broad WPS for use by inspectors and engineers, and a more restrictive WPS that is a subset of the broad WPS—the more restrictive WPS is the one that is used by the welder. This approach highlights the difference between code-compliant WPS and useful WPS.

Sample WPS Form (GTAW & SMAW)
WELDING PROCEDURE SPECIFICATION (WPS)

Company Name _____ WPS No. _____ Rev. No. _____ Date _____

Authorized by _____ Date _____ Supporting PQR(s) _____ CVN Report _____

BASE METALS	Specification	Type or Grade	AWS Group No.
Base Material			
Welded To			
Backing Material			
Other			

BASE METAL THICKNESS	As-Welded	With PWHT
CJP Groove Welds		
CJP Groove w/CVN		
PJP Groove Welds		
Fillet Welds		
DIAMETER		

JOINT DETAILS	
Groove Type	
Groove Angle	
Root Opening	
Root Face	
Backgouging	
Method	

POSTWELD HEAT TREATMENT	
Temperature	
Time at Temperature	
Other	

JOINT DETAILS (Sketch)

PROCEDURE								
Weld Layer(s)								
Weld Pass(es)								
Process								
Type (*Manual, Mechanized, etc.*)								
Position								
Vertical Progression								
Filler Metal (AWS Spec.)								
AWS Classification								
Diameter								
Manufacturer/Trade Name								
Shielding Gas Compos. (GTAW)								
Flow Rate (GTAW)								
Nozzle Size (GTAW)								
Preheat Temperature								
Interpass Temperature								
Electrical Characteristics	—	—	—	—	—	—	—	—
Electrode Diameter (GTAW)								
Current Type & Polarity								
Amps								
Volts								
Cold or Hot Wire Feed (GTAW)								
Travel Speed								
Maximum Heat Input								
Technique	—	—	—	—	—	—	—	—
Stringer or Weave								
Multi or Single Pass (per side)								
Oscillation (GTAW Mech./Auto.)								
Traverse Length								
Traverse Speed								
Dwell Time								
Peening								
Interpass Cleaning								
Other								

Form M-2 (See http://go.aws.org/D1forms)

Fig. 8-2. Sample WPS form from AWS.

A simple yet elegant use of AESS in suburban Phoenix.

Chapter 9
Quality of the Welded Connection

9.1 INTRODUCTION

A welded connection must be of an appropriate quality to ensure that it will satisfactorily perform its function over its intended service life. When discussing weld quality, the term, welded connection, has been used because welding-related discontinuities can occur in the weld, in the heat affected zone (HAZ), or in the unaffected base metal. Thermally cut edges may also contain discontinuities that may affect the serviceability of steel structures.

Quality is directly related to the purpose the welded connection must perform. Codes or contract documents define the required quality level for a specific project. A weld that meets those requirements is therefore a quality weld. Because the acceptance criteria may vary from one application to another, it follows that a specific weld with a specific quality level may be acceptable in one application but unacceptable in another.

This chapter will address welding and thermal cutting quality-related topics. The discussion of base metal quality issues will be limited to that related to welded connections and thermally cut edges.

9.2 DISCONTINUITIES AND DEFECTS

A discontinuity is "an interruption of the typical structure of a material, such as a lack of homogeneity in its mechanical, metallurgical, or physical characteristics. A discontinuity is not necessarily a defect" (AWS, 2010d). This definition is somewhat problematic whether applied to welds or base metals. Welds are inherently nonhomogeneous with grain structures that are very directional. Multipass welds have very complex and nonhomogeneous grain structures. Base metals have different mechanical, metallurgical and chemical compositions through the thickness of the steel. Variations such as these are not normally considered discontinuities but would be so identified from the cited definition; however, this definition was used to identify the fact that discontinuities are not necessarily defects. A defect is "a discontinuity or discontinuities that by nature or accumulated effect… render a part or product unable to meet minimum applicable acceptance standards or specifications. This term designates rejectability" (AWS, 2010d). A weld with a discontinuity may or may not be acceptable, whereas a weld with a defect is automatically unacceptable. All welds contain discontinuities, but quality welds contain no defects. The term discontinuity does not imply that the imperfection is not a defect; all defects are also discontinuities.

9.3 AWS D1.1 AND QUALITY

The quality philosophy of AWS D1.1 is stated in clause 6.8 and summarized as follows: "The fundamental premise of the code is to provide general stipulations applicable to most situations" (AWS, 2015c). These general stipulations include acceptance criteria for welds. For most building construction in the United States, AWS D1.1 is the standard that is used to determine whether a given weld is acceptable or not.

In general, the AWS D1.1 criteria are based upon the quality level achievable by a qualified welder, which does not necessarily constitute a lower boundary of suitability for service. If the weld quality necessary for each type of weld and loading condition were specified, widely varying criteria of acceptable workmanship would be required. Moreover, AWS D1.1, clause C-6.8, states that acceptable weld quality in some cases would be less rigorous than what would normally be produced by a qualified welder. Accordingly, the standards in AWS D1.1 are primarily workmanship standards, not fitness-for-purpose standards.

In most cases, AWS D1.1 provides universal quality criteria that apply to all work done under the code. In some cases, the criteria are applicable for only certain situations, such as for cyclically loaded members. These differences in acceptable weld quality levels reflect more than merely the aforementioned workmanship standard, but also incorporate serviceability requirements.

Because AWS D1.1 provides stipulations that are of general applicability and because some structures may require specialized requirements, clause C-6.8 permits the engineer to establish alternate acceptance criteria. Such criteria can be either more or less rigorous, depending on the needs of the structure. Alternate acceptance criteria are required to be listed in the contract documents.

9.4 FITNESS-FOR-PURPOSE CRITERIA

Fitness for purpose, also called suitability for service, can be defined as "…the right level of material…and fabrication quality…for each application…, having regard to the risks and consequences of failure; it may be contrasted with the best quality that can be achieved within a given set of circumstances, which may be inadequate for some exacting requirements and needlessly uneconomic for others which are less demanding" (Barsom and Rolfe, 1999). While AWS D1.1 does not require "the best quality that can be achieved," the workmanship based quality standards contained in the code stands in contrast to the fitness-for-purpose concept.

For most new construction work, the workmanship-based criteria as contained in AWS D1.1 is used to determine the required weld quality. There are special situations, however, where a fitness-for-purpose criteria may be a good alternative to the standard acceptance criteria in D1.1. Lack of conformance to the workmanship based criteria does not mean the weld will be unsatisfactory in service. AWS D1.1, clause C-6.8, states that the criteria in clause 5 should not be considered a boundary of suitability for service. When the use of fitness-for-purpose criteria is desired, the latitude extended to the engineer by AWS D1.1, clause C-6.8, can be used. The basis for such acceptance criteria can be "experience, experimental evidence or engineering analysis considering material type, service load effects, and environmental factors."

To illustrate the concept, consider undercut (discussed in Section 9.5.2 of this Guide). For statically loaded applications, AWS D1.1, Table 6.1, limits undercut to 1/32 in. (1 mm) for 1-in.- (25 mm) thick material, with the exception that undercut is allowed to be up to 1/16 in. (2 mm) for any accumulated length up to 2 in. (50 mm) in any 12 in. (300 mm). This criterion applies whether the undercut is parallel or perpendicular to the direction of load application, regardless of the load in the weld or the load in the plate. It may be more responsible to permit undercut up to 1/16 in. (2 mm) for the full length of the weld rather than require weld repair when undercut is parallel to the direction of stress; the weld sizes are based not on the level of stress, but rather on the minimum weld size for the thicknesses of the steel.

9.5 TYPES OF WELDING-RELATED DISCONTINUITIES

Welding-related discontinuities can be broadly grouped into two categories: planar and volumetric. Planar discontinuities include cracks, tears and regions of incomplete fusion. Volumetric discontinuities include porosity, slag intrusions and undercut. These two broad categories of discontinuities will be considered separately.

9.5.1 Planar Discontinuities

Planar discontinuities are essentially two-dimensional imperfections and include all cracks, tears and fusion-related problems. These are the most serious types of discontinuities because fractures can initiate from these two dimensional imperfections when the weldment is loaded perpendicular to the planar discontinuity.

Incomplete Fusion

Incomplete fusion is "a weld discontinuity in which fusion did not occur between the weld metal and the fusion faces or the adjoining weld beads" (AWS, 2010d). Incomplete fusion, as shown in Figure 9-1, is the result of the molten weld metal not fusing with the base metal or with previously deposited weld passes. Incomplete fusion may be called lack-of-fusion (LOF), or it may be referred to as cold lap.

Incomplete fusion may be caused by many factors. For example, welding on materials with excessive mill scale may cause this discontinuity. An improperly selected or improperly prepared weld joint detail may inhibit good fusion. Incomplete fusion can occur when the welder is unable to position the electrode properly with respect to the joint, whether due to limited access or poor skill. Incomplete fusion is often caused by the use of improper welding parameters. Gas metal arc welding-short circuit arc (GMAW-S) is known for its tendency to generate incomplete fusion (see Section 2.6 of this Guide). For other processes, extremes in amperage and travel speed, both high and low, can result in these fusion discontinuities.

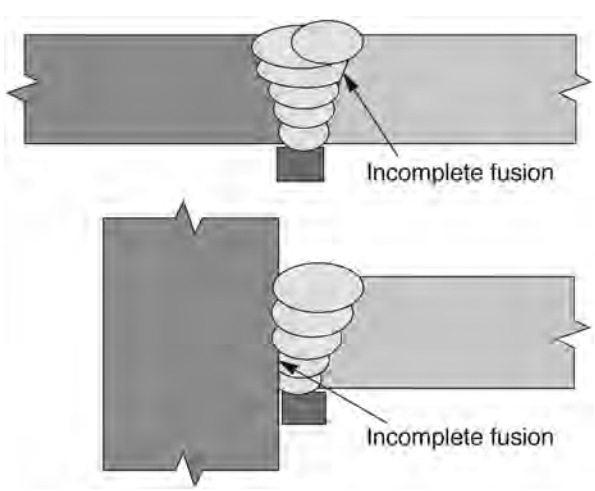

Fig. 9-1. Incomplete fusion.

Incomplete fusion in the root of a complete-joint-penetration (CJP) groove weld is a defect, but incomplete fusion in the root of a properly made PJP groove weld is an acceptable discontinuity.

Incomplete Joint Penetration

Incomplete joint penetration is "a joint root condition in a groove weld in which weld metal does not extend through the joint thickness" (AWS, 2010d). Incomplete joint penetration, also called lack of penetration, has various causes. For a CJP groove weld like that shown in Figure 9-2, incomplete joint penetration may be the result of improper backgouging of the double-sided joint detail. For joints where a prescribed amount of penetration is specified, incomplete joint penetration may be the result of incorrect electrode placement, an improper welding procedure (typically with low current levels), or an improperly prepared joint.

Overlap

Overlap is "the protrusion of weld metal beyond the weld toe or weld root" (AWS, 2010d). While the overlap itself is volumetric, the discontinuity it creates is planar. Overlap is an example of an incomplete fusion discontinuity that occurs on the surface of the steel as shown in Figure 9-3.

Overlap tendencies may be aggravated by the presence of thick mill scale but are more often associated with improper procedures or techniques. Excessively low travel speeds may cause the molten puddle to roll ahead of the arc, resulting in overlap. Often, welds with overlap can be corrected by carefully removing the overlapped weld metal by grinding. While shown in a groove weld in Figure 9-3, overlap can occur in fillet welds as well.

Cracks

A crack is "a fracture-type discontinuity characterized by a sharp tip and a high ratio of length and width to opening displacement" (AWS, 2010d). Cracking is covered extensively in Chapter 6 of this Guide.

Lamellar Tearing

A lamellar tear is "a subsurface terrace and step-like crack in the base metal with a basic orientation parallel to the wrought surface created by tensile stresses in the through-thickness direction of the base metals weakened by the presence of small disperse, planar-shaped, nonmetallic inclusions parallel to the metal surface" (AWS, 2010d). The topic is covered extensively in Section 6.4 of this Guide.

Laminations and Delaminations

Laminations and delaminations are planar base metal discontinuities lying parallel to the surface of the steel. The term *lamination* is used when there is essentially no gap between the two surfaces of the planar discontinuity. When the surfaces open up and a gap is formed, the term *delamination* is used. Laminations and delaminations typically occur in the mid-thickness of the steel, whereas lamellar tearing occurs during welding and is usually located just outside the HAZ, generally within ¼ in. (6 mm) of the steel surface. Laminations may be detected when the material is thermally cut. Nondestructive testing can be used to detect laminations. ASTM A435 *Standard Specification for Straight-Beam Ultrasonic Examination of Steel Plates* (ASTM, 2016) and ASTM A898 *Standard Specification for Straight Beam Ultrasonic Examination of Rolled Steel Structural Shapes* (ASTM, 2017b) provide guidance on inspection methods used to detect laminations or delaminations.

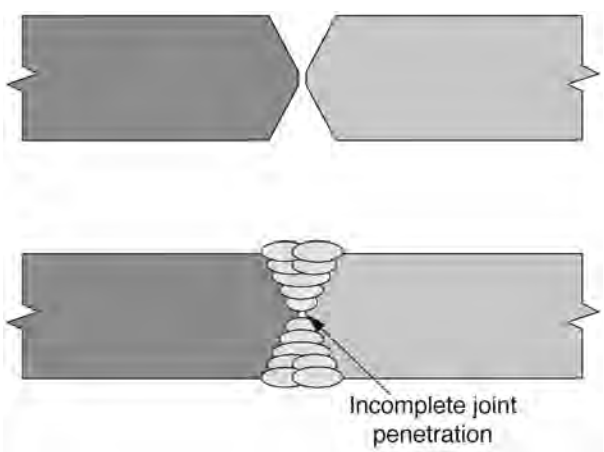

Fig. 9-2. Incomplete joint penetration.

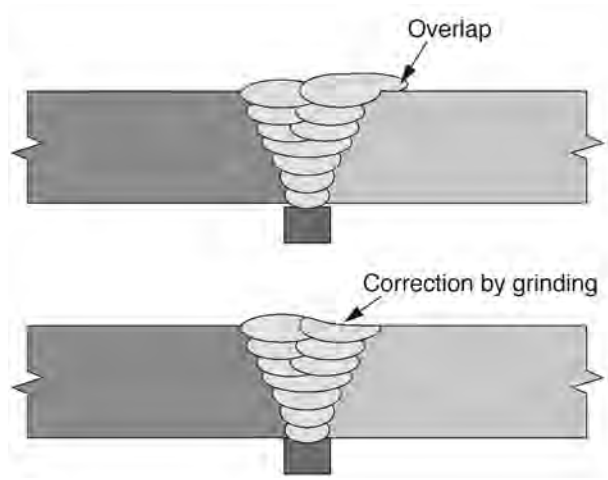

Fig. 9-3. Overlap.

Plates or shapes that contain laminations and delaminations may be acceptable for service when the discontinuity is parallel to the stress field. Conversely, when the discontinuity is perpendicular to the stress field, careful investigation into the extent of such planar discontinuities is warranted; extensive discontinuities under such conditions justify rejection of the material. When laminations or delaminations are discovered early in the fabrication process, the material can be rejected with minimal consequence. Unfortunately, such indications are often discovered late in the fabrication or erection sequence, and the suitability of the fabricated material should be made on a case-by-case basis.

9.5.2 Volumetric Discontinuities

Volumetric discontinuities are three-dimensional imperfections located in and around the weld. Some volumetric discontinuities have rounded or blunted edges that created a less severe stress raiser than the crack-like edges of planar discontinuities. As such, AWS D1.1 permits some volumetric discontinuities to be accepted and left uncorrected. This acceptance depends on the type of weld, type of loading, size, frequency, spacing of the discontinuities, and other factors.

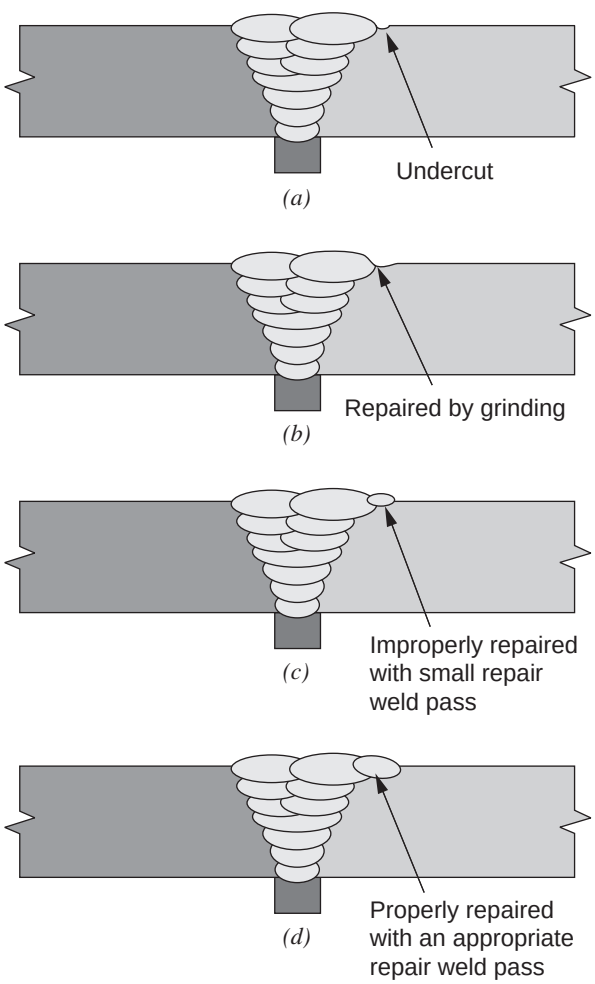

Fig. 9-4. Undercut and proper repair methods.

Undercut

Undercut is "a groove melted into the base metal adjacent to the weld toe or weld root and left unfilled by weld metal" (AWS, 2010d), as shown in Figure 9-4. AWS D1.1, Table 6.1, provides acceptable limits for undercut as a function of the length, depth, orientation, and type of loading (static and cyclic). Excessive undercut is usually associated with poor welding procedures or techniques, such as improper electrode placement, high arc voltage, or the use of improper welding consumables.

Minor undercut may be repaired by careful grinding to reduce any notch-like feature of the undercut as shown in Figure 9-4(b). While not specifically endorsed by AWS D1.1, the concept is similar to repair of small edge discontinuities as addressed in clause 5.14.8.4. The loss of cross section should not exceed 2%. Undercut may also be repaired by welding. Because only a small amount of weld metal is required to fill the undercut void, there is a tendency to make very small repair welds that may introduce additional problems such as cracking or hardening in the HAZ, as shown in Figure 9-4(c). Repairs that involve welding should utilize welding procedures that comply with production welding requirements, including preheat temperatures and adequate welding heat input levels as illustrated in Figure 9-4(d). When undercut is properly repaired by welding, the repaired region inevitably has a weld that is substantially larger than the required size.

Porosity

Porosity refers to "cavity-type discontinuities formed by gas entrapment during solidification…" (AWS, 2010d). Porosity assumes the form of spherical or cylindrical cavities in the weld and is shown in Figure 9-5. Porosity may be surface-breaking or may be internal to the weld.

Porosity occurs as the result of inadequate shielding of the weld metal or excessive contamination of the weld joint, or both. The products used for shielding weld deposits (gases, slags) must be of appropriate quality, properly stored, and delivered at the correct rate to provide adequate shielding. Excessive surface contamination from oil, moisture, rust or mill scale increases the demand for shielding. Porosity can be minimized by providing proper shielding and ensuring joint cleanliness. For shielded metal arc welding (SMAW), long arc lengths can cause porosity as can electrodes with wet coatings. For gas metal arc welding (GMAW) and gas-shielded flux-cored arc welding (FCAW-G), leaks in the

shielding gas hoses can contaminate the shielding gas and lead to porosity. Inadequate shielding gas flow rates or disruption of the gas shield can also cause porosity. For self-shielded flux-cored arc welding (FCAW-S), excessive arc voltages or short electrode extensions can cause porosity. For submerged arc welding (SAW), a common cause of porosity is contaminated flux, particularly when flux is reclaimed.

To repair welds with excessive porosity, the weld metal that contains the porosity should be removed, and that portion of the weld replaced. AWS D1.1, Table 6.1, defines acceptable limits for porosity as a function of its type, size, distribution, and type of loading.

Slag Intrusions

A slag intrusion is "a discontinuity consisting of slag in weld metal or along the weld interface" (AWS, 2010d), as shown in Figure 9-6. Slag intrusions are often referred to as slag inclusions. Slag intrusions are generally attributed to slag from previous weld passes that was not completely removed before subsequent passes were applied. Slag intrusions in completed welds are typically detected by nondestructive testing, not visual inspection.

With proper weld joint designs, welding procedures, and techniques, slag can be easily removed from the joint, mitigating the formation of slag intrusions. However, when welding conditions are suboptimal, slag removal may be difficult. The typical location for trapped slag is at weld toes. Careful grinding of weld toes before the application of a subsequent weld pass is effective in minimizing the possibility of slag intrusions.

Excessive Concavity

Concavity refers to the profile of the surface of the weld as shown in Figure 9-7. Concavity is considered excessive when it exceeds the limits in AWS D1.1, clause 5.23, or

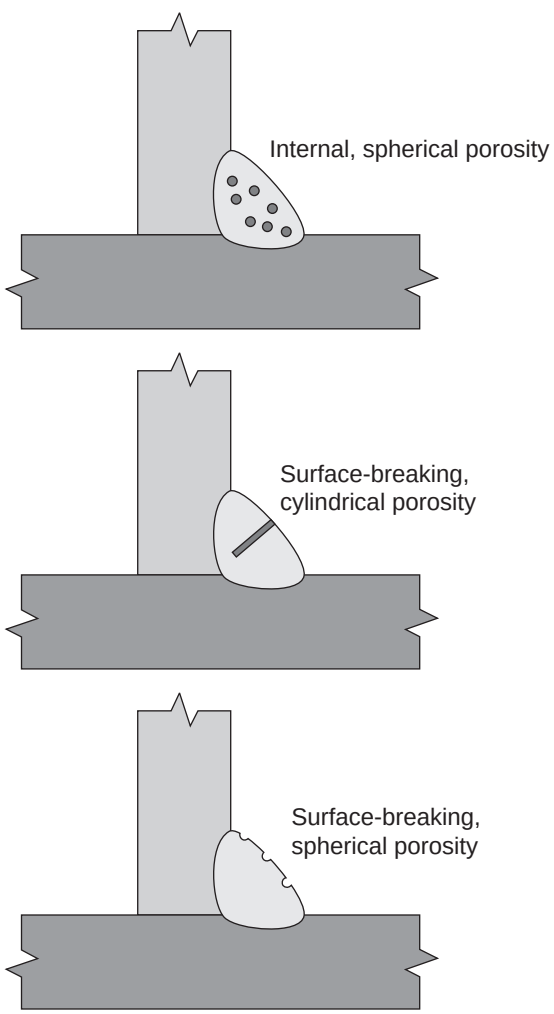

Fig. 9-5. Types of porosity.

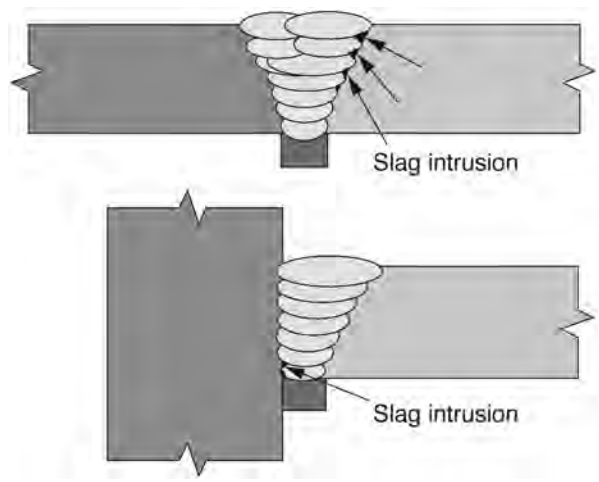

Fig. 9-6. Slag intrusions.

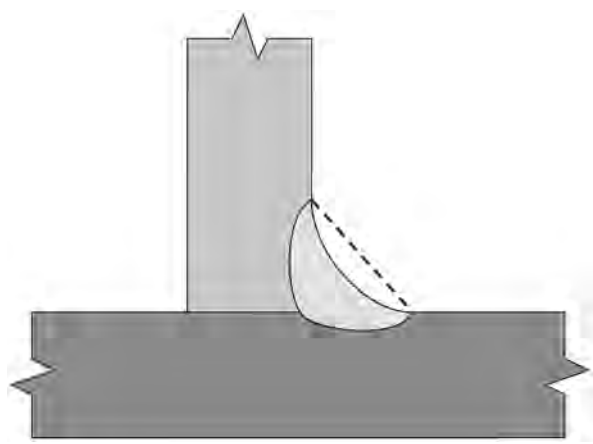

Fig. 9-7. Excessive concavity.

when the required weld throat is not achieved. Excessive concavity can lead to centerline cracking (see Section 6.3.1 of this Guide), but cracking is a separate issue from concavity. Excessive concavity is typically caused by an improper welding procedure or welding technique. Reducing the welding current and voltage where applicable will usually remedy this problem. The primary concern with a concave weld is that the throat may be inadequate. Concave weld surfaces with adequate throats are not a problem. Inadequate weld throats created by excessive concavity are easily fixed by simply depositing another weld pass on the concave surface.

Excessive Convexity

Convexity is considered excessive when it exceeds the limits presented in AWS D1.1, clause 5.23. As shown in Figure 9-8, excessive convexity wastes weld metal, and may increase the stress raiser at the weld toe if the stress field is perpendicular to the weld axis. In most cases for static building applications, excessive convexity is primarily a visual concern only. Improper procedures and technique are generally responsible for this condition.

For welds made with excessive convexity, corrective measures typically involve removal of the excessive metal by grinding. However, removal of excessive weld metal from the face, while correcting the excessive convexity issue, will do nothing to correct for the stress raiser at the weld toe as shown in Figure 9-9. If improvement of the weld toe is necessary, the toe region should be ground to smoothly transition from the base metal to the weld, and such measures are typically justified only when the structure is subject to cyclic loading.

Inadequate Weld Size

Welds may be too short or too small for a given application. Undersized welds are typically indicative of workmanship or procedural problems, often resulting from travel speeds that are too high. AWS D1.1, Table 6.1, permits welds to be undersized within certain limits and at certain locations. Undersized welds are repaired by depositing additional metal to the undersized weld. The repair weld should be of a size and length that is conducive to good practice.

Underfilled Weld Craters

An underfilled weld crater is a concave depression at the end of the weld, and in this localized area the weld throat is reduced. Underfilled weld craters are typically due to workmanship or procedural problems. Normally, a slight pause at the end of a weld can fill a weld crater. AWS D1.1, Table 6.1, requires all weld craters to be filled, except for at the ends of intermittent fillet welds where the required weld length is achieved without a crater.

The two potential detrimental effects of underfilled weld craters are development of cracks with a star-like pattern or an inadequate weld throat. Underfilled weld craters can be

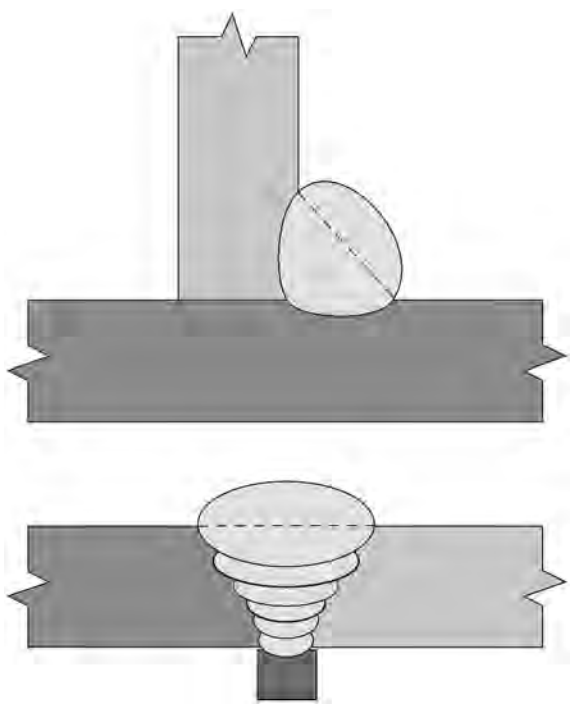

Fig. 9-8. Excessive convexity.

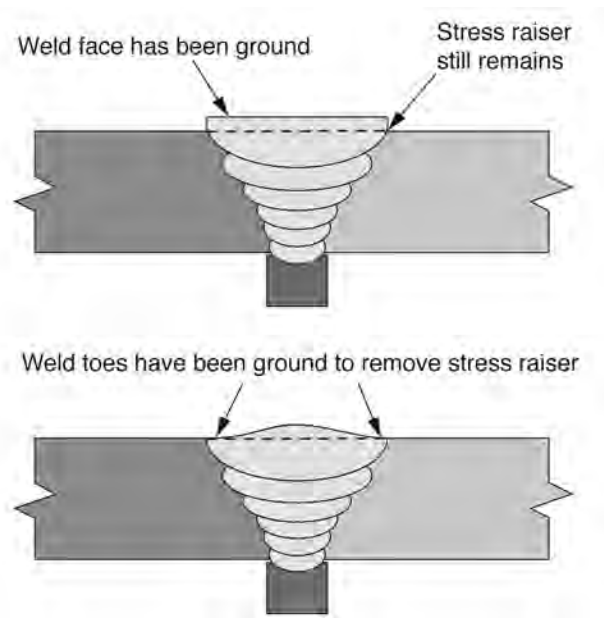

Fig. 9-9. Repair of excessive convexity.

repaired by depositing additional metal in the crater. However, simply applying a localized spot of metal in the crater is likely to do more harm than good. Welds with underfilled but uncracked weld craters may be suitable for service in some situations, but in others, the end of the weld may be the most severely loaded portion of the weld. Crater cracks should be repaired by removal of the cracked portion by grinding and replacing the removed material with sound metal.

Spatter

Spatter is defined as "the metal particles expelled during fusion welding that do not form part of the weld" (AWS, 2010d). Spatter consists of the roughly spherical particles of molten weld metal that fuse to the base metal outside the weld joint or to the weld metal surface. Spatter is generally not considered to be harmful to the performance of welded connections. However, excessive spatter may inhibit proper ultrasonic testing, is generally unacceptable for architecturally exposed structural steel (AESS) projects, and may affect the integrity of coating systems. In all cases, excessive spatter is indicative of less than optimum welding conditions and suggests that the welding consumables and/or welding procedures may need to be adjusted.

Loose spatter is easily removed by scraping, while more tightly adhering spatter can be chiseled or ground off. AWS D1.1, clause 5.29.2, puts no limit on spatter, except that it cannot interfere with NDT. For AESS projects, spatter removal is typically required.

Arc Strikes

An arc strike is "a discontinuity resulting from an arc, consisting of any localized melted metal, heat-affected metal, or change in the surface profile of any metal object" (AWS, 2010d). Arc strikes are caused by inadvertent arcing between electrically charged elements of the welding circuit and the base metal. Welding arcs that are initiated outside the joint leave behind these arc strikes. SMAW is particularly susceptible to creating arc strikes, because the electrode holder is electrically hot (i.e., energized) when not welding. For any of the welding processes, arcing of work clamps to the base metal can cause arc strikes, and welding cables with damaged insulation can result in arc strikes. Welding cables should be insulated and in good condition. Proper welding practices minimize arc strikes.

Arc strikes should be avoided; when arc strikes do cause cracks or blemishes, AWS D1.1, clause 5.28, requires that they be ground smooth and checked to ensure soundness. Removal of the affected metal by grinding will eliminate any potential harm from arc strikes. This includes the formerly melted metal as well as any hardened HAZ.

9.6 METALLURGICAL DEFICIENCIES

Welds are expected to have certain mechanical properties and, to some extent, certain chemical compositions. Failure of welds to achieve these conditions can be described as metallurgical deficiencies. All of the discontinuities discussed in Section 9.5 of this Guide are detectable, although some can be identified only with destructive or nondestructive testing. Unfortunately, there are no practical ways to directly verify that the deposited weld metal will have all the required metallurgical properties. Fortunately, by identifying and controlling variables that affect the properties of deposited welds, the process by which the weld is made can be controlled and in turn, the weld metal metallurgical properties can be controlled.

The mechanical properties of a weld are primarily dependent on the chemical composition of the weld deposit, the rate of cooling experienced by the weld, and any subsequent thermal treatment the weld receives. Control of the chemical composition of the weld depends on two primary elements: welding on base metal of a known composition and using the proper filler metals. Cooling rates depend on the amount of thermal energy introduced into the joint (preheat temperature, heat input, etc.) and how much material is available to conduct the energy away (material thicknesses and configurations). While there are many factors involved these factors can all be monitored and controlled easily.

For structural steel applications, the chemical composition of the deposited weld metal is not a major concern, with the exception of welds on weathering steel (see Section 5.4.1 of this Guide). Even in this case, the precise chemical composition is not critical. Mechanical properties pose the greater concern for structural applications. The required yield and tensile strengths are routinely achieved unless actual welding parameters deviate significantly from the prescribed values or incorrect electrodes are used. Fracture toughness, typically measured with the CVN specimen, is perhaps the most variable mechanical property in deposited weld metal. For applications where welds are expected to exhibit certain levels of fracture toughness, the use of proper welding parameters is even more important. Particular focus on those factors that affect weld cooling rates such as preheat, interpass temperature and heat input, is warranted in such situations.

The primary means used to ensure weld quality is through control of the process of welding. In this context, process does not refer to the welding process (i.e., SMAW, FCAW), but the start-to-finish control of all the variables that may affect the quality of the weld. These controls include the inspection checklist items as contained in AISC *Specification* Tables N5.4-1, N5.4-2 and N5.4-3.

9.7 TYPES OF BASE METAL DISCONTINUITIES

9.7.1 Base Metal Quality

The quality of the steel used in welded construction is typically governed by ASTM A6/A6M, where Part 9.1 requires the structural steel to be "free of injurious defects and shall have a workmanlike finish" (ASTM, 2016). The steel is permitted to have "noninjurious surface or internal imperfections, or both…" according to ASTM A6/A6M, Note 4. These conditions apply to the steel in the as-received condition. Cracks may form during bending, shearing and thermal cutting of the steel; such cracks are not cause for material rejection, although the material may no longer be suitable for service. Grinding and blasting may reveal surface imperfections; injurious defects revealed in this case would constitute grounds for material rejection. Of course, the operative term, *injurious*, is subject to interpretation. It should be noted that hot-rolled steel, particularly when finely ground or polished, will contain a variety of imperfections; noninjurious surface imperfections should be expected.

ASTM prescribes conditions for repairs that can be made at the mill, including grinding and repair welding. Shallow imperfections can be corrected by grinding, providing the depth does not exceed prescribed limits. Repair by welding is permitted by ASTM A6/A6M, Parts 9.2 to 9.4, for deeper imperfections that do not exceed specified limits. Welding requirements are also specified in ASTM A6/A6M, Part 9.5. AWS D1.1 does not impose any additional base metal quality requirements beyond those specified for the steel in ASTM.

AWS D1.1, clause 5.14.2, stipulates that welds are not permitted to be made on "…fins, tears, cracks, slag, or other base metal defects as defined in the base metal specifications." When a defect in the steel is welded upon, the expansion and contraction that will occur during welding will likely exacerbate the defect that was present before welding.

Suspect areas on the surface of the steel can be easily evaluated by localized grinding. The edge of the imperfection is readily detected while grinding because the thin edge will heat and may turn red in color; after grinding, the edge will usually be discolored as a result of the oxidation of the heated metal.

Larger discontinuities can be removed and repaired by welding. Limits to the extent to which such repairs can be made are contained in AWS D1.1, clause 5.14.5. Welded repairs to correct for base metal defects are addressed in Section 15.8 of this Guide.

9.7.2 Quality of Thermally Cut Edges

Although thermally cut edges can be grouped into two major categories—edges that will become part of a welded connection and those that are simply the edge of a part—the quality requirements for both types of thermally cut edges are the same.

Weld access holes and reduced beam section (RBS) cuts are specific examples of thermally cut surfaces that are not welded upon; these applications are addressed in Sections 4.4.2, 11.8.1 and 11.8.2 of this Guide.

The quality of cut edges is governed by surface roughness requirements and the size of inclusions that might be revealed on the cut edge. The roughness requirements are listed in AWS D1.1, clause 5.14.8.3. Reference is made to C4.1-77, which is a plastic sample with replications of four thermally cut surfaces labeled 1, 2, 3 or 4, with 1 being the roughest surface. While visual comparison is discussed in the code, tactile comparison is the common practice. Properly prepared thermally cut edges are not required to be ground according to AWS D1.1, clause 2.17.4. Cut surfaces may have occasional notches or gouges. AWS D1.1, clause 5.14.8.4, provides three categories for dealing with gouges:

- Gouges less than 3⁄16 in. (5 mm) are to be removed by grinding or machining.
- Gouges exceeding 3⁄16 in. (5 mm) may be repaired by grinding if the nominal cross section is not reduced by more than 2%. Such grinding is to be faired to the original surface by a slope of not less than 1 in 10.
- Gouges that require welding require the approval of the engineer. AISC *Specification* Section M2.2 permits repair by welding to gouges deeper than 3⁄16 in. (5 mm) without requiring engineer approval.

When steel is severed, the cut edge may reveal the presence of inclusions or laminations, referred to as mill induced discontinuities. These discontinuities are essentially planar and parallel to the surface of the steel; as a result, they will appear as a line on the cut edge. AWS D1.1, Table 5.4, defines how edge discontinuities are to be handled. Depending on the length of the discontinuity, some are accepted as is without corrections, others are repaired by removal by grinding only, while others are ground and repaired by welding. When edge indications are long and deep, ultrasonic testing of the plate is required to determine the extent of the discontinuity.

An important note in AWS D1.1, clause 5.14.5.2, deals with repairs to discontinuities discovered on cut edges, stating that the provisions listed "…may not be adequate in cases of tensile loads applied through the thickness of the material." In such loading cases, further investigation into the extent of lamellar indications is warranted.

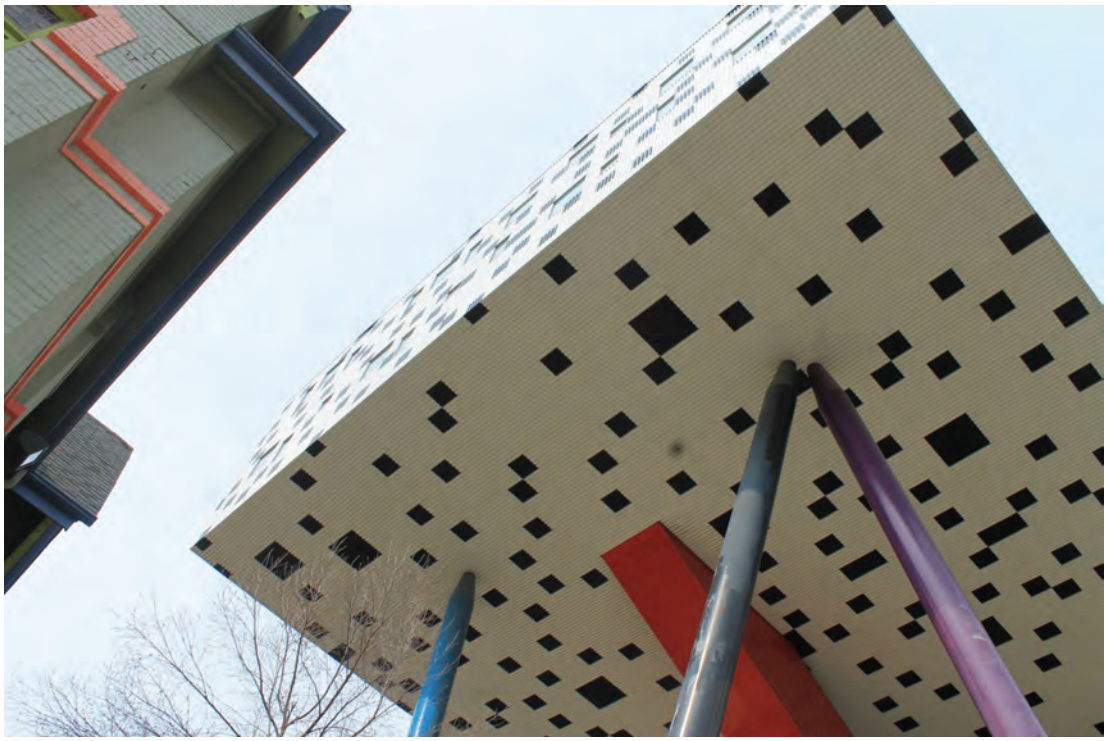

AESS columns with welded cast steel nodes at a university project in Toronto.

Chapter 10
Weld Inspection

10.1 INTRODUCTION

Welds are inspected to ensure that they comply with the requirements of a given specification. Weld inspection fits into two broad categories: destructive and nondestructive. Destructive testing typically involves machining test specimens from a weldment, applying a force, and measuring the response of the test specimen to the force; after this, the weldment is no longer useful for the intended service. Destructive testing is applied to welding procedure qualification test plates, and may include tensile testing, Charpy V-notch (CVN) testing, and bend tests. In contrast to destructive testing, nondestructive testing (NDT) allows for examination of the weld without affecting the ability of the weld to function in the intended service.

Welder qualification testing and welding procedure qualification testing as prescribed in AWS D1.1 have both nondestructive and destructive testing requirements. For production welds, the AISC *Specification* (AISC, 2016d) prescribes both visual inspection requirements and nondestructive tests. Connection configurations designed to resist seismic loading may be subject to destructive testing in laboratory tests before they are used on an actual project. Visual inspection is generally considered to be a form of nondestructive testing, but for this chapter, visual inspection will be discussed separately from NDT.

Many NDT methods exist, but for structural steel inspection only a few are commonly used; these methods will be discussed in this chapter.

10.2 VISUAL INSPECTION

Visual inspection (VT), also called visual testing or visual examination "…is a nondestructive method whereby a weldment, the related base metal, and particular phases of welding may be evaluated in accordance with applicable requirements. All visual examination methods require the use of eyesight to evaluate the conditions which are present; hence, the term visual examination" (AWS, 2015b). As implied by the term, VT can only detect what can be visually observed. For completed welds, this limits the method to detection of discontinuities that are on the surface or are surface breaking. This has caused some to discount the value of VT. However, the power of VT lies in the ability to examine particular phases of welding. Alternately stated, VT allows for examination of the whole process of welding from start to finish. AWS B1.11, *Guide for the Visual Examination of Welds* (AWS, 2015b), provides a useful expansion on the topic of VT.

AWS D1.1, clause 6.9, requires that all welds are visually inspected. This includes welds that are subject to other nondestructive testing as well, and VT should be performed before NDT. Ironically, it is common to find welds that meet NDT requirements, which focus on internal quality, and yet fail visual acceptance criteria that is solely focused on surface conditions. When properly performed, VT is the most powerful inspection methodology. VT is the only inspection method that can actually improve the quality of a given weld. For example, visual inspection of the weld joint preparation and the adequacy of the root opening dimension can ensure that conditions conducive to obtaining good fusion are present before welding begins, minimizing the probability of incomplete fusion in the completed weld.

To be effective, visual inspection must take place before, during and after welding. The before and during aspects are often overlooked. Fortunately, with the incorporation of Chapter N into the AISC *Specification,* the concepts of before, during and after inspection are duly emphasized. Chapter N contains three tables that outline specific tasks that are to be performed: Table N5.4-1 for tasks to be done before welding; Table N5.4-2 for tasks to be done during welding; and Table N5.4-3 for tasks to be done after welding. Most of the tasks involve visual inspection and most are assigned to the quality control inspector (QCI), the individual designated to perform quality control inspection tasks for the fabricator or erector.

While specific VT responsibilities are assigned to both the quality control (QC) and quality assurance (QA) inspectors, everyone associated with welding on a project can, and should, participate in VT, including welders and foremen. With VT, minor irregularities can be detected and corrected during the fabrication process, precluding the need for more expensive and complicated repairs after the weld is complete.

"Before" welding tasks include verifying that welders are qualified, that WPS are available, that the joint is properly fit, and that the welding equipment is suitable for the application. "During" welding tasks include adhering to the WPS, including preheat requirements, cleaning between weld passes, and confirming the quality of each pass. "After" welding tasks include checking the weld size and examining the weld for cracks, porosity and undercut. These examples are illustrative and not exhaustive; the AISC *Specification* and AWS D1.1 provide a comprehensive list of required VT tasks.

VT relies on eyesight, and two implications follow: The inspector's vision (with correction, if necessary) must be good, and there must be sufficient light present. AWS D1.1,

clause 6.1.4.4, requires eye examinations for inspectors and simple flashlights can be used to provide illumination in dimly lit situations.

10.3 NONDESTRUCTIVE TESTING—GENERAL

NDT, which may also be called nondestructive examination (NDE), is "the process of determining acceptability of a material or a component in accordance with established criteria without impairing its future usefulness" (AWS, 2015c). While NDT is an important element of many quality programs, it cannot replace in-process or after-the-fact visual inspection. Before NDT is performed, AWS D1.1, clause 6.9, requires that the welds first meet visual acceptance criteria (AWS, 2015c). Because of the diversity of projects that can be governed by AWS D1.1, it is impossible for a single document to specify all appropriate inspection requirements for all projects, including the extent and type of NDT to be performed, acceptance criteria, and who is responsible for various inspection tasks. AWS D1.1, therefore, relies on the engineer to specify such NDT requirements. In contrast, the AISC *Specification* has a more limited scope of applications, and since 2010, Chapter N has codified NDT requirements.

A variety of NDT methods are available to inspect welds, each with advantages and limitations. The four inspection methods most commonly used along with VT to inspect structural steel welds are discussed in the following sections.

10.4 PENETRANT TESTING

Penetrant testing (PT) is an NDT method that relies on the ability of low viscosity liquid (i.e., the penetrant) to be drawn into a void or crevice by capillary action and be retained while the excessive liquid is removed; a developer is used to reveal locations where the penetrant has been held, as shown in Figure 10-1. The process is also known as liquid penetrant testing, dye penetrant testing, or simply dye-pen. PT can detect only surface-breaking discontinuities. Two types of penetrants are available: visible dye, meaning it can be seen in ambient light, or fluorescent, requiring the use of an ultraviolet light. Fluorescent penetrants are more sensitive to visual detection, thus allowing for a more detailed inspection; however, the part being inspected must be in a darkened room or enclosure where it can be viewed with an ultraviolet light. For structural steel applications, therefore, visible penetrants are typically used. Practices for PT are prescribed in ASTM E165 *Standard Practice for Liquid Penetrant Examination for General Industry* (ASTM, 2016) and AWS D1.1, clause 6.10. In the 2016 AISC *Specification*, PT is not prescribed for any application. Prior to the 2016 edition, the AISC *Specification* required either magnetic particle testing or penetrant testing of weld access holes in heavy rolled sections and heavy built-up shapes; this required NDT was deleted in 2016.

PT enables detection of small surface-breaking discontinuities that might be overlooked or undetectable with visual inspection. The required materials for PT are inexpensive and the basic training required to use the process is minimal. PT can be used on magnetic or nonmagnetic materials; it is often the inspection method of choice for nonmagnetic stainless steel or aluminum. When a record of PT inspection is desired, the inspected area can be photographed.

Despite the simplicity of the NDT process, PT must be used correctly to be effective. The part must be relatively clean before inspection; if the voids are filled with

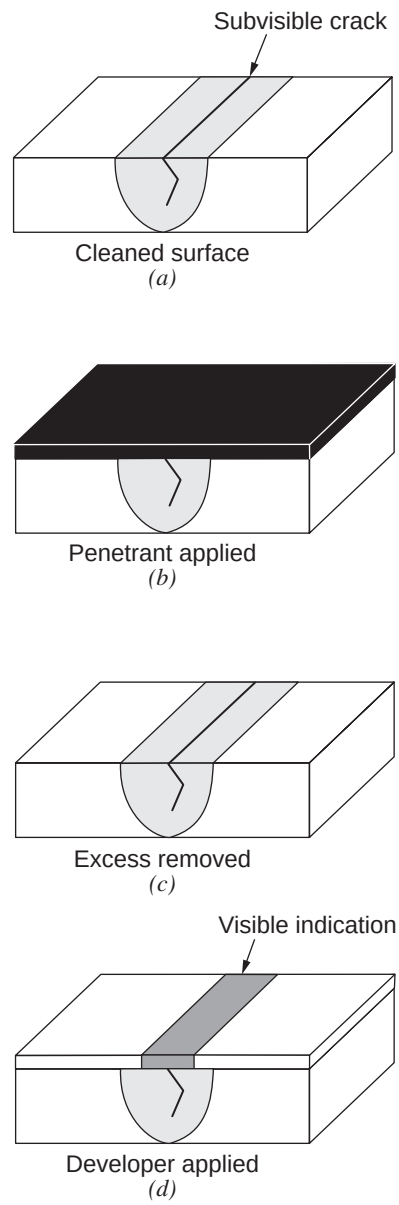

Fig. 10-1. Penetrant testing: (a) cleaning; (b) penetrant application; (c) removal of excess penetrant; (d) application of developer.

contaminants (including the possibility of being filled with cleaning fluids), the penetrant will not be drawn into the discontinuity. After the penetrant is applied, sufficient time must elapse—typically 10 to 15 minutes—to allow for the penetrant to enter into the void. Next, the excess penetrant must be removed, making certain to not remove penetrant that may be in the voids. If the surface is flushed with cleaner, the penetrant can be washed from the cavity. Therefore, only wiping of the surface is permitted. However, if the excessive penetrant is not removed, nonrelevant indications will be observed later. After the excessive penetrant is removed, the developer is applied, and sufficient time must elapse to allow for the penetrant to stain the developer. Most developers are white in color, providing a distinct contrast to the dye, which is typically red; indications of weld discontinuities are pink under such circumstances. When inspection is completed, the developer is typically removed from the inspection zone. Even when properly applied, the process can be time consuming and messy.

PT, particularly when applied to welds, is notorious for revealing insignificant geometric irregularities. When fillet welds are subject to PT, for example, it is routine for the weld toes to retain some penetrant that will subsequently dye the developer. This condition is the direct result of inadequate cleaning of penetrant from the toes. However, because weld toes are the location for a variety of potential defects including excessive undercut, overlap, underbead cracks and lamellar tearing, indications at the toes of welds cannot be ignored. In some cases, dye at the weld toe may be the result of an actual discontinuity, whereas in other cases it may be due to poor PT techniques. Faint pink indications are usually due to poor techniques, not actual discontinuities. Bold, dark red stains are characteristic of actual discontinuities. To resolve disputes as to what caused the staining of the developer, the part can be reinspected. A common mistake with PT is to apply the dye when the part is still hot. This can cause the dye to boil or burn and thus make it impossible for the dye to enter into any cavity that may be present. For steel construction, magnetic particle testing (MT) is often preferred over PT because of the aforementioned shortcomings, and the ability of MT to detect the same types of discontinuities.

10.5 MAGNETIC PARTICLE TESTING

Magnetic particle testing (MT) is a nondestructive testing method that depends on the change in magnetic flux that occurs when a magnetic field is present in the vicinity of a discontinuity. When the discontinuity is transverse to the magnetic field, and when magnetic powders (i.e., particles) are dusted on the part, the powders will tend to gather where a discontinuity exists. The process is effective in locating discontinuities that are on the surface and slightly subsurface. MT can reveal cracks, incomplete fusion, slag inclusions and porosity. MT can be performed using dry powders or with powders that are suspended in a liquid. Powders may be colored and visible in ambient light or may be fluorescent, requiring the use of an ultraviolet light. For structural steel applications, visible, dry powders are typically used. Practices for MT are prescribed in ASTM E709-14 *Standard Guide for Magnetic Particle Testing* (ASTM, 2016) and AWS D1.1, clause 6.10. In the 2016 AISC *Specification*, MT is not prescribed for any application. Prior to the 2016 edition, the AISC *Specification* required MT or PT (see Section 10.4 of this Guide) of weld access holes in heavy rolled sections and heavy built-up shapes; this required NDT was deleted in 2016.

Permanent magnets can be used to induce the magnetic field, but it is more common to create electromagnetic fields with electrical power (i.e., electromagnets). While there are a variety of ways to create or induce the magnetic field into the item being inspected, two methods are common for structural steel applications: the yoke method and the prod method. Each has advantages and limitations, but most structural steel inspections are done with the yoke method.

The yoke method consists of an electric coil wrapped around a central core; when electric current is applied, a magnetic field is generated that extends from the core, through the articulated legs, and into the part as shown in Figure 10-2. Because the magnetic flux lines run from one leg to the other, discontinuities oriented perpendicular to a line drawn between the legs can be detected, but discontinuities that are parallel to a line between the legs will be missed as can be seen in Figure 10-3. To ensure no discontinuities are missed, after the yoke is used in one position, it is turned 90° to detect discontinuities that were previously undetectable. With the yoke method, all of the current flow is in the yoke; only the magnetic field is induced into the part being inspected. The process is also known as indirect induction.

The prod method uses electrical current that is passed through two prods that are placed in contact with the surface

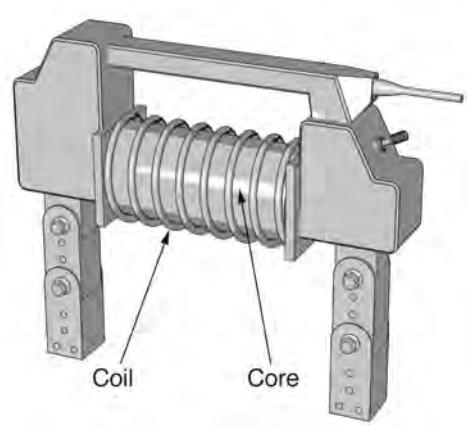

Fig. 10-2. Magnetic particle testing using a yoke.

of the steel as shown in Figure 10-4. When the prods are initially placed on the material, no current is applied. After intimate contact is assured, current is passed from the prod, into the steel, and out the other prod, creating a magnetic field surrounding the electrical current flow. Because the flux lines run perpendicular to the current flow, and because the current flow is from one prod to the other, discontinuities oriented parallel to a line drawn between the prods can be detected, but discontinuities that are perpendicular to a line between the prods will be missed as shown in Figure 10-5. Notice that the orientation of detectable discontinuities with the prod method is just the opposite of that for the yoke method. To ensure no discontinuities are missed, after the prods are used in one position, they are repositioned so the magnetic field is turned 90° to detect discontinuities that were previously undetectable. The prod method is sometimes called direct induction.

A major shortcoming of the prod method is that electrical arcing may occur between the prods and the base material, resulting in an arc strike, which may create a localized brittle zone (see discussion of arc strikes in Section 9.5.2 of this Guide). It is important that the prods be kept in good condition and that intimate contact with the work is maintained before the current is passed through the prods. The prod method does have one advantage over the yoke method—it has a greater ability to detect sub-surface discontinuities. However, the simplicity of the yoke method, with the added advantage of eliminating the potential for arc strikes, has made the yoke method preferred for structural steel applications.

While MT can detect some subsurface discontinuities, it is best viewed as an enhancer of VT. MT is not routinely used as an NDT method for inspecting structural steel welds but is often used when VT or other forms of NDT detect defects that need to be repaired. For example, MT may be used to ascertain the extent of cracking; part of the crack may be obvious, but the full extent of cracking may not be so apparent. After the repairs are completed, MT is often used to ensure the quality of the repaired weld, particularly when the weld involved is a partial-joint-penetration (PJP) groove weld or fillet weld.

MT is highly sensitive, and powder routinely collects along defect-free weld toes, for example, resulting in non-relevant indications. Yet, it is at the weld toes where lamellar tearing or heat affected zone cracking may occur. When disputes over the significance of an indication arise, the part can be easily reinspected; the existing powder is removed and the process repeated. Areas of dispute can be carefully ground to a smooth radius to see if the indication disappears when reinspected. When MT results are to be documented, the inspected area can be photographed. Alternately, it is possible to apply an adhesive tape to the inspected area, collecting the magnetic particles on the tape.

A distinct advantage of MT over PT is the speed with which MT can be performed. Further, MT can be performed while the part is warm. This is particularly helpful when MT is used to determine the extent of cracking. The crack can be removed by grinding or air carbon arc gouging and immediately inspected with MT to see if the full crack has been removed. For steel structures, MT is generally preferred over PT, because it is faster, cleaner, can be performed on hot weldments, and can detect some subsurface discontinuities.

10.6 RADIOGRAPHIC TESTING

Radiographic testing (RT) is an NDT method that uses penetrating radiation that passes through the item being inspected. The radiation exposes a recording medium on the opposite

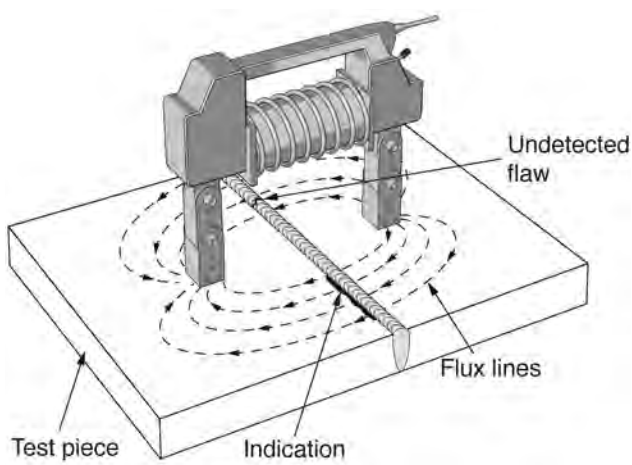

Fig. 10-3. Flux lines induced by the yoke.

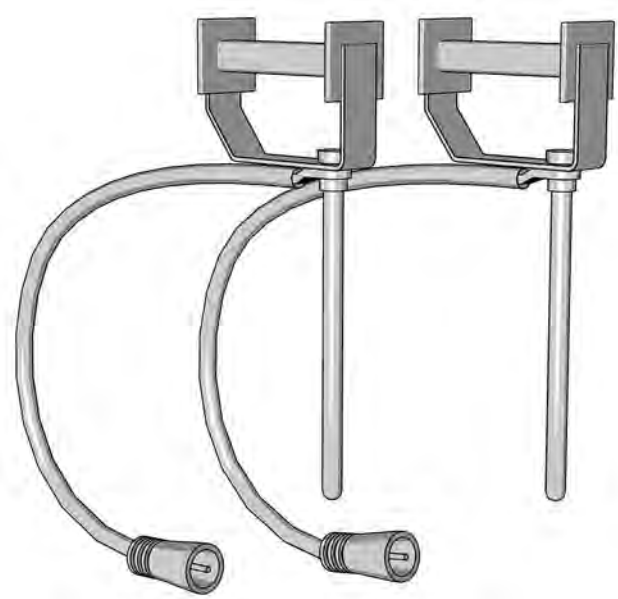

Fig. 10-4. Magnetic particle testing using prods.

side of the joint as shown in Figure 10-6. The recording medium can be industrial X-ray film or a digital radiation detector. Different materials and different thickness of the same material absorb the radiation at different rates, and the recording medium will be differentially exposed. When less radiation is transmitted through the object being inspected, the recording medium experiences less exposure. Practices for RT are covered in ASTM E94 *Standard Guide for Radiographic Examination* (ASTM, 2016) as well as AWS D1.1, clause 6.12. In the AISC *Specification*, RT is not prescribed for any application, with one exception—for cyclically loaded connections, AISC *Specification* Appendix 3 requires RT or UT (discussed in Section 10.7 of this Guide) for certain transverse CJP groove welds.

Radiation sources include X-ray machines and radioactive isotopes. X-rays are generated by electrical machines. With the proper source of X-rays, virtually any thickness of steel that would be used for steel construction can be inspected. However, the machines needed to inspect thick steel can become large with limited portability. Gamma rays are emitted by radioisotopes, typically cobalt-60 and iridium-192. Cobalt-60 can be used to inspect steel up to approximately 8 in. (200 mm) thick, while iridium-192 is limited to thickness of about 3 in. (75 mm). Radioactive isotopes pose additional safety concerns and require specialized training and licensing before use.

When the film is developed, the resulting radiograph will bear the image of the plan view of the part, including its internal structure. A radiograph is actually a film negative in which the darkest regions are those that were most exposed because the material being inspected absorbed the least amount of radiation. Thin parts will be darkest on the radiograph. Porosity will be revealed as small, dark and round circles. Slag is also generally dark and may look similar to porosity, but will be irregular in shape. Cracks that lie parallel to the source of radiation will appear as dark lines. Incomplete fusion and underfill will be depicted as darker areas. Weld reinforcement will result in a lighter region. Because the radiograph is a full-sized picture of the weld, the film can be placed next to the actual weld and the location of the discontinuity readily observed, even though the depth of the discontinuity cannot be determined by RT.

RT permits a volumetric examination of the part and is most effective for detecting volumetric discontinuities such as slag and porosity. When cracks are oriented perpendicular to the direction of the radiation source (e.g., parallel to the film), they will typically be missed with the RT method. Cracks that are parallel to the radiation path are the most detectable, although tight cracks have gone undetected by RT at times.

RT is not commonly used for the inspection of welds associated with building construction; it is more popular for bridge applications. RT is ideally suited for inspection of complete-joint-penetration (CJP) groove welds in butt joints such as splices of webs and flanges on plate girders. It is not suitable for inspection of PJP groove welds or fillet welds. When applied to T- and corner joints, the geometric constraints of the applications make RT inspection difficult, and interpretation of the results is highly debatable. The part must be such that a recording medium can be placed on the opposite side of the part as compared to the source of radiation.

Whenever radiography is used, precautions must be taken to protect workers from exposure to excessive radiation. Typically, this requires that people be evacuated from the area when RT is performed, resulting in the frequent pattern

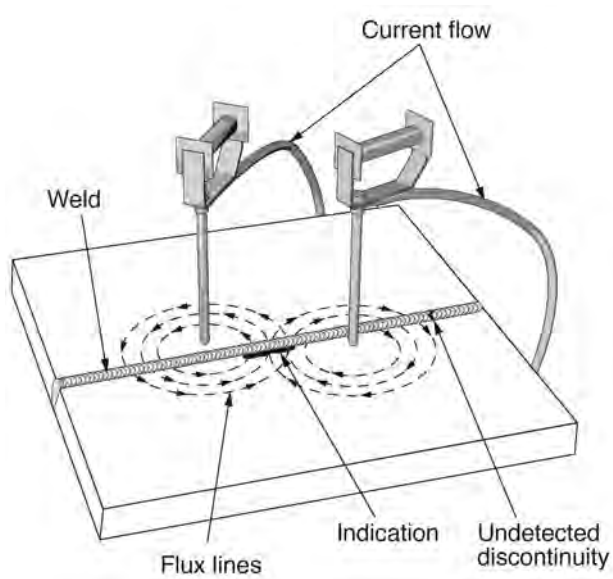

Fig. 10-5. Flux lines induced by the prods.

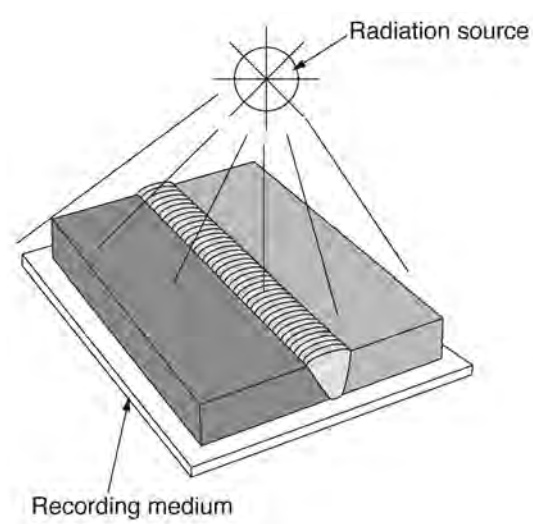

Fig. 10-6. Radiographic testing.

of fabricators performing RT during second- or third-shift operations. Safety measures dictated by the Occupational Safety and Health Administration (OSHA), the National Electrical Manufacturer's Association (NEMA), the Nuclear Regulatory Commission (NRC), the American Society of Nondestructive Testing (ASNT), and other agencies should be carefully followed when radiographic testing is conducted. The need to protect workers from radiation constitutes a major disadvantage of RT.

RT has the advantage of generating a permanent record for future reference. With a picture to review, many people are more confident that the interpretation of weld quality is meaningful. However, reading a radiograph and interpreting the results requires appropriate training, and thus the effectiveness of radiographic testing depends on the skill of the technician examining the film. While film has been the traditional means of detecting transmitted radiation, digital radiography is an attractive alternative. The results can be obtained faster than is the case when film must be processed, and a digital record can be retained instead of the actual film, eliminating the need for physical archival storage space.

For steel structures, UT (see Section 10.7 of this Guide) is generally preferred over RT, as UT permits the inspection of welds in more joint types, is more sensitive to planar discontinuities, and avoids the safety concerns associated with RT. The appeal of a permanent record and the intuitive nature of RT continue to make the process popular, particularly for bridge applications.

10.7 ULTRASONIC TESTING

Ultrasonic testing (UT) is a form of NDT that relies on the transmission of high frequency sound waves through materials as shown in Figure 10-7. Solid, discontinuity-free materials will transmit the sound throughout a part uninterrupted, but when the sound hits a material with a different acoustic impedance, some of the sound will be reflected back to a receiver. The receiver hears the sound reflected off of the back surface of the part being inspected. If a discontinuity is contained between the transmitter and the backside of the part, an intermediate signal will be sent to the receiver, indicating the presence of this discontinuity. The pulses are read on a display screen. Ultrasonic techniques are described in AWS D1.1, clause 6.13. The AISC *Specification* requires UT of certain welds, as discussed in Section 10.9.3 of this Guide.

The magnitude of the signal received from the discontinuity is proportional to the amount of reflected sound, which is related to the size, type and orientation of the reflecting surface. The relationship of the signal with respect to the back wall will indicate its location. UT is sufficiently sensitive to detect small discontinuities that are not relevant to the performance of the weld.

UT is most sensitive to planar discontinuities, such as cracks, laminations, and planes of incomplete fusion that lie perpendicular to the sound path. Under some conditions, uniformly cylindrical or spherical discontinuities can be overlooked with UT.

UT is ideal for inspecting CJP groove welds in butt, corner and T-joints. While UT inspection of PJP groove welds is possible, interpretation of the results can be difficult; there will always be a reflection from the unfused root that is not relevant, and separating the irrelevant root indications from legitimate concerns of incomplete root penetration is challenging. Except with specialized techniques, UT is not suitable for inspecting fillet welds.

A common problem in UT involves inspection of single-sided CJP groove welds made in T- and corner joints, with left-in-place backing. It is difficult to clearly distinguish between the naturally occurring regions where the backing contacts the adjacent vertical T- or corner joint member and an unacceptable incomplete fusion because a signal is always generated from this area. This is the situation encountered when steel backing is left in place on a beam-to-column moment connection. To mitigate this problem, the steel backing can be removed, offering two advantages: First, the influence of the backing is eliminated; second, in the process of backing removal, the joint can be backgouged and the root visually inspected prior to the application of the back weld and the reinforcing fillet weld. Backing removal is expensive, but it may be a practical alternative to rejecting an otherwise acceptable weld that has a questionable root indication.

When a bottom beam flange-to-column connection is inspected, it is impossible for the operator to scan across the entire width of the beam flange because of the presence of the beam web. This leaves a region in the center of the width of the weld that cannot be inspected by UT. Unfortunately, this is also the region where it is most difficult for the welder to deposit sound weld metal, and it has been identified as the location of many weld defects. When the beam is joined to a wide-flange column, this is also the most severely loaded portion of the weld. For some prequalified seismic moment connections, backing removal and subsequent backgouging

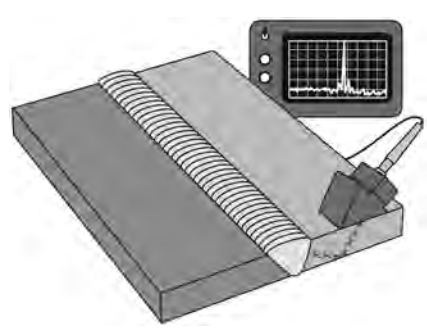

Fig. 10-7. Ultrasonic testing.

operations are required to overcome this UT limitation. However, this approach is expensive and is only required for certain beam-to-column connections in seismic construction (see Chapter 11 of this Guide).

10.8 PHASED ARRAY ULTRASONIC TESTING

Phased array ultrasonic testing (PAUT) is a newer variation of UT that uses a probe with multiple elements that can be individually activated. The individual elements can be independently turned on and off, and the intersection of the resulting sound patterns will interact with each other. When the sound waves are in phase, the effects will be additive and the sound will be amplified. When the sound waves are out of phase, the sound will be canceled. Phased array probes typically have 16, 32, 64 or more elements; these elements are electronically fired in a defined sequence to form, steer and focus the sound beams. A single fixed location probe can steer sound through the part at different angles, 45° to 70°, enabling a more accurate detection of discontinuities than is permitted by conventional UT. Conventional UT uses a single active element that sends and receives the sound or two paired elements where one does the sending and the other does the receiving. The ultrasonic imaging associated with medical sonograms uses similar technology.

When applied to weld inspection, PAUT more accurately detects and characterizes discontinuities in the welded connection and potentially eliminates some of the operator error that is associated with conventional UT. However, the equipment is more expensive and operators must be trained to use the more sophisticated systems.

Along with the advantage of the increased sensitivity of PAUT comes a significant potential disadvantage: PAUT may detect discontinuities that would be missed by conventional UT. On one hand, this may seem like a benefit. On the other hand, if the welded connection was acceptable when inspected with conventional UT and if similar welded connections have performed acceptably in the past, the extra sensitivity of PAUT can become a disadvantage. The sensitivity of the inspection method and the acceptance criteria need to correlate, and further, acceptance criteria need to be appropriate for the service conditions and demands.

In the 2015 edition of the AASHTO/AWS D1.5 *Bridge Welding Code* (AWS, 2015a), PAUT was incorporated into Annex K as an alternative to conventional UT. One of the major tasks was to calibrate the results of what would normally be acceptable and unacceptable when inspected with PAUT to what is the case for conventional UT. In some ways, this effort was similar to what the D1 committee did when UT was introduced into AWS D1.1 many years ago: The then new technology of conventional UT needed to be calibrated with the RT that had been in effect for years. Theoretically, the proper use of PAUT in accordance with Annex K will generate similar results as will properly applied conventional UT. Because of the technology differences, there will be some welds that might be deemed acceptable with conventional UT but will be unacceptable with PAUT—the goal was to obtain generally similar results.

The incorporation of PAUT into AASHTO/AWS D1.5:2015 was driven in part by the hope that the extra sensitivity of PAUT and the lessened dependence on operator skill might persuade some bridge owners to permit the substitution of PAUT for RT, which is mandated for particular welds. For building applications governed by AWS D1.1, UT is much more commonly used than RT, and no welds are specifically required to be RT inspected (in lieu of, or in addition to, UT). Without the incentive that existed for the bridge industry and combined with the concerns of the aforementioned calibration, neither AWS D1.1:2015 nor the AISC *Specification* included PAUT provisions.

As of 2016, PAUT is widely perceived as being more sensitive and more accurate than conventional UT, and this view is certainly held by the advocates for PAUT. Yet, anecdotal evidence suggests there are situations wherein welds were deemed acceptable by PAUT and rejected by conventional UT. The likely explanation for such observations is probably rooted in lack of training on the part of the PAUT technician. It is likely that as more experience is gained with PAUT, more reliable and consistent results will be obtained.

10.9 AISC *SPECIFICATION* CHAPTER N

AISC *Specification* Chapter N addresses the two subjects of quality control (QC) and quality assurance (QA). This chapter was first added to the AISC *Specification* in the 2010 edition (AISC, 2010b). While previous editions had various quality standards throughout, the AISC *Specification* consolidates the various requirements into one chapter. A variety of QC and QA criteria are addressed in Chapter N; this Guide will address only welding-related issues.

AISC *Specification* Chapter N prescribes minimum levels of NDT for specific welds in specific conditions. A User Note in the chapter identifies the QA/QC requirements as "…adequate and effective for most steel structures and are strongly encouraged for adoption without modification." The adoption and implementation of consistent standards typically leads to both quality and cost effective construction as contractors and inspectors work to familiar and consistent criteria.

This Guide does not summarize or repeat the requirements outlined in Chapter N; however, it will provide insight into how the requirements are to be applied to welded steel construction.

10.9.1 Quality Control and Quality Assurance

QC as specified in AISC *Specification* Chapter N is provided by the contractor, whether a fabricator or erector. QA as specified in Chapter N is provided by others when required by the authority having jurisdiction (AHJ), the applicable

building code (ABC), the purchaser, the owner, or the engineer of record (EOR). As to the NDT specified in Chapter N, this is normally performed by the agency or firm responsible for QA, with an exception as discussed in Section 10.9.6 of this Guide.

In AWS D1.1, the term *verification inspector* is used to identify the QA inspector, whereas the term *contractor's inspector* is used to identify the QC inspector.

10.9.2 AISC *Specification* Chapter N and AWS D1.1

AISC *Specification* Chapter N lists many welding-related inspections, conveniently summarized into three tables that contain the tasks that should be performed before, during and after welding. The number of identified tasks may initially appear to be a significant expansion over what is required by AWS D1.1, but this is not the case. Rather, Chapter N has simply summarized the various welding-related inspection tasks as primarily contained in AWS D1.1, clauses 5 and 6. Tables C-N5.4.1, C-N5.4.2 and C-N5.4.3 list the specific D1.1 clause for each of the tasks identified in the three tables in Chapter N.

10.9.3 AISC *Specification* Chapter N and NDT

When Chapter N was incorporated into the AISC *Specification* for the first time in 2010, NDT was made mandatory for certain types of welds in specific situations. Previously, the engineer was required to incorporate the requirements for NDT into contract documents. For example, in the 2005 AISC *Specification*, Section M5.3 required that "When nondestructive testing is required, the process, extent and standards of acceptance shall be clearly defined in the design documents" (AISC, 2005b). This approach toward NDT was consistent with the approach of AWS D1.1, clause 6.15. Before Chapter N, volumetric NDT was not required for any welds, with two notable exceptions—for cyclically loaded structures, Appendix 3 required transverse CJP groove welds, with and without reinforcement, to be inspected with RT or UT.

AISC *Specification* Section N5.5b requires UT of CJP groove welds subject to transversely applied tension loading in butt, T- and corner joints, in materials 5⁄16 in. (8 mm) thick or greater. The frequency of inspection depends on the ASCE risk category, as discussed in Section 10.9.4 of this Guide. The mandated NDT method is UT, which has the capability of providing a volumetric inspection. While RT can also provide volumetric inspection, UT is more suitable to field inspections, and T- and corner joints are difficult to inspect with RT. Other NDT methods such as PT and MT are incapable of providing volumetric inspection. The mandated NDT is for CJP groove welds. No mandatory NDT is specified for PJP or fillet welds, for a variety of reasons. CJP groove welds are expected to develop the full strength of the connected material and are therefore more critical. By definition, PJP groove welds (without reinforcing fillet welds) will not develop the full strength of the connected material. Proper connection design requires that PJP groove welds use a limited design strength when subject to tension, and therefore they are not subjected to the same high stresses and subsequent crack propagation risk as are typically associated with CJP groove welds. The mandated NDT is applicable only to connections loaded in tension and only when the tension is transverse to the weld joint; this restriction reflects risk. Welds subject to compression, shear and parallel loading are not covered by the mandated inspection. Finally, the mandated NDT is applicable to steel thicknesses of 5⁄16 in. (8 mm) or greater. UT inspection of thinner materials is difficult and standard procedures as contained in AWS D1.1, clause 6.19.1, are limited to this thickness range.

10.9.4 ASCE Classification

The mandated QA inspection for CJP groove welds as specified in AISC *Specification* Section N5.5b are contingent, in part, on the type of structure involved. Four risk categories are identified in ASCE/SEI 7, *Minimum Design Loads and Associated Criteria for Buildings and Other Structures* (ASCE, 2016).

10.9.5 Observe and Perform

AISC *Specification* Chapter N introduced the terms *observe* and *perform* in the context of various welding-related inspections. Observe tasks include inspections that are done on a random basis; such inspections are not required to be done in all cases, and work should not be delayed just because an observe inspection has not been accomplished. Perform tasks, however, must be accomplished for every welded joint or member, and further work cannot proceed until these tasks are accomplished.

The use of *observe* and *perform* are in contrast to common building code terminology, which customarily has used the often misunderstood terms of *periodic* and *continuous*. There are many tasks associated with welding, such as preparation of weld joints, tack welding, preheating, cleaning of the joint prior to welding, the actual act of welding, cleaning of weld passes, and so on. When periodic and continuous were applied to welding, it was not clear which activities fit into each category. Chapter N eliminated that confusion by designating observe and perform tasks to both QC and QA inspectors.

The number of before-welding inspection tasks identified as perform is limited and has a very practical justification: Proceeding without verification that these tasks have been performed can create problematic issues that are difficult to resolve after welding is accomplished. Included in this perform category are tasks such as verification that the welder

is qualified for the welding to be done and confirmation that WPS are available, as are the filler metal manufacturer's certificates of conformance. For T-, K- and Y- tubular connections (and only for those connections), there are perform inspections of the joint fit-up. Most of the perform activities are associated with inspections that are done after welding is complete, and unless there is a specified delay period, the inspections can be performed at any time. Most perform tasks should not interrupt fabrication or erection.

10.9.6 Alternatives to Chapter N Requirements

AISC *Specification* Section N1 User Note advises that "The QA/QC requirements in Chapter N are considered adequate and effective for most steel structures and are strongly encouraged without modification" (AISC, 2016d). The same User Note continues to say "There may be cases where supplemental inspections are advisable. Additionally, where the contractor's quality control program has demonstrated the capability to perform some tasks this plan has assigned to quality assurance, modification of the plan could be considered." Three alternatives to the standard inspections prescribed in Chapter N will be discussed: (1) situations where supplemental inspections may be advisable, (2) situations where inspection rates can be reduced, and (3) situations where the contractor performs some tasks normally supplied by QA.

Supplemental Inspections

Neither Chapter N nor the Commentary provides examples of where supplemental inspection may be advisable. The applicable building code (ABC) or authority having jurisdiction (AHJ) may impose requirements beyond those specified in Chapter N, and those requirements must be added by means of the construction specifications. The challenge for the engineer is to recognize where supplemental inspections are justified when not required by the ABC or AHJ. Perhaps the most probable situations in which additional inspection may be specified are for ASCE risk category I or II, where NDT is not required or is required at a level of 10%, respectively. There are, nevertheless, those few unique situations where additional inspection may be warranted, including:

- When new or unique materials are used, including in unusual thickness ranges
- When standard materials are used in new ways
- When new or specialized welding processes are used
- When redundancy decreases
- When loading is cyclic or impactive (i.e., when strain-rate is a factor)
- When unusually cold service temperatures will be experienced
- When the consequences of failure are unusually high

The preceding list is likely incomplete, and the engineer should determine which features are unique to the project that may justify additional inspections. It is wise to work in conjunction with an NDT expert to determine what additional testing will add value for the unique situation being encountered.

Reduced Inspections

AISC *Specification* Section N5.5e allows the UT inspection rate of 100% to be reduced if an individual welder or welding operator has a consistently high quality record. The reduction is contingent on the following:

- The project must involve over 40 welds.
- The EOR and AHJ must approve the reduction.
- 95% or more of the inspected welds must contain no unacceptable discontinuities.
- At least 40 welds must be sampled.
- The reduced rate is not less than 25%.

The reduced NDT rate does not apply to cyclically loaded structures, as stipulated in AISC *Specification* Section N5.5c.

Contractor Supplied NDT Normally Performed by QA

The User Note to AISC *Specification* Chapter N states that "…where the contractor's quality control program has demonstrated the capability to perform some tasks this plan has assigned to quality assurance, modification of the plan could be considered." Further details of such a plan modification are contained in Chapter N. In most cases, when this option is implemented, the NDT normally provided by QA is provided by QC. Chapter N does not define how the expense of NDT performed by QC is handled; these issues must be resolved contractually.

The practical advantage of permitting NDT to be performed by QC rests in scheduling. The concern of QA inspections on production schedule is addressed in AISC *Code of Standard Practice* Section 8.5.2 as follows: "Inspection of shop work by the (QA) inspector shall be performed in the fabricator's shop to the fullest extent possible. Such inspections shall be timely, in-sequence and performed in such a manner as will not disrupt fabrication operations and will permit the repair of nonconforming work prior to any required painting while the material is still in-process in the fabrication shop" (AISC, 2016a). It is also stated in Section 8.5.1 that "The fabricator and the erector shall provide the (QA) inspector with access to all places where the work is being performed. A minimum of 24 hours notification shall be given prior to the commencement of work." When QC assumes this responsibility, scheduling is easier and disruptions can be minimized.

Roof level reduced beam section connection, One World Trade Center, New York.

Chapter 11
Seismic Welding Issues

11.1 INTRODUCTION

11.1.1 Unique Loading—Inelastic

Most buildings are designed to resist what are commonly called statically applied loads or static loading. Implied in this term are the concepts of slow rates of loading (i.e., low strain rates) and infrequent application and reapplication of loads. To resist such loads, a building must be designed so that the resultant stresses are kept below acceptable limits.

Some structures must be designed for cyclic loading. Bridges are classic examples of cyclically loaded structures. The moving loads imposed on a bridge create live loads that place extra demands on structures. The application and reapplication of live loads results in cyclic loading. To endure such loading, cyclically loaded structures must be designed, fabricated and inspected more carefully than structures that experience only static loading. The structural details that are suitable in a statically loaded structure may lead to fatigue cracking in a cyclically loaded structure. To preclude fatigue cracking, the stress range must be held below prescribed limits. Fatigue is addressed in Chapter 12 of this Guide.

Buildings in seismic zones are subject to loading conditions that are different from those affecting either statically or cyclically loaded structures. In a major earthquake, select portions of the structural frame are expected to experience inelastic (or plastic) deformations, as shown in Figure 11-1. The structural frame is required to be ductile and the steel must yield but not fracture; this is the most important feature that distinguishes seismic construction from structures subject to either static or cyclic loads.

To obtain the desired ductile behavior, seismically resistant structural systems must be designed and detailed with this severe loading condition in mind. The welded connections must be designed and detailed with such loading in mind as well. This chapter will deal with welding-related issues for systems subject to low-cycle, inelastic loading.

11.1.2 Framing Concepts and Connections

The lateral loading imposed on structures during seismic events generally places the highest demands on the ends of beams and braces—at the point of the connections. Thus, connections are often in or near the most severely stressed portions of a structure. For a properly designed system, inelastic deformations are not typically expected to be concentrated in the welds themselves, but welds are often near the base metal in which such strains are located. In order for the expected inelastic deformations to occur, the welded connections must be strong enough to resist the applied stresses without fracture, and the base metal must be capable of deforming to accommodate the straining.

11.1.3 Requirements for Welds—Strength and No Fracture

The welded connections in systems specifically designed for seismic resistance (also called high-seismic systems or systems with $R > 3$) must be strong, ductile and fracture-resistant. Strength and ductility are primarily addressed through the selection of the welding filler metals and control of the procedures used to deposit the metal. Such criteria are not significantly different than the requirements for nonseismic applications. In systems specifically designed for seismic resistant applications, because of the potential consequences of connection fracture, as well as the demands placed on the connections, the welded connections are treated differently primarily in order to achieve superior fracture resistance.

11.1.4 Fracture of Welded Joints

Three factors determine the ability of a connection to resist brittle fracture: the applied or residual stresses, the presence (or lack) of cracks or crack-like discontinuities, and the fracture toughness of the material. Fracture is discussed in Chapter 13 of this Guide. The applied stresses in the welded joint are inherently linked to the configuration of the connection. In general terms, two approaches have been used in seismic design to reduce the stresses applied to the joint: the overall connection can be strengthened (such as by the use of heavy shear plates), or the demand on the joint can be reduced (such as through the use of reduced beam sections). Thus, the overall connection configuration has a direct effect on the stress level in the welded joint, and stress is the first of the three factors that determine the fracture sensitivity.

In addition to the overall stress in a welded joint, geometric features may locally amplify the effects of the stress. Stress concentrations occur in a variety of forms, including notches and gouges from flame cutting, weld toes, left-in-place weld tabs, and weld discontinuities such as undercut, underfill, slag intrusions and porosity. These stress concentrations are generally not planar, but volumetric and, as such, are typically less severe than cracks. The significance of the stress concentration depends on the geometry of the discontinuity, the local stress levels, and the orientation of the stress concentration to the stress field and other factors.

The second variable that determines the fracture resistance of a welded joint is the size, location and geometry of cracks and crack-like, planar discontinuities. The AISC *Seismic Provisions* (AISC, 2016c) call for specific post-welding NDT to detect any cracking that might have occurred during or after welding. Crack-like, planar discontinuities can be created by details such as left-in-place steel backing in transversely loaded groove welds in T-joints. Prohibitions on problematic geometric details have been included in the AISC *Seismic Provisions*.

The final factor in determining the fracture resistance of a welded joint is the fracture toughness of the materials involved in the joint. The materials of interest include the base metal, the HAZ and the weld metal. Tests performed on base metals suggest that commercially supplied rolled shapes routinely exhibit sufficient fracture toughness to avoid the specification of special requirements (Frank, 1997), except for heavier rolled shapes and thicker plates. Similarly, when welding heat input is constrained within normal fabrication limits, no special controls have been found necessary for HAZ fracture toughness control (Johnson, 1997). For weld metal, fracture toughness requirements in the form of minimum Charpy V-notch (CVN) toughness requirements have been developed (Barsom, 2003) and are discussed in Section 11.5.2 of this Guide.

11.1.5 Welded Connection Objectives

As stated previously, it is not intended for inelastic behavior to occur locally in the weld. Rather, the welds are designed to be as strong as or stronger than the fully plastic strength of the adjacent member so that inelastic deformations can occur without fracturing the welds. Accordingly, AWS D1.8, clause C1.1, defines the overall objective for welded connections is to have adequate strength, notch toughness and integrity to perform as intended during major seismic events (AWS, 2016).

11.2 THE NORTHRIDGE EARTHQUAKE

11.2.1 Background

Seismic design has always relied on analysis, laboratory experimentation, and actual post-earthquake field observations. The Northridge, California, earthquake of January 17, 1994, is reviewed in this chapter because the lessons learned from that event extended well beyond welding issues: "The M6.7 earthquake…was one of the most significant earthquakes of the past century with regard to the wealth of engineering data that was obtained and analyzed and subsequently implemented into the building codes" (Hamburger, 2009).

The Northridge earthquake caused unexpected damage to welded special moment-resisting connections in a variety of steel-framed buildings. While no steel building collapsed in the Northridge event, the results were alarming in that brittle fractures had occurred instead of the ductile behavior that was expected. Investigations into the causes of this damage resulted in a series of changes, affecting the way such structures were designed, detailed, fabricated, erected, welded

Fig. 11-1. The need for extensive plastic deformation makes seismic loading unique.

and inspected. The new requirements were subsequently incorporated into consensus standards issued by AISC and AWS.

The typical Northridge fractures were associated with the welded connection of the bottom beam flange of the beam-to-column connection in moment frames; a typical detail is shown in Figure 11-2. Many reasons have been postulated for the concentrated damage in the bottom beam-flange connection. First, the left-in-place steel backing for the bottom beam flange is on the outside of the beam flange, whereas on the top beam flange, it is on the inside of the flange. The stresses on the outside of the bottom beam are significantly higher than for the inside of the top flange (El-Tawil, 1998). Second, the bottom flange connection must be made by welding through a weld access hole, interrupting the weld at the midpoint of its length and forcing a weld stop and restart at that location, potentially introducing workmanship discontinuities into this area. Third, the top flange weld is likely protected by some composite action with the slab. Finally, post-welding UT of the flange weld is more reliable because it can be scanned without the interference offered by the web as is the case for the bottom flange weld. Of the inspected moment connections with damage, more than 90% of the observed fractures occurred at this location (AISC, 1994a).

11.2.2 FEMA 353 Conclusions

The Federal Emergency Management Administration (FEMA) funded investigations that examined the cause of the Northridge damage to moment connections. The investigations lead to this conclusion: "The typical moment-resisting connection detail employed in steel moment-frame construction prior to the 1994 Northridge earthquake…had a number of features that rendered it inherently susceptible to brittle fracture" (FEMA, 2000b). The report lists seven factors:

- "The most severe stresses in the connection assembly occur where the beam joins to the column."
- "…the weld…must be interrupted at the beam web, with either a start or stop of the weld at this location. This welding technique often results in poor quality welding at this critical location…"
- "The basic configuration of the connection makes it difficult to detect hidden defects at the root of the welded beam-flange-to-column-flange joints."
- "…the beam flanges at the connection carry a significant amount of the beam shear. This results in significant flexural stresses on the beam flange at the face of the column…"
- "… severe strain concentrations can occur in the beam flange at the toe of these weld access holes. These strain concentrations can result in low-cycle fatigue and the initiation of ductile tearing of the beam flanges…"
- "Steel material at the center of the beam-flange-to-column-flange joint is restrained from movement, particularly in connections of heavy sections with thick column flanges. This condition of restraint inhibits the development of yielding at this location, resulting in locally high stresses on the welded joint, which exacerbates the tendency to initiate fractures at defects in the welded joints."
- "In connections with excessively weak panel zones, inelastic behavior of the assembly is dominated by shear deformation of the panel zone. This panel zone shear deformation results in a local kinking of the

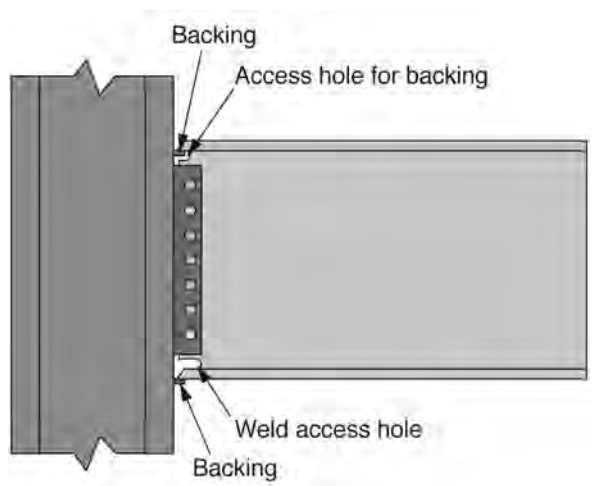

Fig. 11-2. Pre-Northridge connection.

column flanges adjacent to the beam-flange-to-column-flange joint….”

After these seven factors were identified, three additional factors that “contributed significantly to the vulnerability of connections” were listed, as follows:

- “The welding consumables that building erectors most commonly used inherently produced welds with very low toughness.”
- “… as member sizes increased, strain demands on the welded connections also increased, making the connections more susceptible to brittle behavior.”
- “… many beams actually had yield strengths that approximated or exceeded that required for grade 50 material. As a result of this increase in base metal yield strength, the weld metal in the beam-flange-to-column-flange joints became under-matched…”

Oddly missing from the list was the influence of the left-in-place steel backing that served as the crack initiation site for many of the fractures.

In addition to referencing some of the items in FEMA 353 (FEMA, 2000d), two additional factors have been cited by some authors:

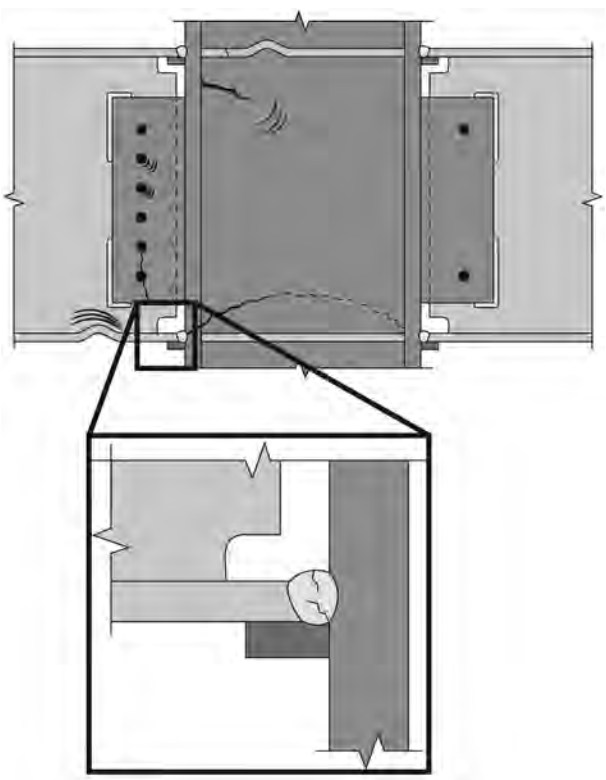

Fig. 11-3. W1 indications, weld root indications (image adapted from SAC, 1995).

- “…poor adherence to the requirements of the AWS welding code when making welded joints.”
- “…the connection practices commonly in use prior to the earthquake had been validated years earlier by testing of specimens that were much lighter than those present in the damaged buildings” (Hamburger, 2009).

The multiple contributing factors explain why many corrective actions were eventually incorporated into applicable construction standards as a result of the Northridge event.

11.2.3 Role of W1 Indications

The earliest post-earthquake inspections quickly showed that widespread anomalies in the weld root were being observed in fractured connections, as well as in connections that were still intact but had been ultrasonically inspected and were assumed to be partially cracked. The designation W1 was used to identify these weld root anomalies, and the initial description of a W1 was an incipient weld crack, although this description was eventually changed in FEMA 267 (FEMA, 1995) to weld root indication as shown in Figure 11-3. This was a significant change, reflecting the reality that UT could not identify cracks but only indications. An indication could be due to a crack (in the weld, fusion zone or HAZ), but could also be the result of incomplete fusion or lamellar tearing. Further, UT inspection was incapable of determining when such weld discontinuities were created, whether before or during the earthquake.

These commonly occurring nonconforming conditions were not well understood in the early post-Northridge days and prompted many well-intended, albeit misdirected attempts to mitigate the formation of W1 indications in new construction. Based on the assumption that the W1 indications were cracks that occurred during the original construction, there was a call for higher preheat levels, lower hydrogen contents for the weld metal, post-weld heat treatment, and peening; proposals intended to reduce cold cracking tendencies (see Section 6.3.2 of this Guide). When W1 indications were assumed to be earthquake damage, inclusion of these connections in to the damage totals significantly increased the extent of the damage.

The FEMA investigation determined that W1 indications were not the result of earthquake damage, but were rather preexisting discontinuities that were there from the time of construction (Paret, 1999). Further, the indications were determined to be due to slag intrusions and incomplete fusion, not cracking. Three conclusions were reached, as follows:

- W1s are a result of poor welding and inspection practices during construction, not a result of earthquake ground motions.
- Ultrasonic testing, as normally employed by testing

laboratory personnel, is not a reliable inspection technique for identifying defects in the roots of welded full penetration T-joints with backing.

- The extent of earthquake damage to welded steel moment frame buildings is substantially less than has previously been reported (Paret, 1999).

The final comment is worthy of emphasis: Connections with W1 indications were initially classified as earthquake damage; when they were properly reclassified as workmanship and inspection-related issues, the number of damaged buildings was reduced by approximately 50% (Miller, 2014). Interestingly, many of the connections with W1 indications (i.e., those with preexisting root discontinuities) did not fracture in the earthquake. Still, the widespread reports of W1 indications brought renewed focus on the issues of workmanship, compliance with welding procedure specification values, and the difficulty of ultrasonically testing complete-joint-penetration (CJP) groove welds in T-joints when steel backing is left in place.

11.3 SEISMIC WELDING SPECIFICATIONS

11.3.1 FEMA Guidelines

As a result of the FEMA-sponsored investigations, a variety of nonconsensus guideline documents were created, providing recommendations for incorporation into contract specifications. While many were produced, three of the most popular were FEMA 267 *Interim Guidelines: Evaluation, Repair, Modification, and Design of Welded Steel Moment Frame Structures* (FEMA, 1995); FEMA 350 *Recommended Seismic Design Criteria for New Steel Moment-Frame Buildings* (FEMA, 2000a); and FEMA 353 *Recommended Specifications and Quality Assurance Guidelines for Steel Moment Frame Construction for Seismic Applications* (FEMA, 2000d). The content of these documents was incorporated into contract specifications in the years that followed the Northridge earthquake, before the content could be adopted by consensus specifications, such as the AISC *Seismic Provisions* (AISC, 2016c). For new construction, there is currently no need to reference documents such as FEMA 267, FEMA 350 and FEMA 353 because they are outdated, and the AISC *Seismic Provisions* and AISC *Prequalified Connections* (AISC, 2016b) address the same topics that were part of the guideline documents.

Two other FEMA publications are noteworthy because the content of these documents has not been incorporated into AISC documents, and yet may be useful in the future. FEMA 351 *Recommended Seismic Evaluation and Upgrade Criteria for Existing Welded Steel Moment-Frame Buildings* (FEMA, 2000b) deals primarily with the pre-Northridge moment connection and provides approaches for retrofitting existing systems; information that is still applicable and useful. FEMA 352 *Recommended Postearthquake Evaluation and Repair Criteria for Welded Steel Moment-Frame Buildings* (FEMA, 2000c) addresses the issues engineers must consider after an earthquake occurs; this information is still valid and will probably be helpful after future earthquakes.

11.3.2 AISC *Seismic Provisions*

The AISC *Seismic Provisions* govern "the design, fabrication and erection of structural steel members and connections in the seismic force-resisting systems (SFRS), and splices and bases of columns in gravity framing systems of buildings and other structures with moment frames, braced frames and shear walls." As stated in the scope, the AISC *Seismic Provisions* deal with members and connections, including welded connections. As such, the AISC *Seismic Provisions* contain welding-related requirements, both in terms of connection details and how the welds are to be performed. The welding-related issues are expanded upon in Section 11.6 of this Guide.

AISC *Seismic Provisions* Chapter K requires connections in the seismic force-resisting moment frames to either be qualified by cyclic testing or to be prequalified by the Connection Prequalification Review Panel (CPRP).

11.3.3 AISC *Prequalified Connections*

AISC *Prequalified Connections* specifies "…design, detailing, fabrication and quality criteria for connections that are prequalified in accordance with the AISC *Seismic Provisions*…for use with special moment frames (SMF) and intermediate moment frames (IMF)." Members of the committee that produce the AISC *Prequalified Connections* standard constitute the Connection Prequalification Review Panel (CPRP) discussed in AISC *Seismic Provisions* Chapter K. The prequalified moment connection details listed in the AISC *Prequalified Connections* may be used, within the prescribed limits, without performing the cyclic qualification tests that are otherwise required by the AISC *Seismic Provisions*.

The AISC *Prequalified Connections* standard contains many welding-related details, similar to those in the AISC *Seismic Provisions*, such as backing removal and tab removal, treatment of left-in-place backing, and weld access hole configurations, but provided in the context of specific prequalified connection details. The welding-related issues are expanded upon in Section 11.7 of this Guide.

The use of the adjective *prequalified* in conjunction with moment connections is logical and justified; unfortunately, the same term is used in conjunction with welding procedure specifications (i.e., prequalified WPS) and has created some confusion. Also, because the alternative to prequalified moment connections are connections that have been qualification tested, similar confusion exists when discussing

qualified WPS. In spite of some confusion, the common use of the terms is somewhat helpful because the same philosophy applies in both situations; prequalified connections must comply with all the requirements as stated in the AISC *Prequalified Connections*; prequalified WPS must comply with all the requirements as stated in AWS D1.1, clause 3. Also, when a connection detail deviates from one or more of the prequalified requirements, qualification by testing in accordance with the AISC *Seismic Provisions* is possible, just as WPS that deviate from the prequalified requirements can be qualified by testing in accordance with AWS D1.1, clause 4.

11.3.4 AWS D1.8

AWS D1.8, *Structural Welding Code—Seismic Supplement* (AWS, 2016), deals with the major topics of welded connection details in clause 4, welder qualification in clause 5, fabrication in clause 6, and inspection in clause 7. Clause 6 is subdivided into parts as follows: Part A—Filler Metal Requirements; Part B—Demand Critical Filler Metal Requirements; Part C—Welding Procedures; Part D—Fabrication of Various Welded Details; and Part E—Protected Zone. AWS D1.8 does not specify when or from where weld backing is required to be removed, but clause 6, Part D, addresses how backing removal is to be performed. An extensive commentary is part of AWS D1.8, explaining the rationale behind the provisions. D1.8 requirements are summarized in Section 11.5 of this Guide.

11.4 SEISMIC TERMINOLOGY

11.4.1 Demand Critical Welds

A demand critical weld is formally defined in the AISC *Seismic Provisions* as a "weld so designated by these *Provisions*." This simple definition, while accurate, is not particularly helpful in that it does not identify why a weld might be so designated in the AISC *Seismic Provisions*. The concept of demand critical incorporates two ideas: The welded connection is subject to severe loading conditions (i.e., high demand), and the joint is essential to the performance of the structure (i.e., critical). The failure of these connections would be expected to result in significant degradation in the strength and stiffness of the seismic system according to AISC *Seismic Provisions* Commentary Section A3.4. When both criteria are met, the welds in the connection are designated as demand critical and are subject to additional requirements involving detailing, material selection, workmanship, fabrication standards and inspection.

The AISC *Seismic Provisions* and AISC *Prequalified Connections* identify certain welds as demand critical. Structural design drawings and specifications for steel construction are required by AISC *Seismic Provisions* Section A4.2(c) to identify the welds that are demand critical. An all too common practice is for drawings to note that all welds are demand critical even when neither the AISC *Seismic Provisions* nor the AISC *Prequalified Connections* have classified the welds as such. Superficially, making all welds demand critical may seem like a conservative path for the engineer to pursue. However, such requirements are sometimes expensive or even impossible to achieve. For example, diaphragm plates within box columns are often welded with electroslag welding (ESW) because there is no other viable way to make these blind welds. Yet, if these welds are called demand critical, it may be impossible to meet the corresponding requirements AWS D1.8 imposes on such welds. The philosophy as incorporated into the AISC seismic-related standards is that the extra measures to be imposed on demand-critical welds are justified only where the twin criteria of significant demand and critical consequence of failure concurrently exist in a single connection.

11.4.2 Protected Zone

The protected zone is defined in the AISC *Seismic Provisions* Glossary as the "area of members or connections of members in which limitations apply to fabrication and attachments." The protected zone is the portion of a building frame in which inelastic (or plastic) deformation is expected to occur; an example of a plastically deformed connection is shown in Figure 11-4. In order for the plastic deformation to occur, and perhaps more importantly, in order to avoid fracture in this region, it is important that the region is free of notches, stress concentrations, and miscellaneous attachments. Prohibitions are imposed on the types of attachments that can be made in the protected zone and repairs made in this region are subject to extra precautions.

The actual location and dimensions of the protected zone are dependent on the connection detail and system type. In a moment frame, the protected zone will be in the beam, near the column. For an eccentrically braced frame, the protected zone will include the link. The location and size of the protected zone is required to be identified in the construction documents. AISC *Prequalified Connections* defines the location and size of the protected zones for various prequalified details.

11.4.3 Lowest Anticipated Service Temperature

The lowest anticipated service temperature (LAST) is significant in that the fracture toughness of steel decreases in a nonlinear manner with a decrease in temperature—below the transition temperature, the fracture toughness of the steel may dramatically decrease. AISC *Seismic Provisions* Section A4.2 requires the engineer to identify the LAST "if the structure is not enclosed and maintained at a temperature of 50°F (10°C) or higher." When LAST is low, different steels

and filler metals may be required in order to meet the fracture toughness requirements as compared to when the steel in the structure is at room temperature.

The inside temperature of most buildings is maintained at a comfortable level for the occupants, 68°F (20°C). The steel columns and beams inside the building are also typically at this temperature, and both steel and weld metal routinely exhibit good fracture toughness at this temperature level. The external ambient temperature may be much colder, but the heated building will result in the steel being relatively warm.

Routine deviations from the general experience of the steel members being relatively warm when in service exist. Perimeter columns and beams of buildings may be exposed to the atmosphere. Convention centers and other large span structures may have external trusses from which the roof hangs, exposing the trusses to the elements. Warehouses, airplane hangars and industrial buildings may not be heated or may be maintained at lower temperatures than office buildings. Special-purpose buildings such as food lockers may contain steel that is continuously exposed to low temperatures. Finally, there are many nonbuilding structures that are never heated such as sign structures, antennas, and elevated outdoor walkways. For such structures, the effects of lower temperatures on steel properties must be considered.

While it is up to the engineer to specify LAST, it is typical to consider the temperature of the steel in the completed structure when in service. During construction, the steel in the exposed frame may experience temperatures lower than will be the case when the building is occupied, but the potential decreased fracture resistance of the steel during the construction period is normally ignored.

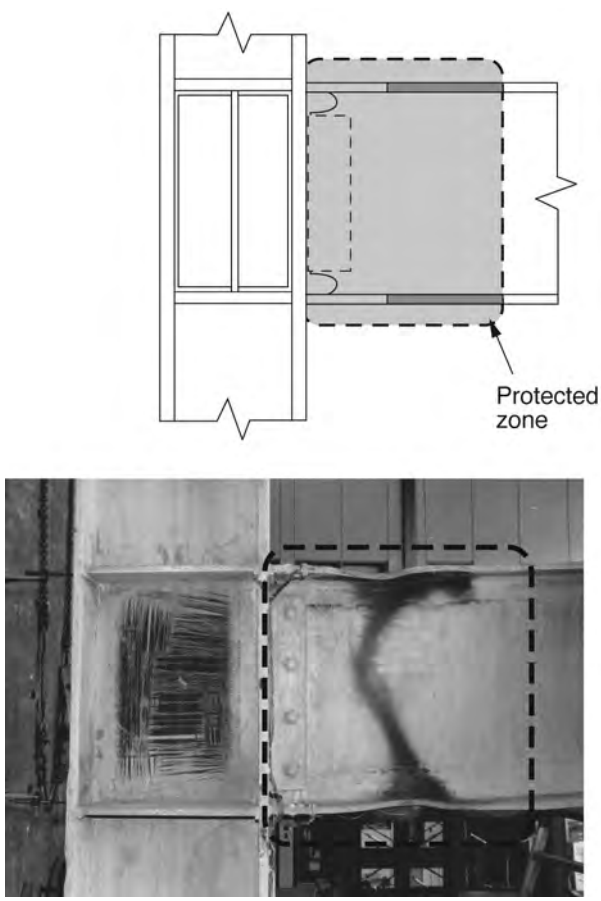

Fig. 11-4. The protected zone includes regions where inelastic (plastic) straining is expected to occur.

11.5 AWS D1.8

11.5.1 Introduction

The requirements of AWS D1.8 "…complement the AISC *Seismic Provisions* and are intended to ensure that welded joints that are designed to undergo significant repetitive inelastic strains as a result of earthquakes or that are used to connect members designed to resist such inelastic strains have adequate strength, notch toughness and integrity to perform as intended" (AWS, 2016). Three characteristics of the welded connections are emphasized: strength, notch toughness and integrity. AWS D1.8 imposes requirements that are necessary beyond those contained in AWS D1.1 to ensure these characteristics are achieved for seismically loaded structures.

11.5.2 Filler Metal Requirements

To ensure that the deposited weld metal has adequate fracture resistance, AWS D1.8, clause 6.3.1, imposes a variety of requirements on the filler metals that can be used. All filler metals used to make welds on the SFRS must be capable of meeting prescribed CVN criteria when the weld metal is tested in accordance with the applicable filler metal specification. Additionally, AWS D1.8, clause 6.2, requires heat input envelope testing (as discussed in the following paragraphs) for filler metals used to make demand critical welds. The mandated tensile tests must demonstrate that the weld metal as deposited under extreme conditions of high and low heat input still delivers the requisite yield, tensile and elongation requirements. CVN testing of deposited weld metal under the extreme conditions of heat input demonstrates the fracture toughness of the weld metal.

Heat input is a mathematical estimate of the thermal energy introduced by the welding arc into the steel, as well as the energy required to make the weld (see Section 8.8.9 of this Guide). Optimized weld metal for many carbon-manganese-silicon weld deposits (typically used for structural steel applications) is generally achieved when heat input is in the range of 40 to 60 kJ/in. (1.6 to 2.4 kJ/mm). Filler metals used to make demand critical welds are required to be tested at both high and low heat input levels, in conformance with

tests described in Annex A of AWS D1.8. While the actual heat input levels to be tested are not prescribed, D1.8 suggests the low heat input test be conducted at 30 kJ/in. (1.2 kJ/mm) and the high heat input test at 80 kJ/in. (3.1 kJ/mm). When the deposited weld is able to achieve all the required mechanical properties at the low and high heat input levels, then the contractor can use the data to develop welding procedures that are within the heat input limits.

Some filler metals, because of their characteristically robust mechanical properties or narrow operational ranges, are exempt from the testing required by Annex A according to AWS D1.8, clause 6.3.1.3. The exemptions include certain shielded metal arc welding (SMAW) electrodes and solid electrodes used for gas metal arc welding (GMAW). GMAW composite (i.e., metal-cored) electrodes require Annex A testing.

The filler metal specification that governs flux-cored arc welding (FCAW) carbon steel electrodes, AWS A5.20 (AWS, 2005b), has incorporated an optional suffix "-D" which mandates high and low heat input testing. While the testing conditions are slightly different from those prescribed in AWS D1.8, Annex A, D1.8 permits the use of certain electrodes classified with the "-D" designator in lieu of Annex A testing.

For demand critical welds made on Grade 50 steel, the deposited weld metal is required to demonstrate a minimum CVN value of 40 ft-lb at +70°F (54 J at +21°C) in special tests conducted at high and low heat input levels, and additionally, show 20 ft-lb at 0°F or −20°F (27 J at −18°C or −29°C), when tested in accordance with the applicable filler metal specification. These criteria were developed based upon loading conditions, connection details, workmanship standards and inspection requirements (Barsom, 2003). The lower temperature acceptance criterion is based upon the AWS A5 filler metal classification tests.

These criteria are applicable to structures with enclosed structural elements assumed to be maintained at a temperature above +50°F (+10°C). For situations where this is not the case, alternate criteria must be employed, requiring testing welds at lower temperatures (see Section 11.4.3 of this Guide). AWS D1.8 addresses the method by which filler metals are tested to demonstrate the ability of welds to perform acceptably at low temperatures. AWS D1.8, clause 6.2.2, requires that when 70-ksi (485 MPa) or 80-ksi (550 MPa) filler metals are to be used, they must be tested at a temperature that is 20°F (10°C) above the LAST temperature. Testing at higher than LAST is justified based on the concept of temperature shift (Barsom and Rolfe, 1999). For 90-ksi (620 MPa) filler metals, testing is done at LAST.

The required weld metal fracture toughness was based upon connection details that were free of large crack-like discontinuities (such as those created by left-in-place steel backing) and free of fabrication-induced cracks and workmanship defects. High toughness values alone will not ensure adequate structural performance when stresses are too high, when members are highly constrained, or when severe geometric stress raisers exist (Barsom, 2003). The previously discussed CVN toughness criteria, and as contained in the AISC and AWS standards, presume that other portions of these standards are being applied to the design, detailing, fabrication and inspection of connections.

11.5.3 Welder Qualification Requirements

AWS D1.1, clause C-4.2.2, stipulates that welder qualification consists of specific tests designed to examine an individual's ability to deposit quality welds under test conditions when following a proper WPS. Welder qualifications tests are not intended to replicate all the conditions under which welds will be made in production, nor are qualification tests expected to replace the need for specific training of welders to handle new or unique conditions. However, the widespread observations of the aforementioned W1 indications, concentrated under the web on the bottom beam flange-to-column flange connection suggested that welders needed to be qualified on a test configuration that was similar to what is encountered in the field. AWS D1.8, Annex D, describes the test that was developed to address this need. Formally called the Supplemental Welder Qualification for Restricted Access Welding testing, it is commonly called the rat hole test. The Annex D test supplements, but does not replace, welding qualification testing in accordance with AWS D1.1 requirements.

AWS D1.8 mandates that welders pass the Supplemental Welder Qualification for Restricted Access Welding test when the production weld to be made meets all of these requirements:

- The weld is demand critical.
- The weld joins the bottom beam flange to the column flange.
- The weld must be made through a weld access hole.

If any one of these conditions does not exist, the welder qualification test as described in Annex D is not required. For example, even though column-to-base plate welds may require welding through an access hole, such welds do not meet the requirements of the second item previously listed.

The Annex D test is required to be conducted with a welding deposition rate that is equal to or exceeds that which will be used in production. This test feature is used to ensure the welder is capable of not only welding with restricted access, but with high productivity welding procedures that also demand extra skill.

11.5.4 WPS Requirements

It is possible to purchase electrodes that when tested in accordance with the applicable AWS A5 filler metal classification tests, are capable of depositing weld metal with defined CVN toughness values, yet in production use a combination of welding variables that create welds with notch toughness values that are significantly lower than that obtained in the classification test. More simply stated: With incorrect welding procedures, it is possible to make bad welds with good electrodes. As was previously discussed, filler metals to be used for demand critical welds are generally required to be tested at high and low heat input limits. WPS then are created so that the welding parameters used for production welding do not result in heat input levels outside the tested limits.

Heat input is directly related to the size of the weld bead deposited; higher heat input levels result in larger beads. For FCAW, once the wire feed speed is set (which is directly related to welding current) and the voltage is selected, the travel speed will be the primary means by which heat input is controlled. For semiautomatic work, the welder is responsible for regulating the travel speed. A welder cannot be expected to adhere to a travel speed of 10 versus 12 in. per minute (250 versus 300 mm per minute). However, to control heat input, the welder must control the size of the deposited bead, making sure it is neither too large (indicative of a low travel speed and a correspondingly high heat input) nor too small (indicating the opposite concern).

In addition to limiting the heat input that is used in production welding, AWS D1.8 imposes the maximum interpass temperature that can be used in production. In a multipass weld, the interpass temperature is "the temperature of the weld area between passes" (AWS, 2010d). The maximum interpass temperature is the temperature beyond which welding should not be resumed before the weld area is allowed to cool. Excessive interpass temperatures exert an effect similar to that of high heat input—the cooling rate is decreased, and the mechanical properties of the weld metal may deteriorate. Accordingly, AWS D1.8, clause 6.7, limits the maximum interpass temperature to 550°F (290°C) unless a higher temperature has been qualified by test.

11.5.5 Intermix Testing

When self-shielded flux-cored arc welding (FCAW-S) weld deposits are mixed with weld metal deposited by other processes, the fracture toughness of the composite weld metal may deteriorate as compared to the weld metal made by either process alone. Emphasis is placed on "may" because there are combinations of FCAW-S and other processes that produce acceptable results. To ensure that the composite weld metal has acceptable fracture toughness levels, AWS D1.8, Annex B, requires a test be used to determine if the weld metal from the two processes is compatible. The testing involves a single test plate that is welded with both processes, with CVN specimens that are extracted in the region of maximum interaction. Note that AWS D1.8 does not require testing of self-shielded FCAW (FCAW-S) electrodes that are used with other FCAW-S electrodes. For example, E71T-8 weld deposits can be intermixed with E70T-6 deposits.

Intermixing occurs under conditions such as the following:

- Tack welding is done with SMAW or GMAW, and the joint is filled with FCAW-S.
- FCAW-S weld deposits are repaired by a non-FCAW-S process such as SMAW.
- A box column is welded with SAW in the shop, and in the field, the beam-to-column weld intersects the SAW seam, where the field welding process is FCAW-S.
- A shop-welded single-plate shear connection is made with gas-shielded FCAW (FCAW-G), and the shear connection is used as part of the backing for a field-welded beam web-to-column flange connection; FCAW-S is used for the field welding.

These examples are illustrative and are not comprehensive; other possible combinations exist.

AWS D1.8 mandates that the specific order of intermix be tested when different processes are used. For example, if FCAW-S is used in the root and the joint is completed with FCAW-G, then the test to support this combination must have FCAW-S in the root and FCAW-G for the fill passes; a test of FCAW-G in the root and FCAW-S as the fill would not be an acceptable intermix test in this situation.

Some filler metal manufacturers have performed various intermix tests and the results are available to the contractor to support intermixed applications. Alternately, the tests may be run by the contractor or by a third party. AWS D1.8 permits the use of procedure qualification tests that involve intermixed weld metal to be used in lieu of AWS D1.8, Annex B, testing, and also permits the use of other tests when approved by the engineer.

11.5.6 Detailing Requirements

AWS D1.8 provides requirements for the following connection details:

- Corner clips of continuity plates and stiffeners (clause 4.1)
- Transitions in thicknesses and widths* (clause 4.2)
- Joint details for doublers (clause 4.3)
- Weld access holes* (clause 6.11)
- Removal of backing and weld root treatment* (clause 6.13)

- Reinforcing fillet welds at removed weld backing locations* (clause 6.14)
- Fillet welds at left-in-place steel backing locations* (clause 6.15)
- Weld tabs* (clause 6.16)
- End dams (clause 6.17)

The items noted with an asterisk (*) are applicable, either fully or in part, only when specified in the structural design drawings and specifications. When and where these items apply will be covered in the AISC *Seismic Provisions* or in the AISC *Prequalified Connections* standard. The use of the alternate geometry weld access hole for the WUF-W prequalified connection detail will serve as an example. AWS D1.8 prescribes the geometry details that are to be used when this access hole is specified, explains how the hole can be made, and details the quality requirements. The contractor knows when this access hole is to be used because it is specified in the contract documents. The engineer knows when to specify this access hole because it is part of the prequalified requirements of the AISC *Prequalified Connections* standard. For example, removal of steel backing and the treatment of the weld root are covered in detail in AWS D1.8, clause 6.13, and the application of a subsequent reinforcing (or contouring) fillet is discussed in AWS D1.8, clause 6.14. However, backing removal is not required until the engineer specifies backing removal in the contract documents—see AISC *Seismic Provisions* Section A4.2(g) and AWS D1.8, clause 1.4.1(5).

The coverage of weld access holes in AWS D1.8 includes shape options, quality requirements and repair procedures. The shape is to be that specified in the structural drawings and specifications. Three shape options are provided in D1.8: (1) the standard AWS D1.1 geometry; (2) an alternate geometry as illustrated in AWS D1.8, Figure 6.2; and (3) a special geometry as specified in the contract documents. The standard AWS D1.1 geometry is the default condition: If nothing is specified in the contract documents, the contractor will likely use this standard geometry. However, the contractor has the option to use the alternate geometry according to AWS D1.8, clause 6.11.1.1. The alternate geometry illustrated in D1.8, Figure 6.2, and shown in Figure 11-5 of this Guide, is sometimes referred to as the FEMA rat hole because it was first conceptualized as part of the FEMA-sponsored investigations after Northridge (Ricles, 2000). This access hole geometry is one of the prequalified conditions associated with the welded unreinforced flange–welded web (WUF-W) moment connection, and it may be used with other moment connections, although its use is not a requirement for other prequalified connection details. The third option of a special geometry as specified in the contract documents was extended for connection details not prequalified by the AISC *Prequalified Connections* that require a unique weld access hole geometry.

The prequalified bolted unstiffened and stiffened extended end-plate moment connections prohibit the use of a weld access hole—see AISC *Prequalified Connections* Section 6.9.7(1) and Section 11.8.4 of this Guide—as does the ConXtech® ConXL™ moment connection—see AISC *Prequalified Connections* Section 10.6 and Section 11.8.6 of this Guide.

11.5.7 Fabrication Requirements

Protected Zone Restrictions

To ensure that the protected zone is free of unacceptable stress raisers, restrictions are placed on what is permissible in this region. In a general way, the workmanship and quality requirements of AWS D1.1 limit the stress raisers that can be created in welds or on thermally cut surfaces. AWS D1.8 provides specific requirements for the protected zone

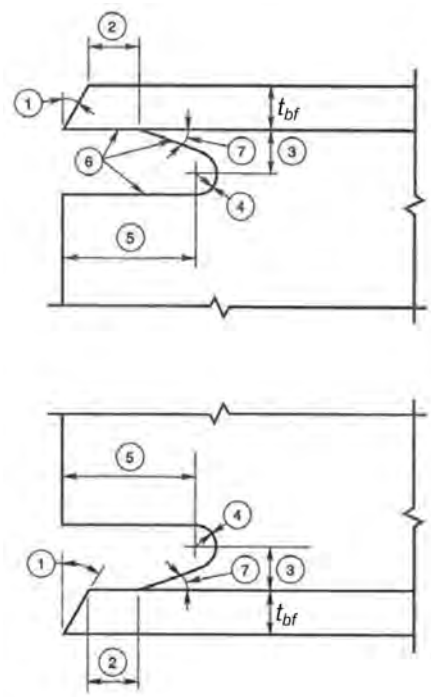

Notes:
1. Bevel as required for the WPS.
2. t_{bf} or ½ in. (12 mm), whichever is larger (plus ½ t_{bf}, or minus ¼ t_{bf}).
3. The minimum dimension shall be ¾ t_{bf}, or ¾ in. (20 mm), whichever is greater, The maximum dimension shall be t_{bf} [+¼ in. (6 mm)].
4. ⅜ in. (10 mm) minimum radius (–0, +unlimited).
5. 3 t_{bf} [±½ in. (12 mm)].
6. See 6.10.2.1 for surface roughness requirements.
7. Tolerances shall not accumulate to the extent that the angle of the access hole cut to the flange surface exceeds 25°.

Fig. 11-5. Alternate weld access hole geometry.

with respect to tack welding restrictions, prohibition on attachments, and repairs to the protected zone. Tack welding in the protected zone is prohibited outside the weld joint unless required or permitted by the engineer. The general rule, therefore, is to place all tack welds inside the weld joint where they are covered by, and become part of, the final weld. Miscellaneous attachments in the protected zone are prohibited. Such attachments include welded studs for composite decks, brackets for the attachment of façade, and hangers for sprinklers systems. Erection aids are similarly prohibited in the protected zone unless permitted by the engineer. Temporary perimeter fall-protection systems cannot be welded to the protected zone unless permitted by the engineer.

As was seen in the two previous paragraphs, AWS D1.8 extends to the engineer the authority to approve alternatives to the standard practices, which are generally presented as prohibitions. There may be situations where practical alternatives are nonexistent and welding in the protected zone is required. When this is the case, welding techniques appropriate for the application must be developed, and in most cases, the welds should be removed after they have served their function. The guidelines contained in D1.8, clause 6.18, for repairs in the protected zone may be helpful in developing procedures for welding in the protected zone.

One notable exception to the general prohibition of welds in the protected zone is that of arc spot welds (puddle welds), which are permitted for attaching the deck to supporting steel. Also new in the 2016 *Seismic Provisions* is the allowance for powder-actuated fasteners of diameters up to 0.18 in. (4.6 mm) to be attached to the beam flanges in the protected zone. The allowance for powder-actuated fasteners was made based on research that showed acceptable performance with the fasteners in place (Watkins et al., 2013).

The most commonly encountered problems with protected zone attachments are (1) welded studs and (2) attachments made by contractors other than the steel erector. AISC *Code of Standard Practice* Section 1.11 requires marking of the protected zone in high seismic applications to minimize this possibility (AISC, 2016a). Because the protected zone is often near the end of the beam, this is an inviting location for the attachment of walls and the aforementioned façade attachments. The general contractor should communicate to those associated with these operations the importance of avoiding such attachments within the protected zone.

Repairs in Protected Zones

When construction errors necessitate a repair in the protected zone, AWS D1.8, clause 6.18, imposes a series of requirements on such repairs. Repairs may be necessary because of misplaced tack welds, removal of unacceptable attachments, or repair of roughly cut edges.

Whenever possible, it is preferable and encouraged to make repairs by grinding rather than welding. Grinding eliminates the possibility of introducing further problems that can result from improper repair welding. Acceptable configurations of the resulting cavity are prescribed. The goal is to achieve a smooth, gradual depression, avoiding abrupt transitions that are perpendicular to the stress field.

Deeper defects require repair by welding. Requirements for defect removal, minimum preheat levels, acceptable filler metals for repair welding, and grinding to remove the weld reinforcement followed by magnetic particle testing (MT) of the repair region is specified in AWS D1.8, clause 6.18.

AWS D1.1, clause 5.25.3, defines conditions wherein the engineer must be notified before the repair is executed. Typical repairs in the protected zone generally will not be so extensive as to require the engineer's approval; however, if pieces are to be removed and replaced to correct for problems in the protected zone, this clause would apply. Repairs that will require the engineer's approval should be approached with caution.

11.6 AISC *SEISMIC PROVISIONS* WELDING REQUIREMENTS

11.6.1 Overview

The AISC *Seismic Provisions* prescribe welding-related details that must also be considered beyond what is contained in AWS D1.8, including where backing and weld tabs must be removed, which welds are demand critical, and other factors. Further, the AISC *Seismic Provisions* require the identification of components on a structure that will affect the welding done by the contractor, including identification of elements that comprise the seismic force-resisting system (SFRS), protected zones, the LAST, shapes of weld access holes, and other details. The preceding list is not comprehensive in discussing all the welding-related requirements contained in the AISC *Seismic Provisions*, but rather is provided to illustrate that for welded connections intended for seismic service; both the AISC *Seismic Provisions* and AWS D1.8 requirements must be considered.

In general terms, the AISC *Seismic Provisions* describe what is required, and AWS D1.8 prescribes how the task is to be accomplished. For example, the AISC *Seismic Provisions* may require backing removal from certain joints, while AWS D1.8 identifies acceptable methods for accomplishing the task of backing removal. When backing removal is required, AWS D1.8 stipulates that this must be so stated in the contract documents—see AISC *Seismic Provisions* Section A4.2(g) and AWS D1.8, clause 1.4.1(5).

11.6.2 The Transitional Period

After the 1994 Northridge earthquake and until about 2010, there was considerable fluidity in applicable seismic codes and standards. In 2000, for example, AWS D1.8 did not exist (the first edition was issued in 2005). In the absence of a

seismic welding standard, the 2002 AISC *Seismic Provisions* (AISC, 2002) contained Appendix X, which covered weld metal and welding procedure toughness verification testing and later, the 2005 *Seismic Provisions* (AISC, 2005a) contained Appendix W, which codified welding requirements that were generally similar to those recommended in FEMA 353; the consolidation of welding requirements into a single appendix was done so it could be deleted when a welding standard was available.

When the 2005 AISC *Seismic Provisions* was ready for approval, AWS D1.8:2005 (AWS, 2005d) was a few months short of completion. Accordingly, the *Seismic Provisions* retained Appendix W, which generally contained the requirements that would be incorporated into AWS D1.8:2005. In 2010, the *Seismic Provisions* (AISC, 2010a) deleted Appendix W and referred to AWS D1.8:2009 (AWS, 2009) for welding requirements. The seismic-related welding requirements in terms of acceptable weld metal properties are contained in AWS D1.8 and are no longer listed in the AISC *Seismic Provisions*; however, many welded connection details continue to be maintained in the *Seismic Provisions*.

Contract documents created during this transitional period should not be used on current projects. Model project specifications are best if they are up-to-date and reference the most recent standards.

11.6.3 Filler Metals

For filler metal related issues, AISC *Seismic Provisions* Section A3.4 invokes the requirements of AWS D1.8 by reference and contains no requirements beyond those specified in AWS D1.8.

11.6.4 Structural Design Drawings and Specifications

The AISC *Seismic Provisions* require that certain items be included in the contract documents; welding-related information includes the following:

- Designation of the SFRS [Section A4.1(a)]
- Identification of the members and connections that are part of the SFRS [Section A4.1(b)]
- Locations and dimensions of protected zones [Section A4.1(c)]
- Configuration of the connections [Section A4.2(a)]
- Locations of demand critical welds [Section A4.2(c)]
- LAST of the steel structure, if the structure is not enclosed and maintained at a temperature of 50°F (10°C) or higher [Section A4.2(f)]
- Locations where weld backing is required to be removed [Section A4.2(g)]
- Locations where fillet welds are required when weld backing is permitted to remain [Section A4.2(h)]
- Locations where fillet welds are required to reinforce groove welds or to improve connection geometry* [Section A4.2(i)]
- Locations where weld tabs are required to be removed [Section A4.2(j)]
- Splice locations where tapered transitions are required [Section A4.2(k)]
- The shape of weld access holes, if a shape other than those provided for in the AISC *Specification* is required [Section A4.2(l)]
- Joints or groups of joints in which a specific assembly order, welding sequence, welding technique, or other special precautions are required, where such items are designated to be submitted to the engineer of record* [Section A4.2(m)]

These items have been previously discussed in this Chapter, with the exception of the two designated with asterisks (*), which are discussed in the following paragraphs. Both of these are residual carryovers from early post-Northridge days when theories and speculations were widespread, but data were not.

Regarding AISC *Seismic Provisions* Section A4.2(i) and the need to identify locations where fillet welds are required to reinforce groove welds or to improve connection geometry, this was an outgrowth of concerns that the through-thickness stress imposed on the column flange at the beam-to-column moment connections needed to be reduced. If this reduction was necessary, one way to accomplish it would be to require fillet welds on top of CJP groove welds to increase the size of the footprint of the weld on the column face. However, research indicated that the through-thickness tensile strength of hot-rolled shapes for columns was adequate (Lee et al., 2002). None of the AISC *Prequalified Connections* prequalified details require additional fillet welds to reinforce groove welds, except as discussed in the next paragraph.

When steel backing is removed, it is routine to gouge the root to sound metal and add a reinforcing fillet. AWS D1.8 separates the backing removal and back welding operations, discussed in clause 6.13, from the application of the reinforcing fillet weld, which is addressed in clause 6.14. Accordingly, the application of this reinforcing fillet weld should be identified in contract documents. AISC *Prequalified Connections* requires backing removal and reinforcing fillet welds on several prequalified moment connection details.

Regarding AISC *Seismic Provisions* Section A4.2(m) and the specification of assembly order, welding sequence, welding technique, or other special precautions, this too was an outgrowth of early speculations about the causes of the Northridge damage and possible solutions. Some suggested that if beam-to-column connections were made by first welding the flanges and then the webs, the damage could be

reduced or eliminated. Others were equally passionate that the opposite was the case—webs should be welded before flanges. If the webs were bolted, there was speculation about the sequence of bolt tensioning, whether before or after the flanges were welded. Others speculated that the solution was to use SMAW versus FCAW, or restrict the diameter of FCAW electrode that was used. Higher preheats for welding, preheating with electric blankets, controlled post-weld cooling rates, post heats for hydrogen release, and weld peening were all postulated as possible solutions to overcome the observed cracking (SAC, 1995); AISC *Seismic Provisions* Section A4.2(m) allows the engineer to specify such practices when desired. For the prequalified details shown in the AISC *Prequalified Connections*, there are no special requirements that would need to be specified in accordance with AISC *Seismic Provisions* Section A4.2(m). It is possible that qualified welded connections (i.e., those tested in accordance with AISC *Seismic Provisions* Chapter K) may have constraints that fit into this category, or future developments may result in connections where special welding procedures must be followed to achieve the desired results. For most projects, nothing needs to be added to contract documents to address the topics listed under AISC *Seismic Provisions* Section A4.2(m).

11.6.5 Fabrication and Erection Welding Requirements

AISC *Seismic Provisions* Chapter I contains requirements for fabrication and erection, including welding-related issues; the requirements are not repeated here. Two items are unique to the AISC *Seismic Provisions*:

- WPS are subject to engineer approval (Section I2.3).
- Weld tabs are to comply with AWS D1.8, with an exception that deals with the length of tab permitted to remain after removal (Section I2.3).

11.6.6 Inspection Requirements

AISC *Seismic Provisions* Chapter J, analogous to AISC *Specification* Chapter N, contains many welding-related requirements; the requirements are not repeated here (Chapter N is discussed in Section 10.9.3 of this Guide). Some of the inspection requirements that differ from those specified in AISC *Specification* Chapter N are discussed in the following paragraphs.

Submittals

AISC *Seismic Provisions* Section J2.1 stipulates that required submittals include WPS; standard electrode certificates of conformance; reports of high and low heat input tests for filler metals used for demand critical welds; manufacturer's product data sheets for SMAW, FCAW and GMAW composite electrodes; and special welding sequence procedures when applicable.

Inspection Task Checklists: Document

Inspection checklist tables are supplied in AISC *Seismic Provisions* Chapter J; they are the same in concept as the checklist tables contained in AISC *Specification* Chapter N (see Section 10.9 of this Guide). Both tables use the concepts of observe and perform; the AISC *Seismic Provisions* add a third term—document. When designated with a "D" in the checklist tables, document tasks require that "The inspector shall prepare reports indicating that the work has been performed in accordance with the contract documents." The requirement to document is only contained in Table J6.3, which summarizes the after-welding tasks and includes the following tasks to be documented by both QC and QA:

- Visual inspection of completed welds
- *k*-area inspection (when welding has been performed in the area)
- Placement of reinforcing or contouring fillet welds (when required)
- Removal of backing and weld tabs, and placement of fillet welds (when required)

Additionally, QA documentation of repair operations is required as listed in AISC *Seismic Provisions* Table J6.3. It is not necessary to document fit-up, welding parameters, or other tasks that are not identified as "D" tasks.

Inspection Task Checklists: P/O

AISC *Seismic Provisions* Table J6.1 includes tasks identified as P/O, which refers to perform/observe, a term not used in AISC *Specification* Chapter N. Only two tasks contain the P/O designation, and both involve pre-welding checks of the joint fit-up: one involving weld joints that receive groove welds and the other involving weld joints that will receive fillet welds. The tasks in the tables are assigned to inspectors, and in the case of the P/O assignment, it is assigned to QC inspectors. A footnote to the P/O tasks explains the concept as follows:

> Following performance of this inspection task for ten welds to be made by a given welder, with the welder demonstrating understanding of requirements and possession of skills and tools to verify these items, the Perform designation of this task shall be reduced to Observe, and the welder shall perform this task. Should the inspector determine that the welder has discontinued performance of this task, the task shall be returned to Perform until such time as the Inspector has re-established adequate assurance that the welder will perform the inspection tasks listed.

The logic behind making inspection of the pre-welding fit-up (which is actually more than merely fit-up) a perform task is compelling; if the joint is not proper before welding, additional problems will likely follow. For groove welds, the outlined tasks include verification of joint dimensions (alignment, root opening, root face, bevel angles), cleanliness (condition of steel surfaces), tack welding (quality and location), and backing type and fit (if applicable). Similar items are listed for joints that will receive fillet welds, including verification of root gaps.

To accomplish the P/O tasks, the QC inspector is to perform the joint fit-up tasks for the first 10 welds to be made with each welder. The welder is to also perform these tasks. After 10 welds, and when the inspector is convinced the welder is capable of making these inspections, the welder can assume this perform task and the inspector can inspect on an observe frequency.

Extent of Inspection and NDT Methods

This Guide does not repeat the inspection requirements of AISC *Seismic Provisions* Section J6.2; emphasized in the following paragraph are differences in the requirements of the AISC *Seismic Provisions* as compared to the AISC *Specification*.

Ultrasonic Testing (UT)

In addition to the inspections mandated by AISC *Specification* Chapter N (see Section 10.9.3 of this Guide), the AISC *Seismic Provisions* extend the UT requirement to other welded connections, including the following:

- 100% UT of all CJP groove welds when applied to material 5⁄16 in. (8 mm) or thicker, regardless of the loading and regardless of the ASCE risk category; an exception is provided for welds in ordinary moment frames of structures with ASCE risk categories of I and II (Section J6.2a).
- 100% UT of all PJP groove welds used in column splices and column-to-base plate welds (Section J6.2b).
- UT inspection for lamellar tearing and laminations for CJP welded connections loaded in tension; this inspection is performed after welding and is required when base metal that is strained by welding in the through-thickness direction is greater than 1½ in. (38 mm) and when the connected material that contains the CJP groove weld is ¾ in. (19 mm) or greater. The inspection is intended to detect "…discontinuities behind and adjacent to the fusion line of such welds" (Section J6.2c).

Magnetic Particle Testing (MT)

The AISC *Seismic Provisions* requires a significant number of magnetic particle testing. The requirements are not repeated here but are listed in AISC *Seismic Provisions* Section J6.2. Inspections include the following:

- 25% MT in addition to UT of beam-to-column groove welds, with some exceptions (Section J6.2a).
- 100% MT of thermally cut beam copes and weld access holes on thicker steel shapes or plates. These inspections are permitted to be made with dye penetrant (PT) in lieu of MT (Section J6.2d).
- 100% MT of weld tab removal sites, with some exceptions (Section J6.2f).

The rate of MT may be reduced when consistent quality is achieved according to AISC *Seismic Provisions* Section J6.2h.

The emphasis on MT reflects the fact that for identically sized flaws, fracture mechanics analysis suggests that a surface-breaking flaw creates a stress intensity that is 50% greater than a buried flaw. Furthermore, while UT is effective at detecting flaws within the thickness of the material, it is less effective in detecting flaws near the surface of the steel. Accordingly, for beam-to-column connections, both UT and MT are required, albeit at different frequencies. For thermally cut surfaces and weld tab removal sites, the concerns are with surface discontinuities only; thus MT is specified and UT is not. Where PT is permitted in lieu of MT, most contractors will select MT for practical reasons (see Sections 10.4 and 10.5 of this Guide).

11.6.7 Specific Connection Details

The following subsections contain general guidance common to welded connections in seismically resistant frames; specific requirements are contained in the AISC *Seismic Provisions* and should be applied to specific projects. The AISC *Seismic Provisions* contains requirements for many structural systems, including moment frames, braced frames and shear walls, both in steel systems and in steel-concrete composite systems. Provisions are included for ordinary, intermediate, and special moment frames. For braced frames, there are provisions for concentrically braced and eccentrically braced systems. The preceding list is not comprehensive but is provided in light of this caveat—the applicability of the general guidance offered in the following sections as applied to specific welded connection details must be reviewed before the guidance is applied to a specific connection in a specific structural system.

Column Splices

Column splices are generally required to be joined with CJP groove welds, and such welds are generally designated as demand critical depending on the seismic system involved. For CJP welded column splices, weld access holes must be supplied, either to permit welding from either side of the flanges or to permit backing to be added to the root side of the joint. Weld tabs are generally required and removed after welding. Backing is generally permitted to remain in place.

Column splices are generally required to be located at least 4 ft (1.2 m) away from beam-to-column connections for moment frames; exceptions exist for low floor-to-floor heights, CJP welded splices, and composite systems as discussed in AISC *Seismic Provisions* Section D2.5a. Because this is a field weld, locating the weld at a comfortable height for the welder is preferred; keeping the splice location above the height for perimeter fall protection is practical.

The 2016 AISC *Seismic Provisions* incorporated a new provision in Sections E2.6g, E3.6g and E4.6c, which allowed for column splices in intermediate and special moment frames and special truss moment frames to be made with partial-joint-penetration (PJP) groove welds. The PJP splice option is permitted when there is a change in column size; the required PJP are large in size. Major details associated with the PJP option include the following:

- The thicker flange is at least 5% thicker than the thinner flange [Section E3.6g.2].
- The PJP size is at least 85% of the thinner flange [Section E3.6g.2(a)].
- For single-sided PJP, the flange thickness is equal to or less than 2½ in. (63 mm), and weld access holes are not required [Section E3.6g.2(e)].
- For double-sided PJP, weld access holes are required, and the unfused root region of the PJP is to be centered in the flange thickness [Section E3.6g.2(d)].
- A smooth transition of the weld face to the flange is required [Section E3.6g.2(b)].
- Flanges of different widths are tapered [Section E3.6g.2(c)].
- Web welds may be CJP or PJP; if PJP are used, restrictions similar to the flange PJP apply [Sections E3.6g.3 and E3.6g.4].
- The PJP groove weld splices are subject to 100% UT inspection (Section J6.2b).

The potential advantages of the PJP option include some savings in the required volume of weld metal as compared to a CJP alternative. Additional erection benefits should also be derived; while a joint for a single-sided CJP groove weld requires a root opening that must be momentarily maintained until the welding begins, a joint that will receive a PJP groove weld can be fit tight. A single-sided prequalified CJP groove weld requires steel backing and a double-sided detail requires welding from both sides, and either option requires a weld access hole, whereas a single-sided PJP groove weld requires no access hole. In 2017, it is expected that erection economics will determine how popular this detail becomes.

The PJP groove weld column splice is also required to be UT inspected. Normally, UT of PJP groove welds is discouraged as the naturally occurring lack of fusion plane in the root complicates the interpretation of the results (see Section 10.7 of this Guide). To avoid ongoing disputes over the significance of root indications, special techniques will need to be developed and implemented; such techniques were under development in mid-2016.

Doubler Plate Weld Details

The AISC *Seismic Provisions* contains specific column doubler plate details that are to be applied for special moment resisting frames. Several doubler-plate configurations are possible: in contact with the web, or spaced away from the web; with or without continuity plates; if with continuity plates, with the doubler extending above the continuity plate or with the doubler between the continuity plates. Possible welds include CJP groove welds, PJP groove welds, fillet welds, and doubler plate welds, as will be discussed. Welds are always required along the edges of the doubler plate to the flange; welds may or may not be required along the ends of the doubler according to AISC *Seismic Provisions* Section E3.6e.3. The in-contact doubler plate detail is defined in AISC *Seismic Provisions* Section E3.6e.3 as having a "gap of up to 1⁄16 in. (2 mm) between the doubler plate and the column web." When making doubler plate welds, whether for a seismic application or not, consideration of the *k*-area is required (see Section 4.3.3 of this Guide).

The concept of a doubler plate weld was introduced in the 2010 AISC *Seismic Provisions* and later in AWS D1.8:2016. The details of this prequalified weld detail are shown in AWS D1.8, Figure 4.3. Its inclusion in AWS D1.8 confirms that longitudinal doubler plate welds are prequalified joint details, suitable for use with prequalified WPS. See Section 4.3.3 of this Guide.

Continuity Plate Weld Details

Continuity plate welds for intermediate moment frames and special moment frames are required to have CJP groove welds between the continuity plate and the column flanges as stipulated in AISC *Seismic Provisions* Section E3.6f. The weld of the continuity plates to the column web can be a fillet, a PJP or CJP groove weld, or any combination thereof. Corner clips should be detailed with snipes that will preclude accidental welding in the *k*-area. AISC *Seismic Provisions* Section I2.4 requires that corner clip details be detailed in accordance with AWS D1.8, clause 4.1.

Terminating CJP groove welds near the web-flange interface can be difficult. Weld tabs are difficult to install in the clip region, and subsequent removal of weld tabs is equally difficult. AWS D1.8, clause 6.16.4, precludes tabs at this location unless required or permitted by the engineer. If tabs are used, removal of the tabs is prohibited unless required by the engineer. The AWS D1.8 requirements are intended to discourage the use of weld tabs and their subsequent removal as their use may result in more harm than good. The issue of terminating the groove weld-to-column flanges, when weld tabs are not used, is addressed in AWS D1.8, clause C6.16.4, and illustrated in AWS D1.8, Figure C-6.3.

Base Plate Welds

Column-to-base plate welds are generally required to meet the same requirements as column splices from a design perspective. Several practical differences make base plate welds different than column splices: base plate welds are generally shop (versus field) welds, placed into T-joints (versus butt joints) with the groove welds made in the flat (versus horizontal) position. The welds are generally required to be CJP groove welds, required to be demand critical, and require welds tabs to be used and then removed. Steel backing is usually required to be removed, but permitted exceptions to the backing removal requirement are routinely used. Backing located on the inside of flanges and weld backing on the web of I-shaped sections need not be removed if the backing is attached to the column base plate with a continuous 5⁄16-in. (8 mm) fillet weld. This is essentially treated the same way as left-in-place backing to the top flange of many prequalified moment connection details. It is prohibited to fillet weld backing to the inside of column flanges. Weld backing located on the inside of HSS columns need not be removed in accordance with AISC *Seismic Provisions* Section D2.6.

Because column-to-base plate welds are typically demand critical, when double-sided joints are used and welding through the weld access hole is required, welders are often mistakenly required to pass the AWS D1.8, Annex D, welder qualification tests (see Section 11.5.3 of this Guide). This is a misapplication of AWS D1.8 because base plate welds are not beam flange-to-column flange welds.

For special cantilevered column systems, there is a protected zone around the column-to-base plate welds as stipulated in AISC *Seismic Provisions* Section E6.5c.

11.7 AISC *PREQUALIFIED CONNECTIONS* WELDING REQUIREMENTS

AISC *Prequalified Connections* invokes by reference the AISC *Specification*, the AISC *Seismic Provisions*, AWS D1.1, and AWS D1.8. Thus, all the applicable requirements of these standards apply when the prequalified connections of the AISC *Prequalified Connections* standard are used. The requirements of these other standards have been previously reviewed and will not be discussed in this section, except to note that requirements contained in the AISC *Seismic Provisions*, such as backing removal, treatment of left-in-place backing, weld access hole configurations, etc., also apply to prequalified connections. In some cases, the AISC *Prequalified Connections* provides alternates to the details prescribed in the AISC *Seismic Provisions*, in which case the more specific requirement of the AISC *Prequalified Connections* apply; this philosophy is not specifically stated, but it is suggested in various User Notes, particularly in reference to demand critical weld designations (see User Notes in AISC *Seismic Provisions* Sections E2.6a and E3.6a).

There are weld details associated with certain of the prequalified connections that are unique and require special considerations; those are addressed in the sections that follow.

11.8 WELDED DETAILS FOR PREQUALIFIED CONNECTIONS

11.8.1 Reduced Beam Section Moment Connection

The reduced beam section (RBS) moment connection is a prequalified connection detail covered in AISC *Prequalified Connections* Chapter 5 that utilizes a reduced section in the beam where the beam flanges have been selectively reduced; yielding and hinge formation are intended to occur in the reduced section as shown in Figure 11-6. The beam flanges are joined to the column flanges by demand critical CJP

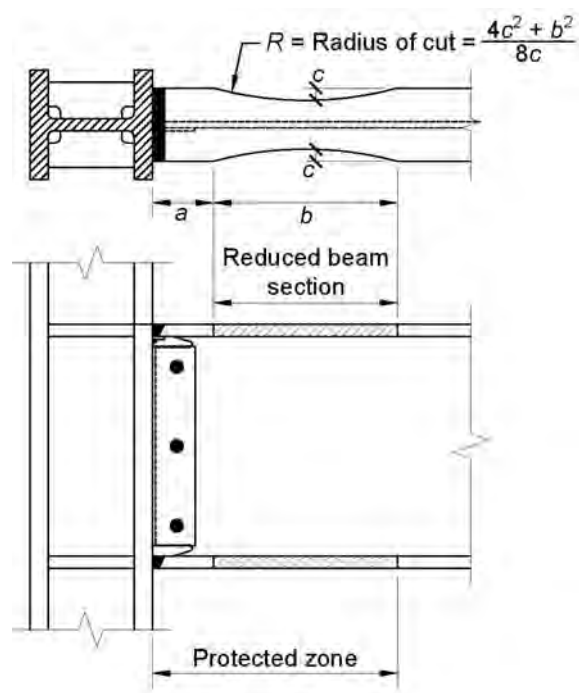

Fig. 11-6. RBS connection.

groove welds; backing is removed from the bottom beam flange connection while backing is permitted to remain in the top beam flange connection, provided a fillet weld is placed between the backing and the column flange. A standard access hole is used. AISC *Prequalified Connections* Section 5.6(2)(a) requires the beam web-to-column flange connection to have a CJP groove weld for special moment frame (SMF) applications. Alternatives are permitted for intermediate moment frame (IMF) applications as outlined in AISC *Prequalified Connections* Section 5.6(2)(b).

The beam web-to-column flange connection will be discussed, as will be the thermal cutting of the reduced section of the flange.

Beam Web-to-Column Flange Connection Details

The RBS connection is required to have a CJP groove welded connection of the beam web to the column flange for SMF applications; IMF details will be discussed separately. A number of details must be considered for this connection as the single-plate shear connection used for temporary erection becomes the steel backing for the field-made beam web-to-column flange connection. Factors to consider include the following:

- Dimension of the single-plate shear connection
- Detailing of the single-plate shear connection to column flange weld
- Detailing of the beam web-to-column flange CJP groove weld
- Potential weld metal intermix concerns between the shop-made single-plate shear connection weld and the field-made beam web-to-column flange weld

These topics will be discussed in the following subsections.

Dimension of the Single-Plate Shear Connection

AISC *Prequalified Connections* Section 5.6(2)(a) requires the single-plate shear connection to be at least ⅜ in. (10 mm) thick. The single-plate shear connection is to extend between the access holes; single-plate shear connectors that are too long and enter into the space of the weld access holes may make it difficult to insert backing to the top beam flange-to-column flange weld or make it difficult to deposit quality weld metal in the bottom beam flange-to-column flange weld. Single-plate shear connectors that are too short will make it impossible to make a full-length weld of the beam web-to-column flange.

Detailing of the Single-Plate Shear Connection to Flange Weld

Several weld types can be used to make the shop-welded single-plate shear connection-to-column flange weld. Options include CJP, PJP and fillet welds, and each option could be a single- or double-sided weld. Of the options, two are practical and will be discussed: single-sided PJP and double-sided fillets. Each option has advantages and limitations, with the single-sided PJP generally being preferred.

As shown in Figure 11-7, the single-sided PJP option involves the placement of a groove weld on the opposite side of the single-plate shear connection from the side that will receive the beam. While the shear plate requires beveling, all the welding can be done without rotating the column in the shop. In the field, there are no clearance problems when the beam web is attached to the PJP welded single-plate shear connection. The one-sided weld will be subject to angular distortion, and there is the possibility that the single-sided weld may be damaged in shipping or erection, because the weld will offer little resistance to tearing if loaded about the weld root.

For the PJP option, the single-plate shear connection thickness must be sufficient to permit a PJP of adequate size to be deposited, including consideration of the root fusion effects in accordance with AISC *Specification* Table J2.1 and with a sufficient remaining root face dimension to preclude melt-through; a minimum of ⅛ in. (3 mm) should be allowed to prevent melt-through.

A double-sided fillet weld as shown in Figure 11-8 is the other practical option. The double-sided configuration allows for easier control of distortion. As compared to the single-sided PJP option previously discussed, the double-sided fillet weld is more resistant to abuse during shipping, handling and erection.

As can be seen in Figure 11-8, the two welds shown are different sizes for an important reason—the fillet on the beam side of the single-plate shear connection must be small

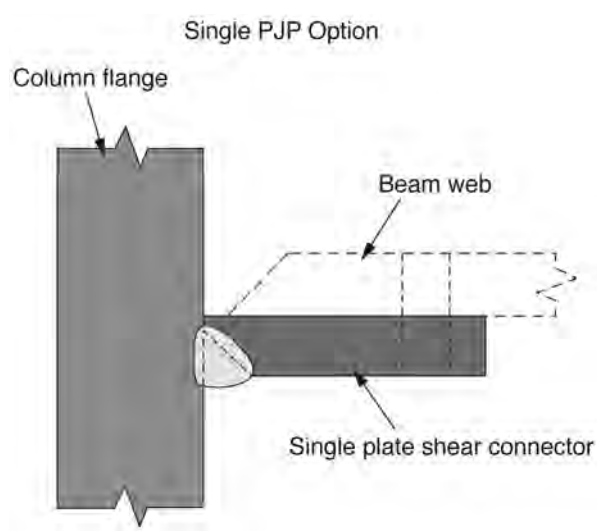

Fig. 11-7. Shear plate connected with a single-sided PJP.

enough to preclude interference when the beam is installed in the field. Typically, the beam web-to-column flange weld will be detailed as a TC-U4a prequalified detail, with a ¼-in. (6 mm) root opening and a 45° included angle; for this detail, the as-fit tolerance includes a minus 1⁄16-in. (2 mm) variation on the root opening. Thus, a 3⁄16-in. (5 mm) fillet weld is the largest size possible that will not create interference with the beam web when field assembled, if the full extent of allowed as-fit tolerances is utilized.

A 3⁄16-in. (5 mm) fillet weld can be applied to a shear plate of up to ½ in. (13 mm) and still be in compliance with the minimum fillet weld sizes required by AISC *Specification* Table J2.4. Thicker single-plate shear connectors, however, will require ¼-in. (6 mm) or larger fillets, which allows for no variation in the field fit-up of a standard TC-U4a detail. Although AISC *Specification* Table J2.4 has weld sizes based on the thinner material being joined, thicker flanges may make it difficult to deposit small fillet welds.

Detailing of the Beam Web-to-Column Flange Connection

The standard ¼-in. (6 mm) root opening and a 45° included angle dimension can be increased by the as-fit tolerances, which is the recommended approach. The TC-U4a allows for an as-detailed increased root opening of 1⁄16 in. (2 mm), which should be applied to the beam web-to-column flange CJP groove weld in all cases when the double-fillet weld option is utilized, in order to eliminate field fit-up issues. Where interferences occur, the fillet weld can be ground to a size that is acceptable.

When the CJP groove weld is completed in the field, the shop-produced fillet weld will become part of the field-produced groove weld, which will be ultrasonically inspected. If the fillet weld had any root fusion problems (which would be undetected when the fillet welds were visually inspected), the field-produced CJP groove weld may be rejected when UT inspected. If the fillet weld essentially fills the available root opening, the fillet weld toe to the beveled edge of the beam web may create a slag-trapping cavity that also prompts rejection of the CJP groove weld as shown in Figure 11-9.

AISC *Prequalified Connections* Section 5.6(2)(a) does not require weld tabs at the start or finish end of the beam web-to-column flange connection. Ideally, the single-plate shear connection is the same length as the beam web-to-column flange joint although some variation should be expected. There will naturally be some length of groove weld at the end of the joint that is not fully welded or where the weld size is not fully achieved, and some latitude needs to be extended for less than full sized welds in these locations.

Potential Weld Metal Intermix Concerns

The fillet welds are shop welds that would likely be made with FCAW-G or GMAW. The groove weld is a field weld, likely to be made with FCAW-S. Thus, the compatibility of the weld metal from two welding processes must be evaluated (see Section 11.5.5 of this Guide). This alone should not be a reason to preclude the double-fillet option as numerous acceptable examples exist; the issue is raised to make certain intermixing is considered if the double-fillet weld option is used.

RBS Cut Quality

The details of the RBS cut, including how to handle repairs, are defined in detail in AISC *Prequalified Connections*

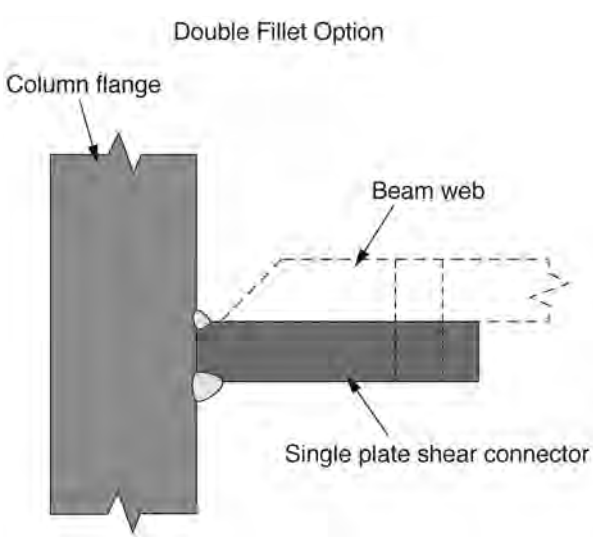

Fig. 11-8. Shear plate connected with two fillet welds.

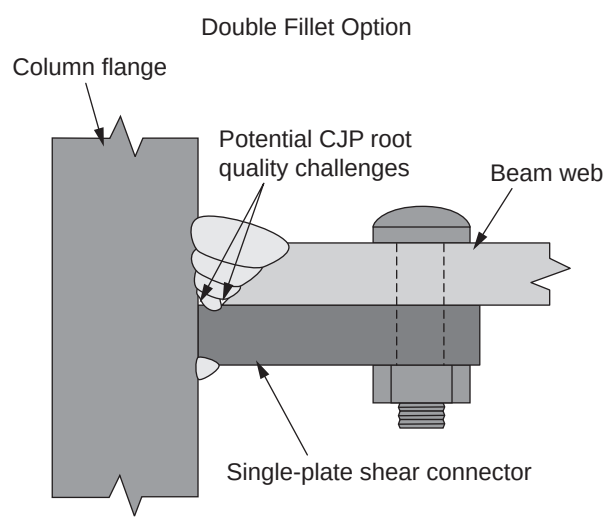

Fig. 11-9. Potential quality problems with the double-fillet weld option.

Section 5.7. The thermal cut associated with making the RBS region is critical in that it is the location where inelastic deformation would be expected to occur in a major seismic event.

Intermediate Moment Frame Detailing

For IMF systems, the aforementioned CJP groove welded web detail may be used for RBS connections, but bolted connections may be used as well. Details of the shop-welded single-plate shear connection for bolted (only) connections include two options: CJP groove welds and double-sided fillet welds with a leg size equal to 75% of the thickness of the single-plate shear connection. These shop welds are likely more expensive to make than are the alternatives associated with the CJP connection of the beam web-to-flange, but field welding is eliminated. The detailing of the beam web needs to consider potential field interference with the shop produced welds.

11.8.2 Bolted Unstiffened and Stiffened Extended End-Plate Moment Connection

The prequalified end-plate moment connections are covered in AISC *Prequalified Connections* Chapter 6. These connections utilize beam end plates that are shop welded; the end plate is field bolted to the column as shown in Figure 11-10. The performance of the end-plate moment connection has been demonstrated to be superior when no weld access hole is provided; weld access holes are therefore prohibited for prequalified end-plate connections according to AISC *Prequalified Connections* Section 6.7.6(1). The beam flanges must be CJP groove welded to the end plate, yet backing is not permitted. AISC *Prequalified Connections* Section 6.7.6(2) requires that the welds are demand critical. Two weld options are provided in AISC *Prequalified Connections* Section 6.7.6(3) for the web welds—CJP groove welds or fillet welds.

A detailed procedure is provided that describes how a continuous CJP groove weld is achieved under the permitted conditions in AISC *Prequalified Connections* Section 6.7.6(2) and (4). The inside face of the flange first receives a 5⁄16-in. (8 mm) fillet weld. From the opposite side, the CJP groove weld root is backgouged to sound metal, which will consist of the previously deposited fillet welds. Backgouging of the root is not required in the flange directly above and below the beam web for a length equal to $1.5k_1$ because it is impossible to gouge to sound metal at this location because of the naturally occurring interface between the beam web and the end plate. At this location, a full-flange thickness PJP groove weld is permitted.

The groove weld detail is not prequalified and thus welding procedure qualification testing per AWS D1.1 is required if the code is followed absolutely. However, AWS D1.1 would require a groove welded butt joint to qualify this PJP groove weld WPS, whereas the production joint is a T-joint, rendering the qualification tests largely meaningless. Mocked-up samples of the joint, followed by ultrasonic testing and then destructive testing that would permit examination of the weld cross section by means of macroetched specimens provide a more viable way of proving the validity of the welding procedures used. This approach, however, is neither supported nor suggested by AWS D1.8 nor the AISC *Seismic Provisions*.

The identification of the center of the width of the beam flange-to-end plate weld as a PJP exempts this region from the UT inspection that is imposed on CJP groove welds.

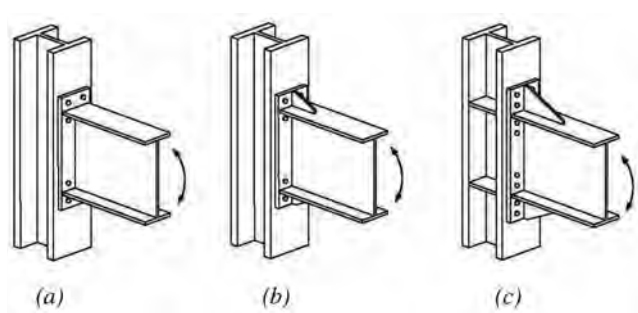

Fig. 11-10. Bolted unstiffened and stiffened extended end-plate moment connection.

11.8.3 Bolted Flange Plate Moment Connection

The prequalified bolted flange plate (BFP) moment connection is covered in AISC *Prequalified Connections* Chapter 7 and utilizes a pair of shop-welded flange plates that are connected to the column; in the field, the beam flanges are bolted to the flange plates as shown in Figure 11-11. A shop welded single-plate shear connection is provided for the beam web connection; in the field, the beam web is bolted to the single-plate shear connection. Several details must be considered when making the shop produced welds, as will be discussed.

Spacing of Flange Plates

The spacing between the flange plates must be sufficient to provide the necessary clearance for insertion of the beam between the flanges in the field. The net section depth must be accommodated as well as the tolerance of the depth of the section. The tolerance for all beam depths is ±⅛ in. (3 mm). Therefore, the difference in depth may be up to ¼ in. (6 mm) from one beam to another. Additionally, flange tilt must be considered, where T and T' are ¼ in. (6 mm)for beams up to 12 in. (300 mm) deep and 5⁄16 in. (8 mm) for beams greater than 12 in. (300 mm) deep. The production variation in fit of the flange plates to the column must be considered. The effects of weld distortion on the orientation

of the flange plate to the column must be considered, realizing that small angular differences at the column/flange plate intersection will be magnified at the end of the flange plate. Finally, the erector needs some clearance between the beam and the flange plates for ease of erection. Shims can be used to account for the gap that will often be present; AISC *Prequalified Connections* Section 7.5.5 permits shims with an overall thickness of ¼ in. (6 mm) maximum.

The fabricator can utilize simple fixtures that clamp to the column and provide the proper orientation of the flange plates to the column. The fixturing can be designed to resist the angular distortion that will inevitably occur during welding.

Beam Flange Plate Welds

AISC *Prequalified Connections* Section 7.5.2 requires that the flange plate-to-column flange welds are CJP groove welds and are demand critical. Backing, if used, must be removed. Whether these are single-sided or double-sided CJP groove welds, work must be performed on both sides of the flange plate.

Shear Plate Welds

AISC *Prequalified Connections* Section 7.5.3 stipulates that the single-plate shear connection-to-column flange connection can be made with a CJP groove weld (single- or double-sided), double-sided PJP groove welds, or double-sided fillet welds. For simplicity and economy, double-sided fillet welds are typical.

11.8.4 Welded Unreinforced Flange–Welded Web Moment Connection

The welded unreinforced flange-welded web (WUF-W) moment connection is detailed in AISC *Prequalified Connections* Chapter 8 and uses CJP groove welds to join the beam flanges to the column, CJP groove welds to join the beam web to the column, a special weld access hole, and a heavy single-plate shear connection that is welded to the beam web and column flange as shown in Figure 11-12. The WUF-W may superficially look like the pre-Northridge connection detail but actually has a number of features that make it distinctively unique, as described in the following sections.

Weld Access Hole

AISC *Prequalified Connections* Section 8.5(2) requires the weld access holes for the WUF-W to conform to the special geometry and quality requirements defined in AWS D1.8. The geometry and quality requirements associated with the required access hole were previously discussed and illustrated (see Section 11.5.6 of this Guide).

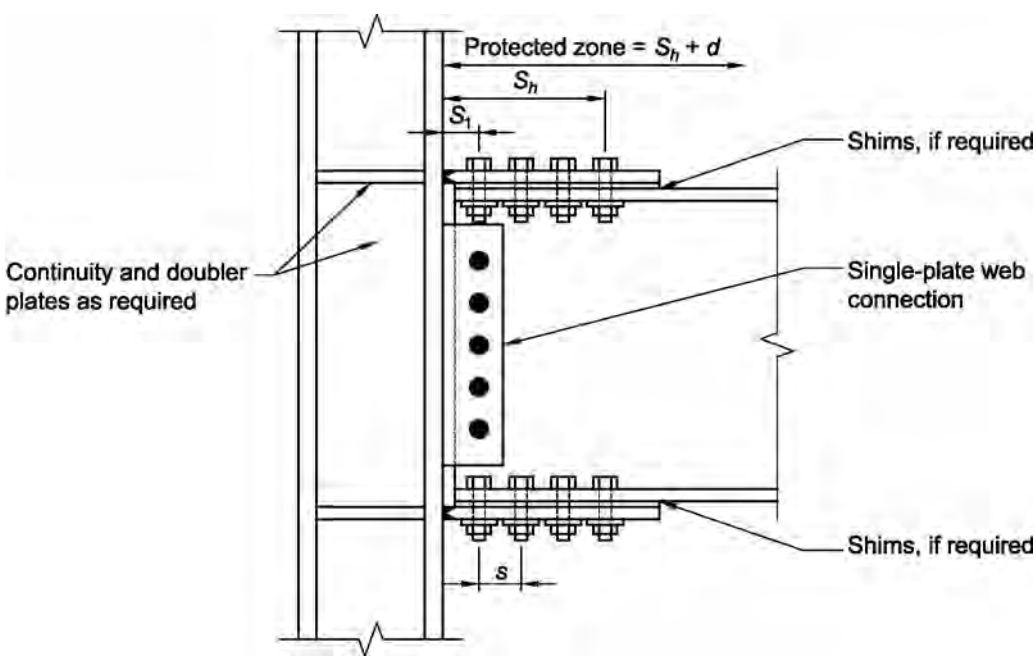

Fig. 11-11. BFP moment connection.

Single-Plate Shear Connection Plate

The trapezoidal-shaped shear connection plate is an essential feature of the WUF-W connection and is illustrated in Figure 11-13.

A shear connection plate is required to be at least equal to the thickness of the beam web, t_{bf}, with a height, h_p, that will allow a minimum of a ¼-in. (6 mm) overlap into the weld access hole, but the overlap is not permitted to exceed ½ in. (13 mm). The width of the shear connection plate is required to extend 2 in. (50 mm) beyond the end of the weld access hole. Because the WUF-W weld access hole is $3t_{bf}$ + ⅜ in. (10 mm), then the shear connection plate must be at least $3t_{bf}$ + 2⅜ in. (60 mm) or, for the case of a W36×150 (W920×224), a minimum of 5 3/16 in. (130 mm). As shown in Figure 11-13, the ends of the connection plate have a 1-in. (25 mm) minimum length from the corner before a 30° slope is cut to form the trapezoidal configuration.

Shear Connection-to-Column Weld

The single-plate shear connection plate is joined to the column flange with a shop-made weld. The type of weld is not prescribed, but the design shear strength of the weld is stipulated in AISC *Prequalified Connections* Section 8.6(2) to be at least $h_p t_p$ $(0.6R_yF_{yp})$, where h_p is the length of the shear connection plate and t_p is the thickness of the shear connection plate. For ASTM A992 material welded with E70 filler metal, the following is obtained:

$$\text{ASTM A992 shear strength} > h_p t_p (0.6R_yF_{yp}) = h_p t_p (0.6)(1.1)(50) = 33h_p t_p \quad (11\text{-}1)$$

$$\text{ASTM A992 shear strength} > h_p t_p (0.6R_yF_{yp}) = h_p t_p (0.6)(1.1)(345) = 228h_p t_p \quad (11\text{-}1\text{ M})$$

where

F_{yp} = specified minimum yield stress of end-plate material, ksi (MPa)

R_y = ratio of expected yield stress to the specified minimum yield stress, F_y, as specified in AISC *Seismic Provisions* Table A3.1

h_p = height of plate, in. (mm)

t_p = thickness of plate, in. (mm)

$$\text{E70 design strength} = \phi 0.6(70\text{ ksi})t_w h_p = 31.5t_w h_p \quad (11\text{-}2)$$

$$\text{E48 design strength} = \phi 0.6(480\text{ MPa})t_w h_p = 216t_w h_p \quad (11\text{-}2\text{M})$$

where

t_w = thickness of weld, in. (mm)

ϕ = phi factor as defined in AISC *Specification* Section J2.4

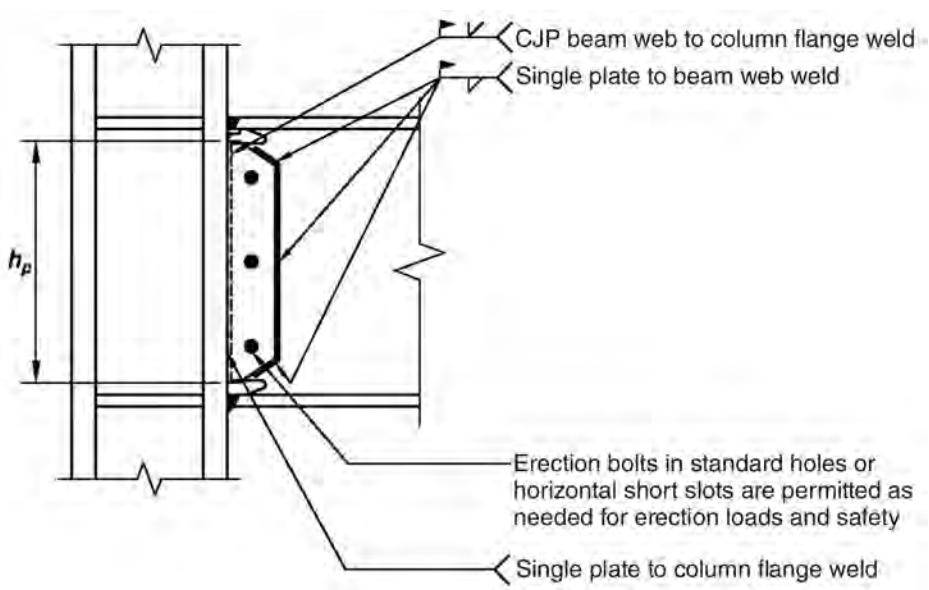

Fig. 11-12. WUF-W moment connection.

If welds are made full length, then $t_w = 1.05t_p$, meaning that the weld must develop the full strength of the shear connection plate.

Several weld combinations may be used to make the shear connection to the column, each with advantages and limitations. Three viable options are presented in the following sections; the third option is generally preferred.

Double-sided CJP groove welds can be used as illustrated in Figure 11-14. The weld on the side of the connection plate that will receive the beam web must be flush, either in the as deposited condition or by grinding afterwards. The compatibility of the shop-produced groove weld and the field-welded beam-to-column connection must be checked (see Section 11.5.5 of this Guide). If this is called a CJP groove weld, NDT requirements would apply.

Two possibilities exist for PJP/fillet weld combinations. The first involves a PJP groove weld on the side of the connection plate opposite of the side that will receive the beam web and a fillet weld on the side that will receive the beam web, as shown in Figure 11-15. To eliminate interference when the beam web is fit to the connection plate, the fillet weld on the side of the connection plate that will receive the beam web should be kept small, typically 3⁄16 in. (5 mm). This is to address the same issue that is associated with the RBS connection detail (see Section 11.8.1 of this Guide).

Heavier connection plates may require larger fillet welds to satisfy the requirements of AISC *Specification* Table J2.4, in which case the root opening for the field made beam-to-column web weld may need to be adjusted. Potential intermix issues must be investigated. When the field-produced groove weld is complete, the shop-made fillet weld will be in the inspection region—defects in the shop-made fillet weld may cause rejection of the field-made groove weld.

Because the small fillet will have limited capacity, the PJP groove weld will be fairly large. For the PJP option, the single-plate shear connection thickness must be sufficient to permit a PJP of adequate size to be deposited, including consideration of the root fusion effects stipulated in AISC *Specification* Table J2.1, and with a sufficient remaining root face dimension to preclude melt-through; a minimum of 1⁄8 in. (3 mm) should be allowed to account for melt-through.

The second fillet/PJP option places the welds in the opposite positions as shown in Figure 11-16. This option is generally the preferred option. A 5⁄16-in. (8 mm) fillet weld is placed on the connection plate opposite of the side that will receive the beam web, the weld size having been selected based upon the largest single-pass weld that can be made in a single pass in the horizontal position. The PJP on the opposite side is adjusted to obtain a connection of requisite

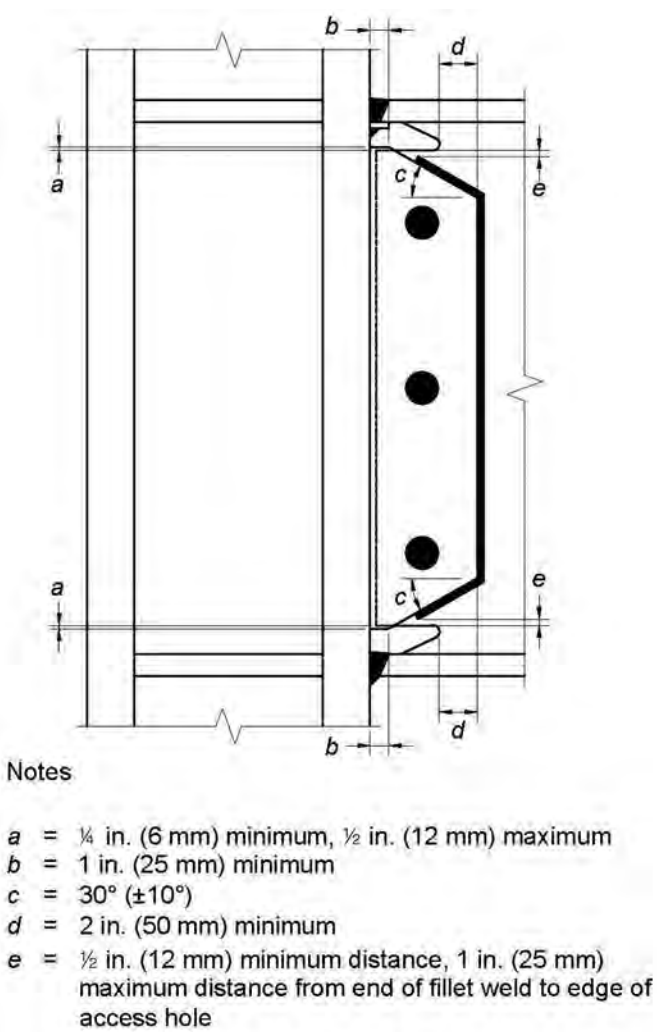

Fig. 11-13. WUF-W shear-plate connection.

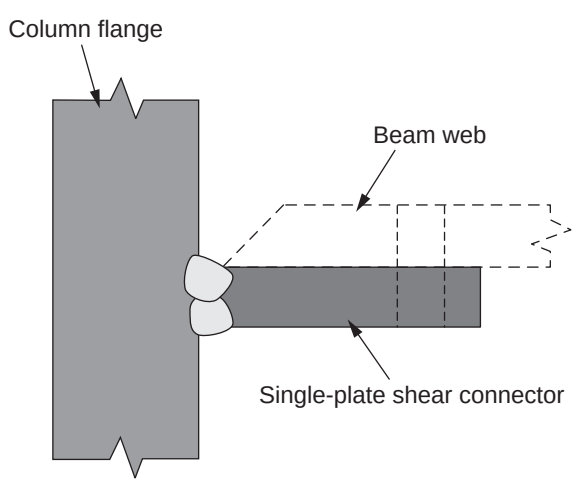

Fig. 11-14. WUF-W double-sided CJP groove weld option for the single-plate shear connection.

strength. The face of the PJP groove weld will either need to be made flush (which is unlikely, given the likely horizontal welding position), or the face can be ground flush. Potential intermix concerns need to be investigated.

A final option will be discussed, primarily to discourage its use. It is possible to join the single-plate shear connection with a large single-sided fillet, as shown in Figure 11-17. To develop the required strength, the fillet weld leg size will need to be $1.5t_p$, and angular distortion will be a challenge. This option has one feature that offers benefits—the beam web side of the connection plate is left free and clear of all welds, eliminating field fit-up concern, intermix issues, and potential NDT interaction problems between the field- and shop-produced welds. The use of the single-fillet option is discouraged in AISC *Prequalified Connections* Commentary Section 8.6.

Beam Web-to-Column Flange Weld

The CJP groove weld of the beam web-to-column flange is a field weld that will be made in the vertical position using the single-plate shear connector as backing. AISC *Prequalified Connections* Section 8.6(5) specifies that the weld be made full length and is demand critical. Section 8.6(5) further stipulates that weld tabs are not required at the ends of the welds, but if used, they must be removed. The welds are permitted to be cascaded at the ends, and the ends are not subject to inspection.

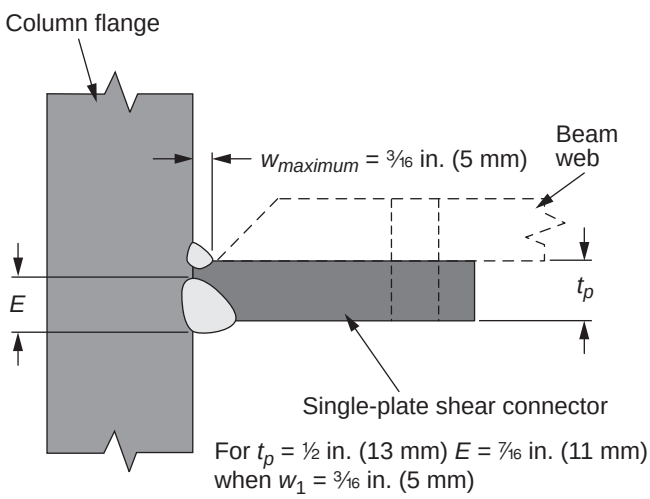

Fig. 11-15. WUF-W fillet and PJP option (nonpreferred).

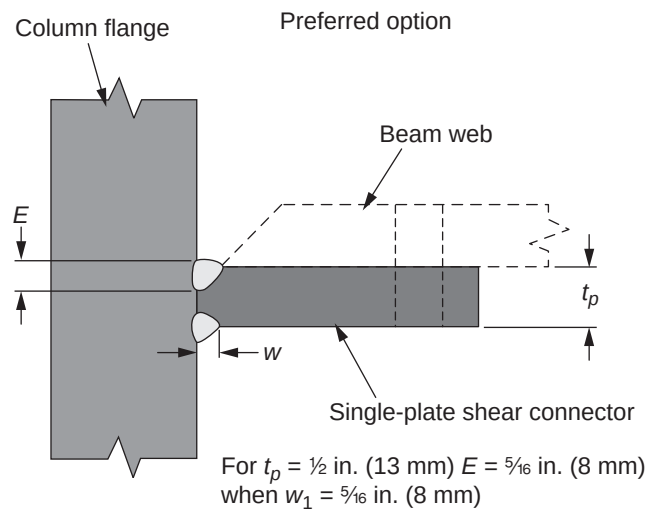

Fig. 11-16. WUF-W fillet and PJP option (preferred).

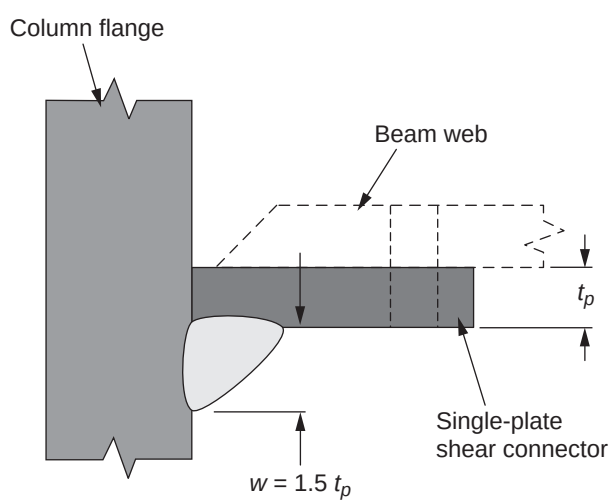

Fig. 11-17. WUF-W single-sided fillet option (nonpreferred).

Connection Plate-to-Beam Web Connection

Fillet welds are used to connect the connection plate to the beam web. AISC *Prequalified Connections* Section 8.6(3) requires the fillet welds to have a leg size equal to the connection plate thickness, minus 1⁄16 in. (2 mm). The field-made fillet weld is primarily oriented vertically, but approximately 3 in. (75 mm) of the weld will be deposited in an inclined overhead position, with another length along an inclined horizontal plane. For connection plates thicker than 3⁄8 in. (10 mm), the horizontal and overhead welds will need to be made in multiple passes. Welders making these welds will need to be qualified to make vertical and overhead welds, and the WPS must be suitable for use in all positions.

Because field welding is required on both sides of the beam web, provisions must be made for welding to be performed on the outside of perimeter framing.

11.8.5 Kaiser Bolted Bracket Moment Connection

The Kaiser bolted bracket (KBB) moment connection is a patented connection system covered in AISC *Prequalified Connections* Chapter 9 that uses a cast steel (not cast iron) bracket that is either welded or bolted to a beam flange and bolted to a column flange as shown in Figure 11-18. The welded option is called the W-series and is discussed in this section.

Requirements for the castings used for the KBB bracket are summarized in AISC *Prequalified Connections* Appendix A, addressing topics such as grade (strength), quality control (including mechanical and NDT), and documentation. Weldability is not discussed in the Appendix. Welding to steel castings is discussed in Section 5.4.8 of this Guide; those principles are applicable when welding the cast steel bracket to the beam flange for the KBB connection.

A fillet weld is used to join the casting to the beam flange. AISC *Prequalified Connections* Section 9.6(1) specifies that

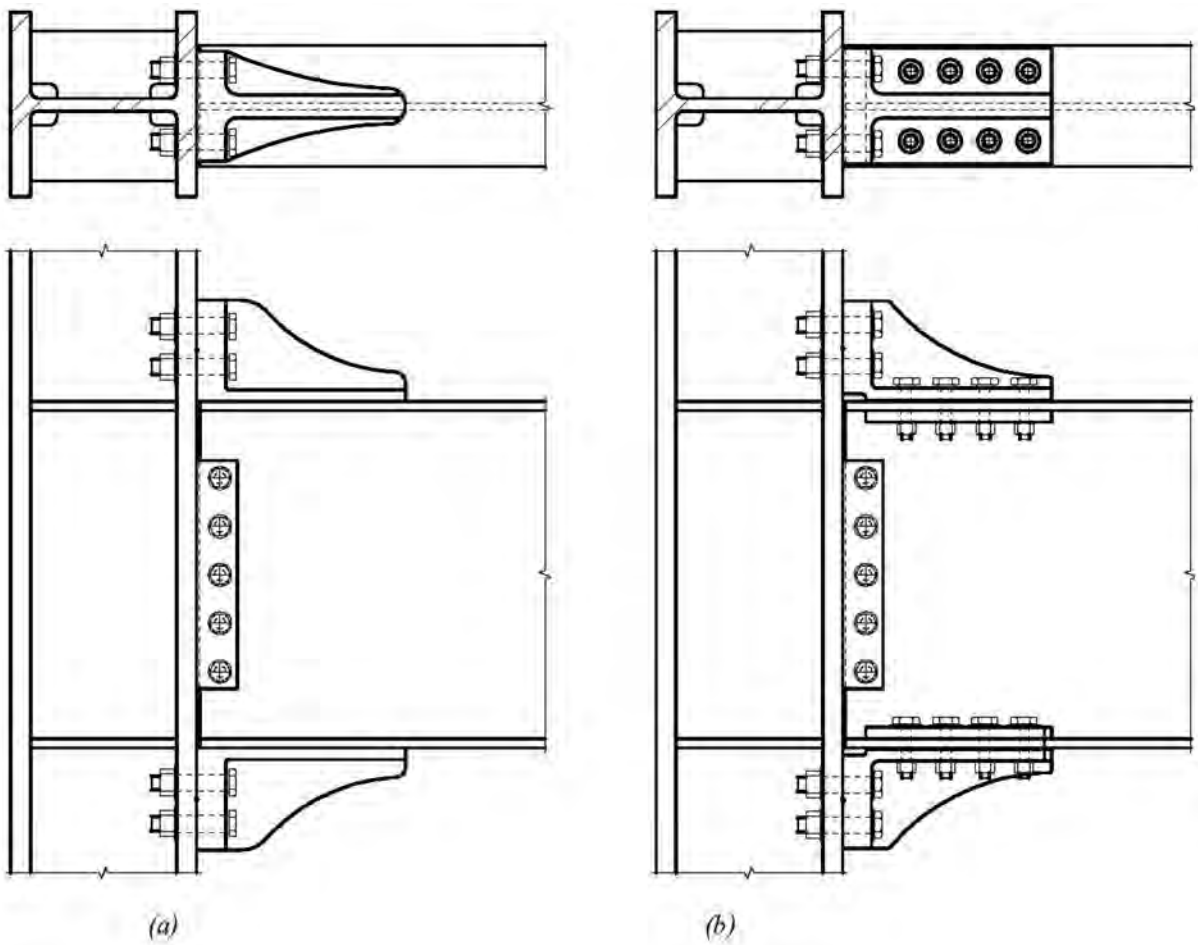

Fig. 11-18. KBB moment connection.

the welds are to be continuous around the tip, with no starts or stops within 2 in. (50 mm) of the bracket tip, presumably to preclude start/stop discontinuities in this region. WPS for welding to castings must be qualified by test.

The prequalified details require a bolted beam web-to-column flange connection; a welded connection at this location is not prequalified according to AISC *Prequalified Connections* Commentary Section 9.7. AISC *Prequalified Connections* Section 9.7(2) allows the single-plate shear connection to be welded to the column flange.

11.8.6 The ConXtech® ConXL™ Moment Connection

The ConXtech® ConXL™ moment connection is a patented prequalified moment connection covered in AISC *Prequalified Connections* Chapter 10 that utilizes a patented manufacturing and fabrication system, involving forgings that are robotically welded to rolled beam sections as shown in Figure 11-19. The forging that is welded to the end of the beam becomes part of a collar assembly that is field bolted around a tubular column.

The use of steel forgings precludes the use of prequalified WPS and forgings must be selected with consideration given to weldability issues. Welding to forgings is covered in Section 5.4.9 of this Guide; those principles are applicable when welding the steel forging to the beam for the ConXtech ConXL moment connection.

Welding details associated with the ConXtech ConXL moment connection must be carefully considered; many of the details employed in the system are not prequalified. Weld access holes are not allowed as stipulated by AISC *Prequalified Connections* Section 10.6(1). Various welding details were considered in the development of the patented system; more information on the system and the welding considerations can be obtained from the patent holder.

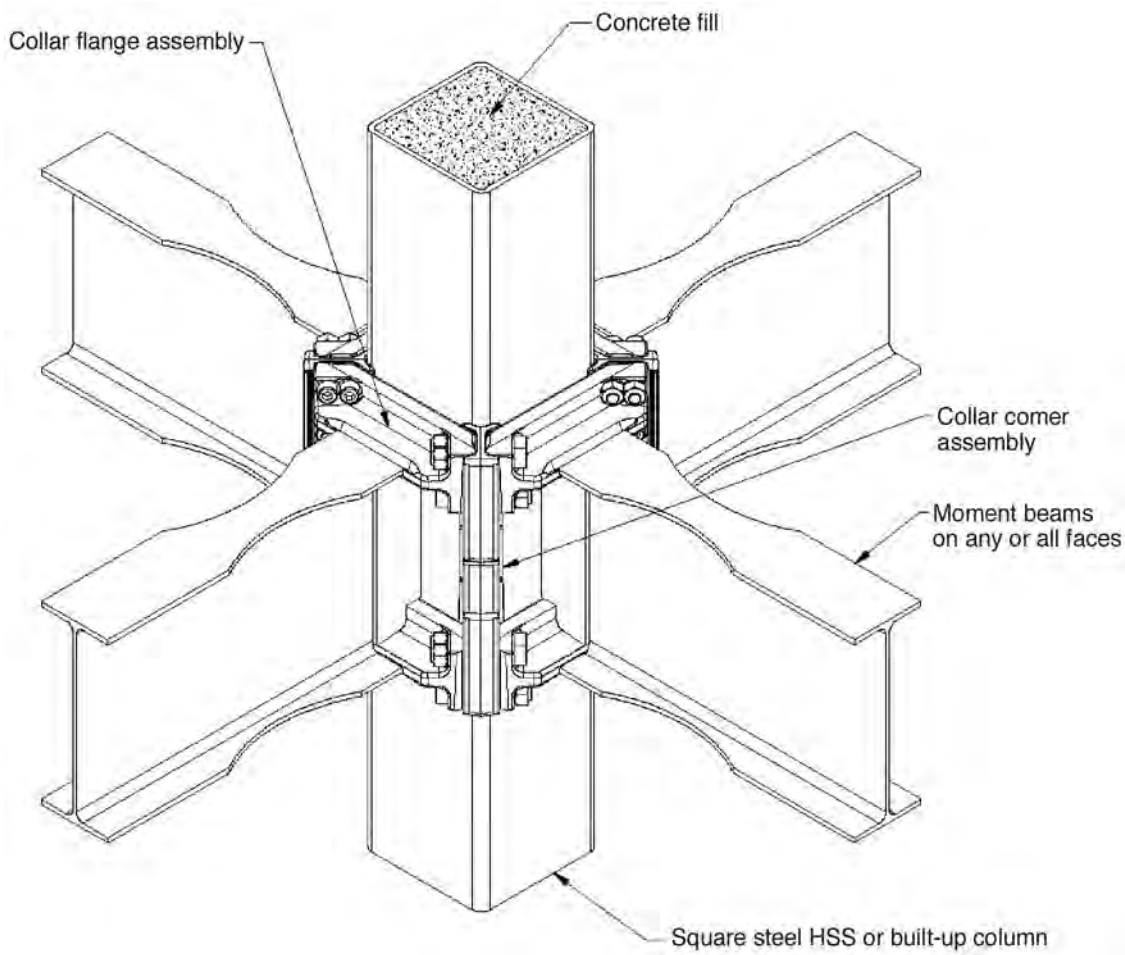

Fig. 11-19. ConXtech® ConXL® moment connection.

11.8.7 The SidePlate® Moment Connection

The SidePlate® moment connection is a prequalified, patented moment connection covered in AISC *Prequalified Connections* Chapter 11 that relies on a pair of steel plates applied to the sides of a column, with a series of interconnection plates between the beam and the steel plates as shown in Figure 11–20. The connection relies on fillet welds to transfer the loads between the various steel pieces. The connection eliminates the conditions of triaxial constraint associated with most beam-to-column connections.

Various welds in the SidePlate moment connection are identified as demand critical in AISC *Prequalified Connections* Section 11.5 and require the use of filler metals that meet these requirements. This conservative approach is taken as explained in AISC *Prequalified Connections* Commentary Section 11.5, despite the fact that in early successful qualification tests the system used filler metals that had no specified minimum CVN requirements.

Detailed requirements and procedures for the various welded joints are contained within the AISC *Prequalified Connections* and the associated Commentary. From a fabrication perspective, there are some fit-up tolerances and assembly sequences that must be considered, and the coordination of tolerances for field erection is essential. The patent holder has additional welding information in this regard.

11.8.8 Simpson Strong-Tie® Strong Frame® Moment Connection

The Simpson Strong-Tie® Strong Frame® moment connection is a prequalified, patented, partially restrained connection covered in AISC *Prequalified Connections* Chapter 12 that uses a modified single-plate shear connection for shear transfer and a modified T-stub connection for moment

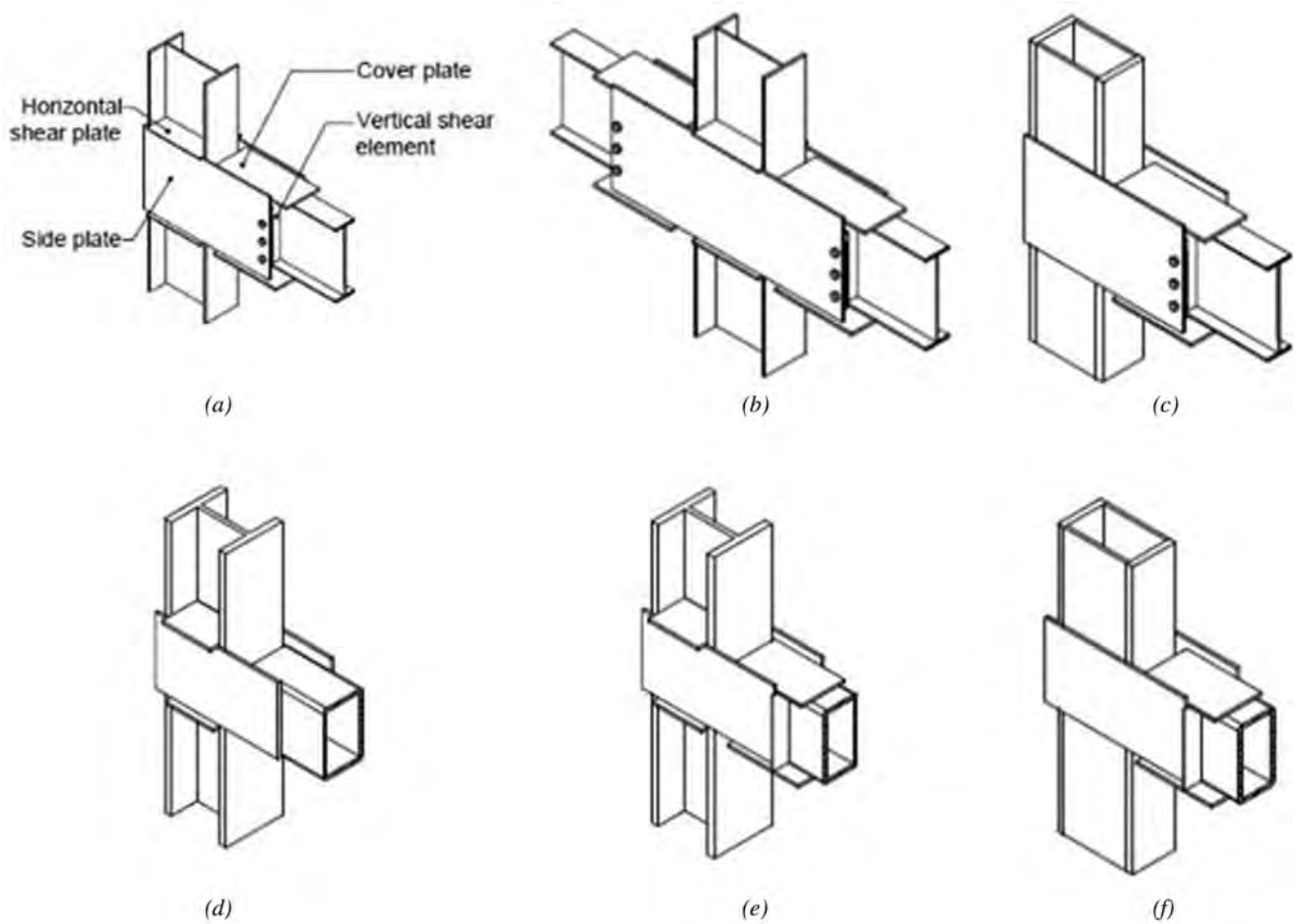

Fig. 11-20. SidePlate® moment connection configurations.

transfer. The connection is illustrated in Figure 11-21. A reduced section in the T-stub allows for controlled, localized yielding. The system relies on field-bolted connections and may be used for wood structures.

The T-stub connection is called the Yield-Link™ structural fuse, and this component contains a welded connection. Either CJP groove welds or fillet welds may be used; both are deemed demand critical in AISC *Prequalified Connections* Section 12.6. The reduced section of the T-stub may be cut by laser, plasma or water-jet methods as specified in AISC *Prequalified Connections* Section 12.7. Single-plate shear connection welds must develop the capacity of the shear plate, with $\frac{5}{8}t_p$ being the minimum size for a double-sided fillet weld.

The Simpson Strong-Tie Strong Frame moment connection allows for a bolt-on/bolt-off replacement system in the event of a damaging earthquake with the components manufactured by Simpson Strong-Tie. Accordingly, welding details are not discussed in detail in this Guide.

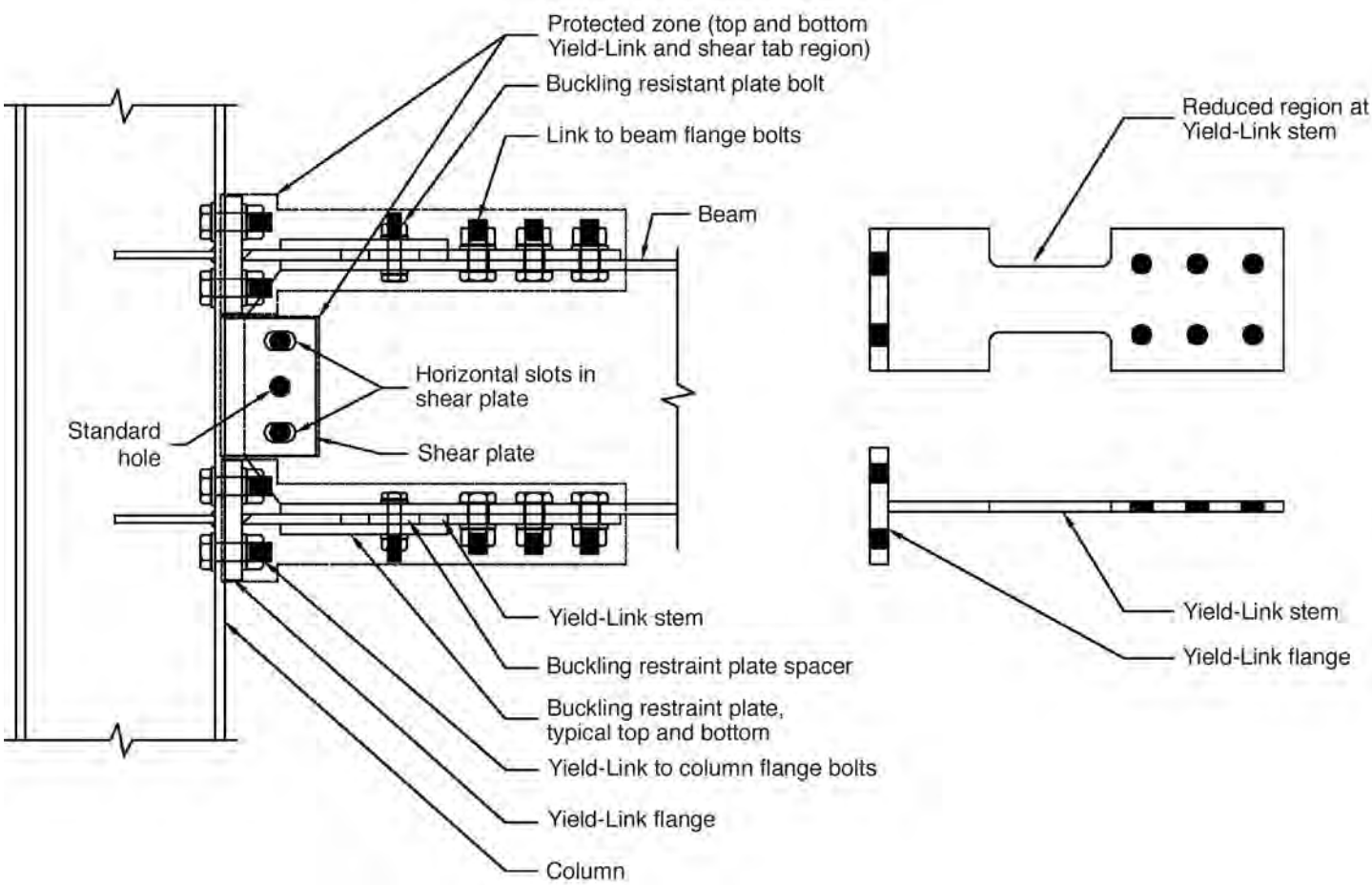

Fig. 11-21. Simpson Strong-Tie Strong Frame moment connection.

Welded HSS supporting a staircase in a Lower Manhattan engineering firm, New York.

Chapter 12
Fatigue Considerations

12.1 INTRODUCTION

"Fatigue is the process of cumulative damage…that is caused by repeated fluctuating loads…Fatigue damage of components subjected to normally elastic stress fluctuations occurs at regions of stress (strain) raisers where the localized stress exceeds the yield stress of the material" (Barsom and Rolfe, 1999).

Most buildings and building components are not subject to cyclic loading that would generate fatigue concerns. The AISC *Specification* requires the fatigue resistance of members consisting of shapes or plate be determined when the number of cycles of application of live load exceeds 20,000. While earthquake loading is cyclic, such loading consists of a relatively limited number of high-stress-range cycles. High-stress-range, low-cycle fatigue (regardless of how it occurs, whether due to seismic load or otherwise) is distinctively different than the fatigue discussed in this chapter, which deals with low-stress-range, high-cycle applications. Thus, fatigue applications for traditional building structures are typically limited to situations such as crane runways and their supports and supports for machinery such as punch presses that impose cyclic loads.

A variety of design methodologies have been used to design structures subject to cyclic loading. The method most commonly applied to structures, and that which has been incorporated into the AISC *Specification*, originated with the American Association of State Highway Transportation Officials (AASHTO) and was developed for bridge design. This method is empirically based and relies on laboratory fatigue testing that was performed on welded connections. The tested assemblies ranged in size from relatively small laboratory specimens to full-scale assemblies that replicated bridge girders. This method is the topic of discussion for this chapter.

When buildings or building components are expected to be subjected to 20,000 or more cycles of live load, fatigue should be considered. Fatigue provisions are contained in AISC *Specification* Appendix 3 (AISC, 2016d). The three key variables involved in the design of members subject to such loading are (1) stress range, (2) connection geometry, and (3) the number of load cycles. As the function of the structure and its life expectancy will dictate the number of load cycles the product is expected to resist, the engineer must address the first two of these variables, which are discussed in Sections 12.2 and 12.3 of this Guide.

12.2 STRESS RANGE

The most important variable used in predicting the life of a specific welded component of a given geometry subject to cyclic loading is the stress range. The stress range is defined as the difference between the maximum stress and the minimum stress. Such stresses may result from applied tension, compression, bending or torsion, and the stresses are computed in the same manner as in the case of static loads. For applications involving cyclic loading, the stresses are first calculated with the dead load only. Next, the stresses due to the live (cyclic) loads are determined. Finally, the stresses for the two loading conditions are combined.

The stress range, not the maximum stress, is the best predictor of fatigue behavior for a welded assembly of a given geometry. As will be shown, the applied stress may be compressive or tensile, and the fatigue behavior of the welded component will be the same, provided that the stress range is the same. Fatigue crack initiation behavior is the same for compressive loading as it is for tensile loading because of the residual tensile stresses that are inherent to as-welded assemblies. In and around the weld, there are residual tensile stresses that may be near the yield stress of the material.

To illustrate, assume a 50-ksi (345 MPa) yield strength steel is used. After welding, yield-level residual tensile stresses will be assumed. Two loading conditions will be considered. In the first, a cyclic tensile load from 0 to 10 ksi (0 to 70 MPa) is applied. In and around the weld, the cyclic load of 10 ksi (70 MPa) is added to the local assumed residual stress of 50 ksi (345 MPa), for a total of 60 ksi (410 MPa). However, with a yield strength of 50 ksi (345 MPa), the 10-ksi (70 MPa) cyclic load causes some localized yielding. When the load is removed, some localized reduction in residual stress will be experienced, resulting in an assumed 40-ksi (280 MPa) residual stress. When the cyclic load is reapplied, the stress (applied and residual) increases to 50 ksi (345 MPa) again. Thus, the cyclic loads cause a localized stress that ranges from 40 ksi (280 MPa) to 50 ksi (345 MPa) and back to 40 ksi (280 MPa).

For the second loading sequence, a compressive stress of 10 ksi (70 MPa) is applied. Beginning with the assumed residual stress of 50 ksi (345 MPa), the cyclic compressive stress lowers this value to 40 ksi (280 MPa). When the cyclic compressive stress is removed, the 50-ksi (345 MPa) residual stress returns. Thus, with cyclic compressive stresses, the load cycle creates stresses of 50 ksi (345 MPa) to 40 ksi (280 MPa) to 50 ksi (345 MPa). With the application of

hundreds of load cycles, the net effect of the two loading conditions is the same. Notice that in both loading examples, the stress range is the same, 10 ksi (70 MPa).

Figure 12-1 is an illustrative applied stress versus time plot of the total stresses on a cyclically loaded structure. These stresses are the result of dead loads and live loads. The stress range, F_{SR}, is the difference between the maximum stress, F_{MAX}, and the minimum stress, F_{MIN}, and is mathematically expressed as follows:

$$F_{SR} = F_{MAX} - F_{MIN} \tag{12-1}$$

Four conditions will be used to illustrate the concept of stress range. In each case, the welded assembly consists of a symmetrical steel beam with flanges that contain complete-joint-penetration (CJP) groove welds, as shown in Figure 12-2. The first two conditions will consider a bare beam, shown in Figure 12-2(a); the latter two conditions will consider a beam with a noncomposite concrete slab, as shown in Figure 12-2(b).

For the first example, consider the beam shown in Figure 12-2(a). Initially, no load is applied to the beam. Assuming the mass of the beam results in negligible stresses, the stress across the welded connections in both top and bottom flanges is zero. Next, a vertical load is applied to the beam, resulting in tensile forces across the bottom-flange weld. The vertical load is a live load, one that comes and goes with time. The graph in Figure 12-2(c) shows the changes in tensile stresses as a result of the application and removal of the live load. The stresses vary from zero to a maximum level, assumed to be 15 ksi (105 MPa) in this example. The stress range (i.e., the maximum stress minus the minimum stress) is therefore 15 ksi – 0 ksi or 15 ksi (105 MPa – 0 MPa or 105 MPa).

For the second example, the top-flange weld will be considered. Under the same loading conditions, the top flange experiences compression. With a symmetrical beam, the stresses across the CJP groove weld range from zero to a compressive stress of 15 ksi (105 MPa), or more precisely, –15 ksi (–105 MPa), as shown in Figure 12-2(d). The stress range is therefore 0 ksi – (–15 ksi) = 15 ksi [0 MPa – (–105 MPa) = 105 MPa]. Notice that the stress range in the second example is identical to the stress range in the first example.

For Examples 3 and 4, the same beam that was used in the first two examples is used again, except now a concrete slab (noncomposite) has been added as shown in Figure 12-2(b). This creates a constant load (i.e., a dead load), and the bottom-flange weld experiences a constant stress of +5 ksi (+35 MPa) (i.e., tension). The top-flange weld experiences a constant stress of –5 ksi (–35 MPa) (i.e., compression).

The third example involves the bottom-flange weld. The same vertical live load used in the previous examples is applied. Due to the mass of the concrete slab, there is already 5 ksi (35 MPa) of tension in the flange. With the addition of the vertical load, the total tensile stress in the bottom-flange weld is 20 ksi (140 MPa). The stress range is therefore 20 ksi – 5 ksi = 15 ksi (140 MPa – 35 MPa = 105 MPa) as is shown in Figure 12-2(e). Again, the stress range is the same as the two previous cases.

Finally, for the fourth example, consider the top flange of the beam shown in Figure 12-2(b). The mass of the concrete slab results in a compressive stress in the top flange weld which is –5 ksi (–35 MPa). When the live load is applied, the compressive stress is increased to a total of –20 ksi (–140 MPa) as seen in Figure 12-2(f). The stress range is therefore –5 ksi – (–20 ksi) = 15 ksi [–35 MPa – (–140 MPa) = 105 MPa]. Again, the stress range is the same as the previous cases.

These four examples, each with different stress states, all experienced the same stress range [i.e., 15 ksi (100 MPa)]. The stress ranges are the same because the cyclic load (i.e., the live load) was the same. And, because the welded flanges in the beam used the same fatigue category detail, the corresponding fatigue life is predicted to be the same for all four connections. This is true, despite the fact that loading conditions varied significantly: zero to tension (Example 1), zero to compression (Example 2), tension to tension (Example 3), and compression to compression (Example 4). The

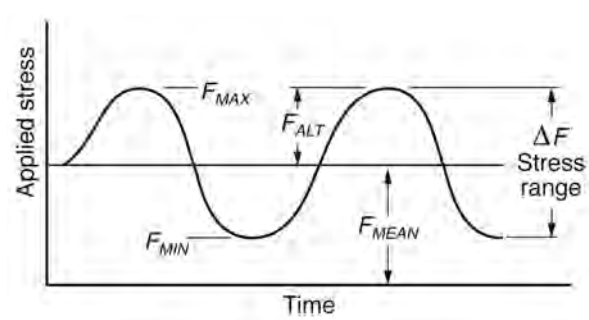

Fig. 12-1. Applied stress versus time.

same behavior would be expected in all four examples, even though the maximum stress, mean stress, minimum stress, and stress ratio (i.e., minimum stress divided by the maximum stress) are all different. For welded assemblies, stress range is the best predictor of the fatigue performance of a given welded detail.

To reduce the stress range, two options are available—reduce the live load or increase the sectional properties that resist the loads. Note that increasing the steel strength will not help; if no change is made other than using a higher-strength steel, the stress range will not change. Testing of welded assemblies made of steels with yield strengths ranging from 36 ksi (250 MPa) to 100 ksi (690 MPa) have demonstrated that for welded connections, the base metal yield strength is not a significant variable for predicting fatigue life. Higher-strength steel will provide an increased ability to carry dead loads but does not increase the live load capability.

Ironically, using higher-strength steel often increases the problems of fatigue; smaller members can be used when higher strength steels are specified. These smaller members, however, will result in increased stresses and increased stress ranges. With the increase in stress ranges, a design with the higher-strength steel (and smaller members) will have a reduced life expectancy. Thus, given that under most situations loads cannot be reduced, the only design option is to increase the material available to resist the loads.

One advantage of the AISC method is that stresses and stress ranges are based on nominal elastic stresses, and there is no need to determine the stress concentration associated with the various connection geometries. The effect of the stress concentration is implicitly incorporated into the permitted stress ranges.

12.3 CONNECTION GEOMETRY

The second of the three key variables involved in design of members subject to cyclic loading is the geometry of the connection. The principal influence of the geometry lies in the nature and extent of the stress raiser that is created. Abrupt, sharp changes create significant stress raisers, whereas smooth, flowing changes do not. Geometric factors that must be considered include the type of weld (whether CJP, PJP, fillet or plug/slot), the orientation of the weld to the applied load (parallel versus transverse), the length of the weld (continuous versus intermittent), the length of the attachment, the treatment of the weld reinforcement (whether left-in-place or ground flush), and the quality of the weld.

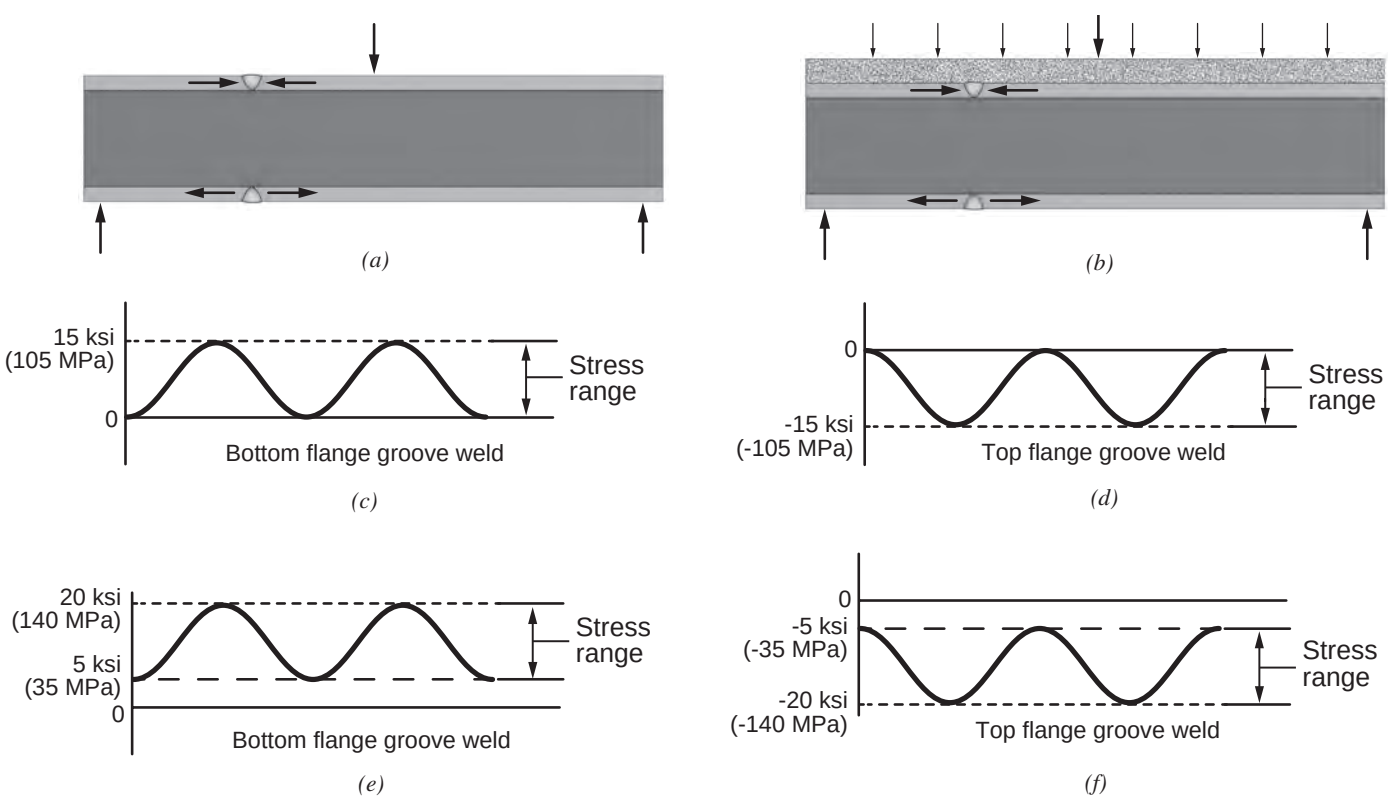

Fig. 12-2. Examples of stress range: (a) bare steel beam; (b) noncomposite concrete slab on steel beam; (c) bare steel beam; (d) bare steel beam; (e) noncomposite concrete slab on steel beam; (f) noncomposite concrete slab on steel beam.

This lengthy list of variables and the myriad combinations that might exist may seem daunting, but fortunately, all these factors have been distilled into nine categories (plus two subcategories) into which the various combinations can be placed. For example, the longitudinal fillet weld joining the web to the flange of a plate girder has essentially the same fatigue behavior as the transverse CJP groove weld that makes a flange splice on the same girder, providing the reinforcement on the groove weld has been removed and that the weld is nondestructively inspected to ensure internal soundness.

The various categories of details have been assigned alphabetical designations, from A to G. Categories B and E both have primed subsets, B′ and E′. Category C has two subsets: C′ and C″. Category G is associated with threaded rods, not welded connections, and will not be discussed further in this Guide. Also, mechanically fastened connections (bolts, rivets and pins) are addressed in Appendix 3, but will not be discussed. Category A details have the highest permissible stress range for a given number of cycles, or for a given stress range will predict the longest life. Category B details have a reduced permissible stress range as compared to Category A.

Figure 12-3 is a plot of the stress range, F_{SR}, versus the number of loading cycles, N, for the various categories of details. The graph is a log-log plot, so minor changes in the stress range can have a major effect on the cycle life associated with a given detail. With the exception of Category F (to be discussed), all the curves are parallel to each other, allowing for the use of a similar equation to compute the design stress range. Moving from Category A to E′, the permissible stress ranges progressively decrease for a given number of cycles of loading.

The curves shown in Figure 12-3 are based upon the previously mentioned fatigue testing of welded assemblies. The curves do not reflect the mean or average values obtained from testing but are rather the lower boundary curve associated with two standard deviations (i.e., 2σ) from mean. The $\pm 2\sigma$ boundaries capture 95% of the data. By using the lower boundary curve as the design curve, 97.5% of the data would theoretically be above this curve.

Associated with each detail is a threshold value, represented by the horizontal portion of the curves shown in Figure 12-3. If applied stress ranges are held at or below this value, infinite life is expected from the structure. For Category A details, the threshold behavior is experienced after approximately 2 million cycles, while Category B details achieve this behavior at approximately 3 million cycles and Category E′ details at about 20 million cycles. Category A details have a threshold value of 24 ksi (170 MPa), while Category B details have a reduced value of 16 ksi (110 MPa), and Category E′ details have the lowest value of 2.6 ksi (18 MPa).

Category A includes all base metal away from welds and geometric changes (such as holes, copes, and weld access holes) but does not include unpainted weathering steels. Category A includes flame-cut steel, providing the edges have a surface roughness value of 1,000 microinches (25 mm) or less, and providing there are no reentrant corners. No welded connection details are classified as Category A, and the cracking of concern with Category A details is in the base metal.

Category B includes both base metal details as well as some welded connection details. Base metal details include flame-cut copes and reentrant corners, as well as drilled or reamed holes in base metal. The cut edges associated with unpainted weathering steel is also placed in Category B. Welded details characterized by Category B include continuous longitudinal fillet welds and continuous longitudinal two-sided CJP groove welds. Also included is the weld detail associated with transverse CJP groove welds in butt joints with the weld reinforcement and backing (if used) removed and inspected to ensure internal soundness; in this case, both the weld metal and the surrounding base metal are incorporated into Category B. Category B welded connection details can be generally characterized as those that have no geometric stress concentration (e.g., transverse CJP groove welds in butt joints with the weld reinforcement and backing removed) or have a geometric stress concentration that is parallel to the direction of stress (e.g., longitudinal fillet welds). Category B does not address shear loading on the throat of the fillet weld; shear on the weld throat is governed by Category F. The Category B designation governs the performance of the base metal and weld metal due to longitudinal loading where fatigue cracks typically initiate from weld metal porosity. Because Category B details contain no geometric stress concentrations, fatigue cracking could occur in either the base metal or the weld metal.

Category B′ was a category that was added after the initial groupings were established and includes details that have allowable stress ranges between those associated with Category B and C. Only a few details are included in Category B′. Welded connections that contain longitudinal PJP groove welds and longitudinal CJP groove welds made with continuous, left in place steel backing are placed in Category B′. Shear on a partial-joint-penetration (PJP) groove weld throat is governed by Category F. The uncertainty associated with the consistency of the root of the PJP groove welds justifies the reduced stress range capability of the Category B′ detail as compared to Category B.

Category C details include geometric features associated with unwelded steel, as well as welded connection details. In the latter grouping are reentrant corners made with prescribed radii dimensions and holes. Welded connections include the base metal at the toes of transverse groove welds where reinforcement has been left in place, as well as the

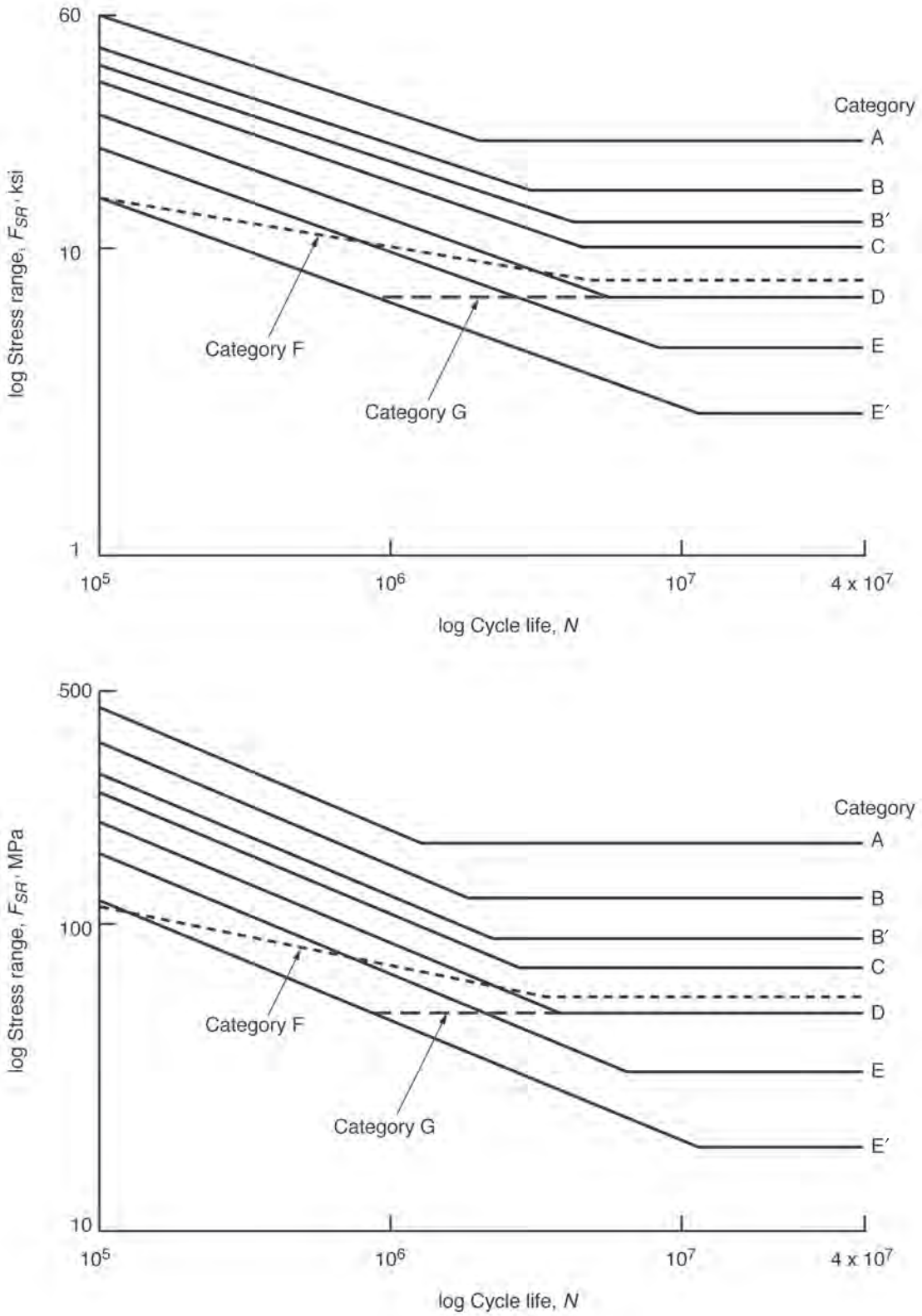

Fig. 12-3. Stress range versus cycle life.

base metal at toes of transverse fillet welds. The base metal surrounding a welded stud is included in Category C. Category C also includes the base metal associated with various attachments. Longitudinal attachments less than 2 in. (50 mm) long in the direction of loading are grouped into Category C, as are transverse attachments with relatively large transitional radii. Category C details all include stress concentrations that are perpendicular to the stress field, but the effect of the stress concentration is limited either because the localized stress amplification is small or the stress concentration is minor. For example, consider a transverse CJP groove weld with reinforcement left in place; little or no stress flows through the reinforcement, and thus the effect of the stress concentration at the toe is minor. Or consider a short attachment with a length of less than 2 in. (50 mm) in the direction of stress; the attachment will attract little stress, and therefore, the termination of the attaching weld, while a stress concentration by itself, is of little consequence because the stress flow in and out of the attachment is small. The cracking of concern that is associated with Category C details occurs in the base metal near geometric features or at the weld toe. Categories C′ and C″ are specialized subsets of Category C and will be separately discussed in sections to follow.

Category D details have stress range capabilities and threshold values between those associated with Category C and E details, and correspondingly, have stress concentrations that are more significant than those associated with Category C but not as severe as the Category E details. Transverse attachments may be classified as Category C, D or E, depending on the size of the radius used. The cracking of concern associated with Category D details is in the base metal at geometric features that serve as stress concentrators.

Categories E and E′ details have the lowest allowable stress range capability and the lowest threshold value. Included in Categories E and E′ are details where the geometry of the connection and the required flow of stresses through the connection create significant stress concentrations. Category E details include the stress raiser created at the end of longitudinal welds and the stress raiser that exists around plug and slot welds. Welds at the ends of cover plates are Category E or E′, depending on specific connection details. The cracking of concern associated with Category E and E′ details is in the base metal. Because these details often limit the performance capability of welded assemblies, it is often desirable to redesign connections to eliminate the need for these details with limited fatigue capability.

Category F addresses the fatigue performance of weld metal loaded in shear. The welds of interest include fillet welds, PJP groove welds, plug welds, or slot welds. The failure of concern with Category F details is in the weld itself, not in the surrounding base metal. Cyclically loaded welded connections that include these types of welds typically fail with cracks that initiate either at the weld toe, weld root, or the weld termination, in which case other categories apply. Category F governs the relatively few situations where the failure is due to shear loading on the weld throat.

Category F has a different slope as can be seen in Figure 12-3; while all the other fatigue details have a 1 in 3 slope, Category F has a 1 in 6 slope. For conditions where the number of loading cycles is less than approximately 100,000 cycles, Category F has the lowest allowable stress range of all the listed details. For infinite life, the threshold value for Category F lies between that for Category C and D. Regardless of the number of cycles, Category F details always have a stress range capability less than what is permitted for Category C.

Initially, the stress range capability of Category F details may be perceived as a major design restriction. However, the stress range on the throats of the affected welds can nearly always be reduced by making larger welds. For example, if the fatigue life of a ¼-in. (6 mm) fillet weld is inadequate for the stress range applied, an increase in size to 5⁄16 in. (8 mm) will result in a life increase of 3.8 times; a change from a 6 mm fillet weld to an 8 mm fillet weld increases fatigue life 5.6 times. These examples demonstrate that a small increase in weld size, along with the corresponding small decrease in the stress range, can result in a significant increase in the expected life of a Category F detail, due to the aforementioned 1 in 6 slope. Small changes in the stress range have more of an effect on the performance of Category F details than is the case for the other categories of details because of the different slopes.

It is also noteworthy that while a larger fillet weld will reduce the stress range on the weld throat, and thus may address the issue of the Category F stress range, a larger fillet weld will do nothing to improve the fatigue performance of a transverse fillet that is Category C. In the case of the latter, stresses in the base metal, not on the weld throat, must be reduced to improve fatigue life.

The difference in the slope of the Category F curve as compared to the others is due in part to the more homogeneous nature of the base metal; any fatigue cracks that initiate continue in material that is nominally identical. Weld metal, in contrast, is more heterogeneous, typically composed of multiple passes with as-deposited and refined weld metal. Additionally, welds will likely include small, acceptable inclusions. When fatigue cracks initiate in the weld metal, they propagate through the various metallurgical structures at different rates depending on the microscopic local properties. Furthermore, when the cracks intersect inclusions, they tend to arrest momentarily. After enough load cycles, the crack will reinitiate and continue. The other factor affecting the Category F curve is the difference between tensile failures—which are generally represented by all the other categories—and shear failures associated with Category F.

The net effect is a difference in slope of the Category F curve as compared to the others.

Category G does not include any welded connection details and is outside the scope of this Guide. AISC *Specification* Appendix 3 also includes details that govern the fatigue performance of mechanically fastened connections; discussion of those topics is also outside the scope of this Guide.

There are two special subsets of Category C known as Category C′ and C″ that involve transverse welds in T-, cruciform and corner joints. Applicable joints are shown in Figure 12-4. Depending on the relative size of the weld as compared to the base metal thickness, t_p, fatigue failure may initiate either at the weld toe or from the root of the weld. Several types of welds may be applied to these joints including CJP groove welds, PJP groove welds, fillet welds, or combinations of CJP and PJP groove welds with fillet welds.

When transverse CJP groove welds are used in T-, corner and cruciform joints, with or without contouring fillet welds, fatigue crack initiation would be expected at the weld toe. These welds are simple Category C details, as have been previously discussed.

When transverse PJP groove welds are used in T-, corner and cruciform joints, with or without reinforcing fillet welds, fatigue crack initiation may occur at either the weld toe or from the weld root, depending on the relative size of the weld and the base metal thickness. This condition is known as Category C′. If cracking is expected from the root, the Category C stress range must be reduced by means of a reduction factor, R_{PJP}, calculated from the following:

$$R_{PJP} = \frac{0.65 - 0.59\left(\frac{2a}{t_p}\right) + 0.72\left(\frac{w}{t_p}\right)}{t_p^{0.167}} \leq 1.0$$

(*Spec*. Eq. A-3-4)

$$R_{PJP} = \frac{1.12 - 1.01\left(\frac{2a}{t_p}\right) + 1.24\left(\frac{w}{t_p}\right)}{t_p^{0.167}} \leq 1.0$$

(*Spec*. Eq. A-3-4M)

where

$2a$ = length of the nonwelded root face in the direction of the thickness of the tension-loaded plate, in. (mm)

t_p = thickness of tension-loaded plate, in. (mm)

w = leg size of the reinforcing or contouring fillet, if any, in the direction of the thickness of the tension-loaded plate, in. (mm)

When PJP groove welds are used, with or without reinforcing fillets, and when $R_{PJP} \leq 1.0$, then failure would be expected from the weld root. The use of these reduction factors is discussed in Section 12.4 of this Guide.

When failure is expected from the weld root (i.e., when controlled by Category C′), no threshold value is provided in Appendix 3. With enough cycles of sufficient stress range, failure will occur. However, failure from the weld root can be overcome by a weld of a sufficient size; if $R_{PJP} > 1.0$, then

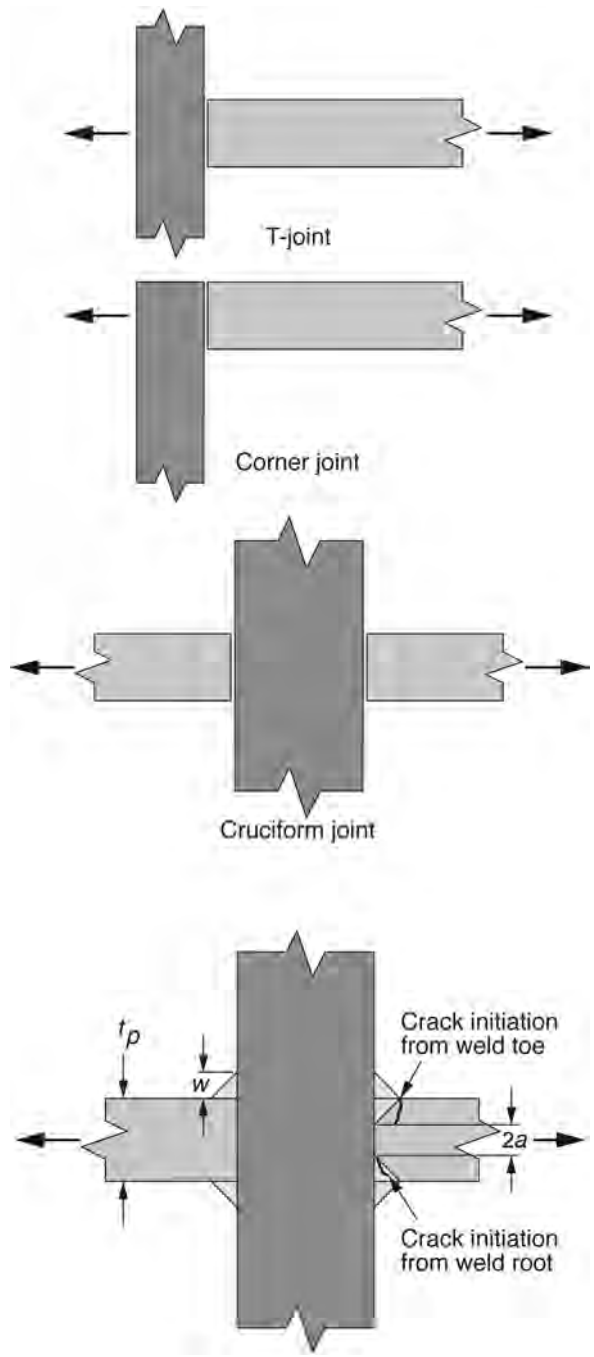

Fig. 12-4. Special Category C details: T-, corner and cruciform joints.

the behavior moves from Category C′ (root failure) to Category C (toe failure), and Category C has a threshold value (i.e., will experience infinite life if the stress range is low enough).

A review of the reduction equation shows that there are two variables that can increase the computed value to 1.0: $2a$ can be made smaller, and w can be made larger. Decreasing $2a$ involves making the PJP groove weld larger, and increasing w requires that the fillet weld leg size be increased. With two variables, theoretically there are an infinite number of combinations that can result in $R_{PJP} > 1.0$.

The reduction equation may be used for PJP groove welds with or without reinforcing fillet welds. For the specific case where only PJP groove welds are used (i.e., without fillet welds), $w = 0$ and the relationship shown in *Specification* Equation A-3-4 and *Specification* Equation A-3-4M can be simplified as follows:

$$R_{PJP\ only} = \frac{0.65 - 0.59\left(\dfrac{2a}{t_p}\right)}{t_p^{0.167}} \leq 1.0 \qquad (12\text{-}2)$$

$$R_{PJP\ only} = \frac{1.12 - 1.01\left(\dfrac{2a}{t_p}\right)}{t_p^{0.167}} \leq 1.0 \qquad (12\text{-}2\text{M})$$

Notice that if PJP groove welds are used alone, the reduction factor will always be less than 1.0. To gain better fatigue performance, PJP groove welds can be changed to CJP groove welds, or reinforcing fillet welds of sufficient size can be added to the PJP groove welds to obtain Category C behavior. However, welded connections that use PJP groove welds alone always require the use of the reduction factor and will never benefit from a threshold limit.

When only transverse fillet welds are used in T-, corner or cruciform joints, fatigue crack initiation may occur at either the weld toe or from the weld root, depending on the relative size of the weld and the base metal thickness. This condition is known as Category C″. If cracking is expected from the root, the stress range of Category C must be reduced by a reduction factor, R_{FIL}, as follows:

$$R_{FIL} = \frac{0.06 + 0.72\left(\dfrac{w}{t_p}\right)}{t_p^{0.167}} \leq 1.0$$

(*Spec*. Eq. A-3-6)

$$R_{FIL} = \frac{0.103 + 1.24\left(\dfrac{w}{t_p}\right)}{t_p^{0.167}} \leq 1.0$$

(*Spec*. Eq. A-3-6M)

The reduction factor can never exceed 1.0, although it is mathematically possible for this to occur when very large fillet welds are used. In that case, cracking at the weld toe will control, and no reduction factor is needed.

A review of AISC *Specification* Equation A-3-4/A3-4-M and *Specification* Equation A-3-6/A3-6-M shows that they are the same when applied to fillet welds. For fillet-weld-only situations, the distance $2a$ between the weld roots is equal to t_p, and thus $2a/t_p$ is equal to 1, and the more general equation is simplified to the fillet-weld-only equation.

Like Category C′, Category C″ has no threshold value. However, Category C″ can be converted to Category C by making fillet welds of a sufficient size. The resultant fillet weld sizes, however, are large: For t_p = ½ in. (13 mm), the fillet leg, w, must equal 0.58 in. (15 mm), and for t_p = 1 in. (25 mm), fillet leg, w, must equal 1.3 in. (33 mm). These are unusually large fillets, and it is usually more economical to use a PJP/fillet weld combination when converting Category C″ to Category C.

Depending on the values in *Specification* Equation A-3-4/A3-4M and *Specification* Equation A-3-6/3-6M, the allowable stress range will vary. Thus, curves for Category C′ and C″ cannot be plotted on Figure 12-3. However, if values for the plate thickness, t_p, the unwelded root face, $2a$, and the weld leg size, w, are assumed, values for the stress range for C′ or C″ could be added to Figure 12-3; the values would only be applicable for the assumed combination of t_p, $2a$ and w. Importantly, unlike all the other curves shown in Figure 12-3, the C′ and C″ plots would be continuously declining lines with no threshold values.

Categories A through E′ all involve the nominal stresses in the base metal, not the stresses in the weld itself. The reason is simple—fatigue cracking typically occurs in the base metal. Category F is used to control shear stresses in the weld metal.

The previously supplied descriptions of the various categories of details is illustrative, not exhaustive. AISC *Specification* Appendix 3 contains descriptions and illustrations of dozens of details. Part of this Appendix is shown in Figure 12-5. It is a fairly simple procedure to review the various examples and to identify a situation the same as, or similar to, the structural detail of interest. From the tables, the stress category can be obtained, as well as a constant, C_f, and a threshold value, F_{TH}, which are discussed in the next Section.

12.4 COMPUTATIONS

The basic equation for determining the maximum design stress range, F_{SR}, assumes the form of the following:

$$F_{SR} = 1{,}000\left(\frac{C_f}{n_{SR}}\right)^{0.333} \geq F_{TH}$$

(*Spec*. Eq. A-3-1)

TABLE A-3.1 (continued)
Fatigue Design Parameters

Description	Stress Category	Constant C_f	Threshold F_{TH}, ksi (MPa)	Potential Crack Initiation Point
SECTION 3—WELDED JOINTS JOINING COMPONENTS OF BUILT-UP MEMBERS				
3.1 Base metal and weld metal in members without attachments built up of plates or shapes connected by continuous longitudinal CJP groove welds, back gouged and welded from second side, or by continuous fillet welds	B	12	16 (110)	From surface or internal discontinuities in weld
3.2 Base metal and weld metal in members without attachments built up of plates or shapes, connected by continuous longitudinal CJP groove welds with left-in-place continuous steel backing, or by continuous PJP groove welds	B'	6.1	12 (83)	From surface or internal discontinuities in weld
3.3 Base metal at the ends of longitudinal welds that terminate at weld access holes in connected built-up members, as well as weld toes of fillet welds that wrap around ends of weld access holes				From the weld termination into the web or flange
Access hole $R \geq 1$ in. (25 mm) with radius, R, formed by predrilling, sub-punching and reaming, or thermally cut and ground to bright metal surface	D	2.2	7 (48)	
Access hole $R \geq 3/8$ in. (10 mm) and the radius, R, need not be ground to a bright metal surface	E'	0.39	2.6 (18)	
3.4 Base metal at ends of longitudinal intermittent fillet weld segments	E	1.1	4.5 (31)	In connected material at start and stop locations of any weld
3.5 Base metal at ends of partial length welded coverplates narrower than the flange having square or tapered ends, with or without welds across the ends				In flange at toe of end weld (if present) or in flange at termination of longitudinal weld
$t_f \leq 0.8$ in. (20 mm)	E	1.1	4.5 (31)	
$t_f > 0.8$ in. (20 mm)	E'	0.39	2.6 (18)	
where t_f = thickness of member flange, in. (mm)				

Specification for Structural Steel Buildings, July 7, 2016
AMERICAN INSTITUTE OF STEEL CONSTRUCTION

TABLE A-3.1 (continued)
Fatigue Design Parameters

Illustrative Typical Examples

SECTION 3—WELDED JOINTS JOINING COMPONENTS OF BUILT-UP MEMBERS

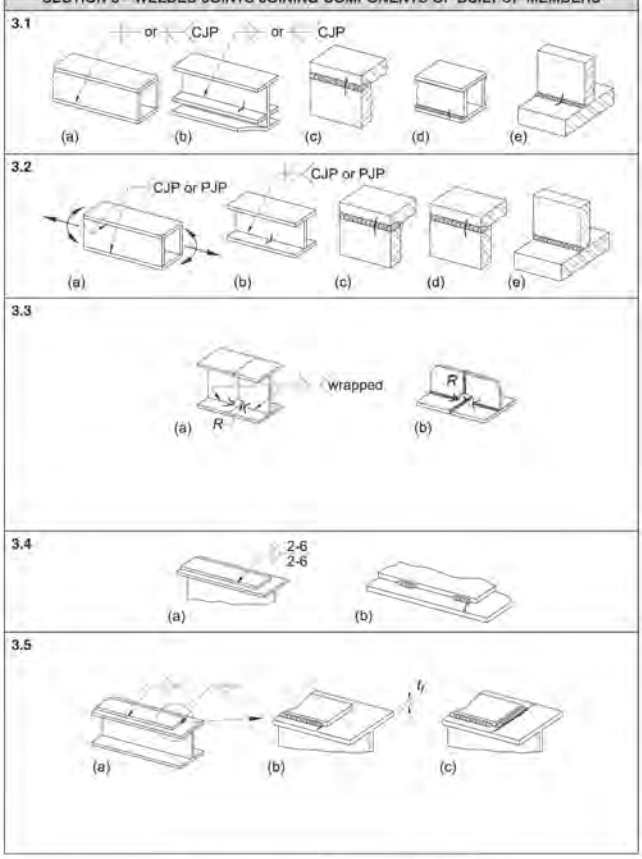

Specification for Structural Steel Buildings, July 7, 2016
AMERICAN INSTITUTE OF STEEL CONSTRUCTION

Fig. 12-5. AISC Specification *Table A-3.1 example.*

$$F_{SR} = 6900\left(\frac{C_f}{n_{SR}}\right)^{0.333} \geq F_{TH}$$

(*Spec*. Eq. A-3-1M)

where

C_f = constant for the fatigue category

F_{SR} = allowable stress range, ksi (MPa)

F_{TH} = threshold allowable stress range, maximum stress range for indefinite design life, ksi (MPa)

n_{sr} = number of stress range fluctuations in design life (e.g., number of cycles)

The coefficient C_f and stress range F_{TH} can be obtained from AISC *Specification* Table A-3.1. The number of stress range fluctuations can be determined from the life expectancy of the structure multiplied by the frequency of loading. For indefinite life, the design stress range, F_{SR}, must be held below the threshold fatigue stress range, F_{TH}.

For Category F, *Specification* Equations A-3-1 and A-3-1M assume a slightly different format, as follows:

$$F_{SR} = 100\left(\frac{1.5}{n_{SR}}\right)^{0.167} \geq 8 \text{ ksi}$$

(*Spec*. Eq. A-3-2)

$$F_{SR} = 690\left(\frac{1.5}{n_{SR}}\right)^{0.167} \geq 55 \text{ MPa}$$

(*Spec*. Eq. A-3-2M)

The exponent reflects the difference in the slope of the curve for Category F material as can be seen in Figure 12-3.

For Category C′, where root cracking is expected from the roots of a pair of PJP groove welds, with or without reinforcing fillet welds, the stress range must be reduced by the previously discussed reduction factor, R_{PJP}, and the following relationship is used:

$$F_{SR} = 1{,}000 R_{PJP}\left(\frac{4.4}{n_{SR}}\right)^{0.333}$$

(*Spec*. Eq. A-3-3)

$$F_{SR} = 6900 R_{PJP}\left(\frac{4.4}{n_{SR}}\right)^{0.333}$$

(*Spec*. Eq. A-3-3M)

The 4.4 factor is simply the coefficient, C_f, for Category C. Notice the lack of a threshold value.

For Category C″, where root cracking is expected from the roots of a pair of fillet welds, the stress range must be reduced by the previously discussed reduction factor, R_{FIL}, and the following relationship is used:

$$F_{SR} = 1{,}000 R_{FIL}\left(\frac{4.4}{n_{SR}}\right)^{0.333}$$

(*Spec*. Eq. A-3-5)

$$F_{SR} = 6900 R_{FIL}\left(\frac{4.4}{n_{SR}}\right)^{0.333}$$

(*Spec*. Eq. A-3-5M)

As was the case for Category C′ the 4.4 factor is simply the coefficient, C_f, for Category C and again, there is no threshold value for this situation.

If the number of cycles of application of live load is less than 20,000, and the maximum permitted stress due to peak cyclic loads is $0.66F_y$, no evaluation of fatigue resistance is required according to AISC *Specification* Appendix Section 3.1. A limited number of loading cycles to the limited peak stress level is not expected to create fatigue concerns. Fatigue failures can occur at fewer than 20,000 cycles, and in some cases, failure can occur in fewer than a dozen cycles. However, such fatigue failures are typically associated with global (i.e., not localized) stresses that exceed the material yield strength (i.e., the peak stress exceeds the limit of $0.66F_y$).

If the stress range is less than the threshold value for the connection detail, no further evaluation of fatigue resistance is required; under such conditions, fatigue failure is not expected to occur. Category C′ and C″ details do not have threshold values, and therefore this approach cannot be used for such details.

12.5 INSPECTION ISSUES

The stress ranges for the various categories of details were experimentally determined from welded assemblies that included acceptable fabrication discontinuities but were free from defects (i.e., unacceptable discontinuities). In the situation of CJP groove welds transverse to the direction of stress, the welds are required to be inspected by ultrasonic testing (UT) or radiographic testing (RT) to ensure internal soundness. AISC *Specification* Appendix 3, Section 3.6, stipulates that this applies whether the weld reinforcement is removed (Category B) or left in place (Category C).

12.6 SPECIAL FABRICATION AND ERECTION REQUIREMENTS

Special fabrication and erection requirements apply to members subject to cyclic loading, see AISC *Specification* Appendix 3, Section 3.5, for a complete list of requirements. Included are the following:

- Longitudinal steel backing is permitted to remain in place, provided it is continuous for the length of the joint. Any splices in the backing are required to be

joined with CJP groove welds, with reinforcement removed. Such splicing is required to take place prior to assembly in the joint.

- If tack welds are used to hold longitudinal backing in place, the tack welds are required to be continuous.
- Reinforcing or contouring fillet welds are required on top for PJP or CJP groove welds in T- and corner joints. The AISC *Specification* requires this to be no less than ¼ in. (6 mm), while AWS D1.1 defines the minimum size as $T_1/4$, where T_1 is the thickness of the member in which the groove weld is placed, but the weld need not exceed ⅜ in. (10 mm).
- Weld tabs are required on transverse groove welds in regions of tensile stress. After the weld has been completed and cooled, weld tabs are required to be removed.
- End returns are required when loading is normal to the outstanding legs of angles or on the outer edge of end plates. End returns are to be no less than two times the weld size.
- Reentrant corners at cuts, copes and weld access holes are required to have prescribed minimum radius dimensions. A minimum radius of ⅜ in. (10 mm) is always required, and better fatigue performance is obtained for some details when the minimum radius is 1 in. (25 mm).

In addition to the fabrication/erection details mentioned in AISC *Specification* Appendix 3, it is prudent to make certain that the effects of miscellaneous attachments, including erection aids that are not removed, be considered as they can create unintended load paths or may introduce fatigue details with limited stress range capability. Discontinuous longitudinal backing and intermittent tack welds attaching backing are common problems.

12.7 LIMITATIONS TO THE APPENDIX 3 METHODOLOGY

The model presented in AISC *Specification* Appendix 3 is based on tests conducted on fabricated assemblies that were subject to stress ranges below the yield strength of the steel. Deviations from the conditions tested may render the model invalid for other applications. Limitations from AISC *Specification* Appendix 3, Section 3.1, include the following conditions:

- The peak cyclic loads are not permitted to exceed $0.66F_y$. When peak cyclic stresses exceed F_y (i.e., when the steel is permitted to yield), the low stress range/high cycle life model of Appendix 3 no longer applies. Rather, when F_y is exceeded, failure may occur in thousands or even dozens of cycles. Appendix 3 does not deal with this condition, and thus the limitation that peak stresses not exceed $0.66F_y$.
- Suitable corrosion protection has been supplied, or the steel is subject only to mildly corrosive atmospheres, such as normal atmospheric conditions. When fatigue conditions are combined with corrosion conditions, predicting life expectancy is much more difficult. Corrosion-fatigue-crack propagation behavior is a very complex phenomenon and is dependent on many variables that are not part of the Appendix 3 model, including frequency, waveform and stress ratio (Barsom and Rolfe, 1999). Fortunately, for most structural applications, the assumption of only mildly corrosive applications is valid.
- The temperature of the structure does not exceed 300°F (150°C). As the temperature of the steel increases, the modulus of elasticity decreases, resulting in an increased fatigue crack growth rate. The slight decrease in modulus at 300°F (150°C) does not necessitate any change in the model that was based on testing at ambient temperatures. For higher temperature applications, the allowable stress ranges of Appendix 3 can be reduced by the ratio of elevated temperature modulus to the room temperature modulus. Higher temperature applications may additionally introduce corrosion problems, in which case additional factors must be considered. Very high temperature operations may additionally introduce concerns about creep, which is not addressed in the AISC *Specification.*

In addition to the limitations that are listed in Appendix 3, a frequently asked question involves the suitability of this model for predicting fatigue life under conditions of low temperature. The model is equally suitable for low-temperature applications; fatigue crack growth rates are the same at low temperatures as at room temperature. However, because of fracture concerns, the onset of brittle fracture occurs sooner at low temperatures. Because of the reduced fracture toughness of steel at low temperatures, the critical crack size, a_{cr}, that would prompt brittle fracture is smaller at low temperatures. Accordingly, while fatigue crack growth rates at low temperatures are not different, the a_{cr} threshold will be reached sooner when cyclic loading occurs at low temperatures (see Section 13.7 of this Guide).

Field welding of a column splice using FCAW-S (photo courtesy of The Lincoln Electric Company).

Chapter 13
Fracture-Resistant Welded Connections

13.1 INTRODUCTION

There are many limit states of concern to the structural engineer, including strength, stability, buckling, deflection and others. Fracture is another such limit state that must be consider. Fracture is a particularly undesirable limit state because it usually occurs without warning, at a very high rate of speed, and often results in complete failure of the member (Barsom and Rolfe, 1999).

For most building applications, the limit state of fracture is not a principal concern because it is not typically the controlling limit state. There are many reasons why this is the case: The steel in most buildings in service is relatively warm, service loads create strain rates that are essentially static, the number of full design stress cycles is typically low, codes limit the severity of stress raisers, buildings normally have significant redundancy, and the typical fracture toughness of steels used in building construction is adequate even when fracture toughness levels are not specified. For these reasons, AISC *Specification* Commentary Section A3 states that "…the probability of fracture in most building structures is low." (AISC, 2016d).

There are notable exceptions to the aforementioned situations, and there are conditions that make fracture a more probable limit state: The service temperature of the steel may be cold, dynamic loads can be applied to structures (e.g., seismic or blast), or the structure may be cyclically loaded (e.g., crane rail supports). Under such conditions, the possibility of fracture increases. For structures with less redundancy, the consequences of fracture become more pronounced. Finally, there are a few notable examples where the fracture toughness of commonly used steels is lower than normal. When such situations are encountered, considering the limit state of fracture is more important.

The science and art of fracture mechanics is a complex field, and entire texts have been written on the topic. This chapter will review the most basic principles of fracture mechanics, with a specific focus on how the principles apply to welded connections. Due to the depth and breadth of fracture mechanics, the following discussion on fracture is not exhaustive. The reader is encouraged to study other references on the subject.

For welded structures, fracture avoidance is particularly important in that welding creates a true one-piece structure, making it possible for a single crack to propagate through an entire structure. Fractures often occur in connections, in part due to geometric changes and more complicated stress states. Welded connections have residual stresses, geometric stress concentrations, and potential quality-related problems that increase fracture concerns. Principles to make welded connections more fracture resistant are presented.

13.2 REVIEW OF FRACTURE MECHANICS

Fracture mechanics compares the driving force, K_I, to the resisting force, K_C, or a similar term. The driving force is calculated and is a function of the applied stress, the geometry of the material, and the nature of the planar discontinuity (or crack) in the material. Fracture resistance is a property of the material and is a measured value. The goal is to make certain that K_C is greater than K_I, which could alternately be stated as being certain that K_I is less than K_C.

It is a common practice for engineers to only consider how to make K_C greater and neglect the possibility of reducing K_I. To focus on making K_C greater inevitably leads to a demand for greater material fracture toughness, and may cause some to think of brittle fracture as only a material (steel) problem. To view fracture control in this manner is to eliminate viable options that will achieve the same goal in other ways. A proper understanding considers the role of all factors contained in this summary, "Fracture mechanics has shown that because of the interrelation among materials, design, fabrication, and loading, brittle fractures cannot be eliminated in structures merely by using materials with improved notch toughness" (Barsom and Rolfe, 1999). The driving force, K_I, and the resistance, K_C, must both be considered to mitigate the potential for fracture.

The driving force is a function of the geometry of the part, including the characteristics of a crack or crack-like planar discontinuity, and stress. The fracture resistance is a function of the material, which in turn is dependent on other factors such as temperature, constraint and loading rate (strain rate), as well as the material.

Mathematically, the basic equation used for fracture mechanics computations takes on the form of the following:

$$K_c \geq \sigma \sqrt{\pi a} \tag{13-1}$$

where

K_c = fracture resistance, ksi $\sqrt{\text{in.}}$ (MPa $\sqrt{\text{mm}}$)

a = length of the crack or the crack-like discontinuity, in. (mm)

σ = stress, ksi (MPa)

Other constants and variables may be required to analyze different geometric configurations, but the evaluation

always involves the material resistance, stress and flaw size. Theoretically, there can be an infinite number of combinations of the three variables that will successfully resist brittle fracture, with a correspondingly infinite number of combinations where brittle fracture will occur.

The concept of a balance among the three factors is very basic, but it is instructive to review some examples. When the stress, σ, is sufficiently low and the crack size is small, then the required fracture toughness level that will resist brittle fracture is correspondingly low. If the crack size increases and if the stresses remain unchanged, the required fracture toughness will need to increase. An alternative approach may be to permit the same crack size increase but to keep the driving force low by reducing the stress levels. The engineer's task is to establish an optimized combination of the three variables that is practical, commercially feasible and economical.

Although fracture resistance may exceed the fracture potential and thereby mitigate the risk of brittle fracture, other failure modes still exist. With enough stress, steel will eventually yield and tear, even if brittle fracture is avoided. At some point, flaw sizes become so large that net section limitations will govern the behavior of the cracked specimen, even if the material fracture toughness is so great that brittle fracture does not occur.

When brittle fracture occurs, the failure is proof that the fracture toughness of the steel was inadequate for the applied stress and flaw size. The same event is proof that the applied stresses were too great for the combination of fracture toughness and flaw size. The only conclusion that can be reached from the basic report of a brittle fracture is that the factors that created the demand for fracture exceeded the factors that generated the resistance to fracture.

13.3 SIGNIFICANCE FOR WELDED CONNECTIONS

Brittle fractures are more often associated with connections than with structural members and are often associated with welded connections in particular. There are many reasons fractures more often occur in connections—the stresses in members are often better understood, less complex, and generally oriented in the longitudinal direction of the member, where the best mechanical properties can be measured. Connections involve changes in geometry and multidirectional stresses and may force loads to be transferred through the steel in the transverse or through-thickness direction. Both bolted and welded connections introduce stress concentrations that usually do not exist in the main member such as holes, copes, snipes, and weld access holes. Workmanship discontinuities can be introduced into the connection by shearing, punching, thermal cutting, and other production operations. Bolts can be improperly installed and welds can be improperly deposited.

Welded connections introduce three variables that affect fracture resistance. First, the shrinkage of weld metal from elevated temperatures to room temperature creates residual tensile stresses that may be near the yield point of the material. Secondly, even a properly made weld will often introduce a geometric stress concentration—weld toes, fillet weld terminations, and left-in-place steel backing are examples. Finally, welds may contain imperfections (acceptable discontinuities) as well as defects (unacceptable discontinuities). These variables provide challenges when designing fracture-resistant welded connections, but can be controlled to achieve the desired behavior.

13.4 CRACKS VERSUS PLANAR FLAWS

In the field of fracture mechanics, any planar discontinuity is typically referred to as a crack. From an analytical perspective, it makes no difference whether the planar geometric irregularity is the result of a crack in the weld, a crack in the heat affected zone (HAZ), or a lamination in the steel; all constitute planar separations and are usually referred to as cracks. The planar discontinuity between discontinuous segments of a longitudinal steel backing bar would also be called a crack in the field of fracture mechanics. Incomplete fusion may create a planar discontinuity that would be called a crack in fracture mechanics. To a welding engineer, however, these planar features are distinctively different and would not all be considered cracks.

To illustrate these differences, consider the welded butt joints shown in Figure 13-1. In Figure 13-1(a), the unwelded single-bevel complete-joint-penetration (CJP) groove weld is shown. A properly made CJP is shown in Figure 13-1(b). In Figure 13-1(c), a CJP with incomplete joint penetration is shown. Figure 13-1(d) shows a CJP with a centerline crack in the root. A crack in the HAZ is shown in Figure 13-1(e), and lamellar tearing is illustrated in Figure 13-1(f). The cracks shown in Figure 13-1(c) through 13-1(f) would be considered edge cracks in a fracture mechanics analysis. However, to a welding engineer, only two are actually cracks—examples Figure 13-1(d) and 13-1(e)—and even those are distinctively different. The weld crack shown in Figure 13-1(d) may be a solidification or hot crack, while the HAZ crack in Figure 13-1(e) may be a cold crack, each with unique causes and requiring different corrective measures (see Chapter 6 of this Guide).

To create a fracture-resistant welded connection, all types of planar irregularities that are perpendicular to the stress field should be eliminated or minimized in size, whether they are true cracks or geometric discontinuities that are crack-like in their effect. Thus, the more inclusive terms *planar flaws*, *planar discontinuities* or *planar irregularities* are used in this chapter unless the focus is on true cracks.

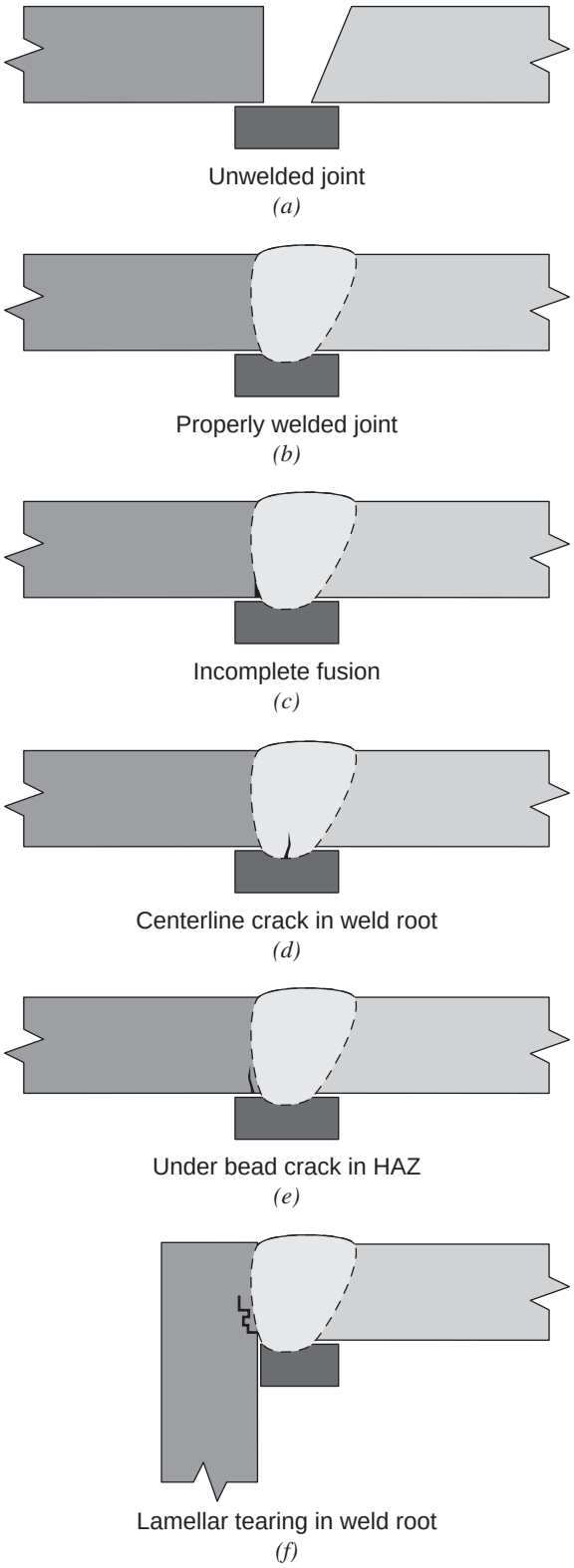

Fig. 13-1. Different planar indications in a welded connection.

13.5 CONTROLLING STRESSES

Reducing the stress on the welded connection is the first fracture variable that will be considered. On the most basic level, this involves limiting loads and specifying cross-sectional areas and section properties that keep stresses to an acceptable level. This is a fundamental premise of design and an inherent part of member design, and stresses should be kept low in the connection as well. For example, welded connections should be placed in regions of low stress when possible and practical. Changes in the connection cross section and stiffness should be gradual. The flow of stress through the connection should be considered, with details selected that provide simple and direct load paths. Eccentricities that result in secondary stresses should be avoided.

In addition to limiting the stress on the welded connection, an effort should be made to avoid amplifying the localized stresses with stress concentrations and stress raisers. Copes, cutouts, snipes, and weld access holes should be made with generous radii, not sharp or square corners. Notches and gouges should be avoided. Contouring fillet welds in T- and corner joints can be used to reduce the stress concentration associated with 90° intersections.

Highly restrained connections should be avoided. Triaxial constraint results in a stress state where there is little or no shear stress, yet shear stresses are essential for ductile behavior.

Although it is not commonly performed on structures, it is possible to increase the fracture resistance of a welded connection by thermal stress relief. Properly applied, this technique will result in an approximate 90% reduction in the residual stress and an increase in the fracture resistance.

13.6 CONTROLLING FLAW SIZE, *a*

The second major approach toward increased fracture resistance is limiting the flaw size, a (i.e., the planar discontinuity). The ideal situation is one in which $a = 0$—that is, no planar discontinuity exists. Practically speaking, all commercial materials will have some imperfections, and welded assemblies will contain flaws. Accordingly, the application of this second approach involves limiting or reducing the size of planar discontinuities. Reducing flaw size involves taking measures to avoid cracking and inspecting parts to confirm that the part is crack-free. If inspection reveals cracks, repair approaches are used to eliminate the flaw. Additionally, controlling flaw size involves the elimination of crack-like planar irregularities that may result from the design or detailing of the welded connections.

Methods by which flaw sizes can be minimized are grouped into five categories, as follows:

- Avoid the introduction of planar discontinuities in design and detailing

- Avoid the introduction of planar discontinuities and stress raisers in fabrication and erection
- Take measures to eliminate cracking and tearing
- Inspect to confirm quality construction and detect unexpected planar discontinuities
- Inspect in-service structures

13.6.1 Design and Detailing

Welded connections should be carefully examined to ensure that even when properly made, the connection is free of planar discontinuities that would create stress raisers. Weld roots are a frequent location of such problems. For example, partial-joint-penetration (PJP) groove welds and fillet welds loaded perpendicular to their longitudinal axis have a naturally occurring lack of fusion plane at the root of the welds.

Single-sided CJP groove welds in T- and corner joints with left-in-place steel backing, when loaded perpendicular to the weld axis, have a stress concentration in the weld root, even when a quality weld is made. Removal of steel backing may be justified in some situations. For longitudinal welds, discontinuous steel backing will create a stress concentration in the weld root when the weld is loaded in tension parallel to the weld axis. Weld tabs allow groove welds to be made with good quality for the length of the weld. Left-in-place weld tabs can create stress raisers, depending on the connection geometry and loading direction. Removal of weld tabs can increase the fracture resistance of such connections. AISC *Specification* Appendix 3 requires the use of weld tabs for cyclically loaded structures and the removal of weld tabs after the weld has cooled; the same requirement is appropriate for fracture-resistant connections.

Properly made double-sided PJP groove welds will contain a naturally occurring incomplete fusion plane between the roots of the two welds. If the connection is loaded in shear or compression, the planar interface will not create a fracture problem. However, when any of the applied loads causes a tensile stress perpendicular to the weld axis, the planar discontinuity will create a stress raiser that may be problematic from a fracture perspective, particularly when dealing with butt joints where reinforcing fillet welds are impossible. The use of a CJP in this location will not only eliminate the planar discontinuity, but will also provide for a larger weld throat size, reducing the stress levels as well.

13.6.2 Stress Raisers in Fabrication and Erection

Construction-related activities can introduce crack-like irregularities and notches that would not be shown on design or construction documents. Erecting lugs, erection aids, and other construction-related attachments that are not needed for structural reasons but are required for construction may introduce unintended load paths or notches. Tack welds outside the weld joint may create problematic notches. The challenge of these construction-related issues is that the problematic details can be added without the knowledge of the engineer and without considering the effect on the fracture resistance of the structure. To avoid this, the engineer and contractor must cooperatively interact.

13.6.3 Cracking and Tearing

The engineer, detailer and contractor all play important roles in preventing fabrication-related cracking. Details of cracking and lamellar tearing, in contrast to notches and planar discontinuities, are discussed in Chapter 6 of this Guide.

13.6.4 Inspection

Weld inspection, whether visual or nondestructive, has never improved the quality of any weld; inspection only identifies the quality that was already present. Each inspection methodology has its limitations, and some weld discontinuities may be missed, regardless of the inspection methodology (see Chapter 10 of this Guide).

The overall topic of the present discussion is the control of the flaw size, a. Dye penetrant testing (PT) and magnetic particle testing (MT) are effective at detecting surface-breaking flaws but incapable of identifying the depth of the discontinuity. However, this lack of capability is typically immaterial because the corrective action usually employed when surface-breaking defects are detected is to repair the defect, regardless of the depth. Shallow grinding will fix some problems, and repair welding can be used to fix more extensive problems. MT and PT are particularly useful tools for examining fracture-sensitive structures in that surface-breaking planar discontinuities of a given size create a greater driving force, K_I, than an embedded flaw of the same size.

Radiographic testing (RT) is effective in detecting certain internal flaws as well as some surface-breaking flaws. However, RT may miss the discontinuities of greatest concern—namely, cracks—depending on the crack orientation and tightness.

Ultrasonic testing (UT) is effective in detecting planar flaws that are perpendicular to the sound path and can be used for flaw sizing. It should be remembered that the traditional AWS D1.1 acceptance criteria is based upon the magnitude of sound reflection, not the size of the flaw, so special flaw sizing techniques must be employed when the flaw size, a, is desired.

Regardless of the NDT method used, it must be remembered that no inspection method will detect everything. While technology is improving and UT in particular is able to detect smaller and smaller flaws, some discontinuities will always escape NDT detection. Accordingly, the a dimension used in the fracture mechanics evaluation is often assumed to be whatever cannot be detected by NDT. For example, if

the inspection technique can detect flaws larger than ⅛ in. (3 mm), then a is assumed to be ⅛ in. (3 mm).

13.6.5 In-Service Inspection

The flaw size, a, may change with time. Cyclic loading will result in crack initiation and crack propagation after enough cycles of a sufficient stress range. The interaction of fracture mechanics and fatigue is covered in Section 13.8 of this Guide. While sustained static loads will not cause cracks to develop with time, major and unexpected loading events such as unusual snow storms, earthquakes, tornados, and blast events may cause tears and cracks to develop in structures that were previously free of such planar discontinuities. Damaged structures with larger a dimensions will have reduced fracture resistance when severely loaded in the future. Loss of section due to corrosion will result in higher localized stresses and probably increased stress concentrations, reducing fracture resistance. For all of these reasons, an appropriate inspection program should be established for fracture sensitive structures. After-the-event inspection of severely loaded structures may be justified to ensure that the fracture resistance of the structure has not been impaired.

13.7 PROVIDING SUITABLE RESISTANCE TO FRACTURE

The final topic for increasing fracture resistance, the material fracture toughness, is discussed last deliberately because this is often the first variable, and sometimes the only variable, that is considered when efforts are taken to increase fracture resistance. The fracture toughness of the material is used to determine the fracture resistance, K_C, whereas the previously discussed factors of stress, σ, and flaw size, a, determine the demand side. The importance of attention to the demand side of the equation is aptly summarized in this statement from AISC *Specification* Commentary Section A3, "Good workmanship and good design details incorporating joint geometry that avoids severe stress concentrations are generally the most effective means of providing fracture-resistant construction."

Most of the specifications for steels that are used in construction in 2017 do not have requirements for specified minimum fracture toughness values; in most cases, Charpy V-notch (CVN) toughness requirements can be specified as supplemental requirements. That does not mean, however, that steels without specified requirements have no fracture toughness values. In some cases, the steels will exhibit significant fracture toughness levels, but the values are simply not reported. Unfortunately, low fracture toughness values in steels have been encountered, and these materials comply with the specifications that have no requirements.

Welded connections are complex, and determining the required level of fracture toughness is difficult. The materials of interest involve the deposited weld metal, the HAZ, and the base metal. Filler metals are available with and without specified minimum levels of CVN toughness (see Chapter 2 of this Guide). The localized fracture toughness of base metals varies across the cross section of various shapes that are used as well as through the thickness of plates. The anisotropic nature of steel results in differences in fracture toughness in the longitudinal, transverse and through-thickness directions. Through-thickness base metal fracture toughness may be significantly less than the fracture toughness measured in the longitudinal direction.

When welds are placed on base metal with the aforementioned variation in fracture toughness properties, HAZ are created with different fracture toughness properties as well. Even within the HAZ, there are various zones with different properties. Multiple-pass welds create overlapping HAZ with even more potential variations in properties. Single-pass welds will have different fracture toughness properties as compared to multiple-pass welds, and multiple-pass welds will have variable properties across their cross sections. Further, the specific toughness values obtained from the same filler metal are dependent on the welding parameters used. In broad terms, the fracture toughness of deposited weld metal depends on how fast the weld cools when it is made. Both extremely fast cooling rates and extremely slow cooling rates are undesirable for weld metal fracture toughness; intermediate cooling rates typically lead to optimized properties. See Section 8.8.9 of this Guide.

Despite all these factors and the associated complexity, relatively simple and yet responsible fracture control plans have been developed, along with specified minimum CVN toughness values for the materials involved. Three examples will be reviewed that serve as a pattern that can be considered for increasing the fracture resistance of similar structures. The first two are time proven, having been used successfully for many years. The final example from seismic design is arguably unproven in terms of actual seismic performance for reasons discussed in that section.

An effective fracture control plan involves more than minimum CVN toughness values; a range of controls on acceptable details, inspection, quality requirements, and other factors are used along with the material fracture toughness requirements to provide fracture resistance. These CVN toughness criteria presented in the following discussion apply to new construction and are expected to be conservative. The listed values, however, should not be taken as lower bound values below which fracture is automatically expected.

Table 13-1. Non-Fracture Critical Tension Component Impact Test Requirements [Adapted from ASTM A709/A709M-09a, Table 8 (ASTM, 2009)]				
		Minimum CVN Test Energy, ft-lb, at Minimum Temperature, °F		
Steel Grade	Thickness, *t*	Zone I	Zone II	Zone III
36T	$t \leq 4$ in.	15 @ 70°F	15 @ 40°F	15 @ 10°F
50T, 50ST, 50WT	$t \leq 2$ in.	15 @ 70°F	15 @ 40°F	15 @ 10°F
	2 in. $< t \leq 4$ in.	20 @ 70°F	20 @ 40°F	20 @ 10°F
HPS 50WT	$t \leq 4$ in.	20 @ 10°F	20 @ 10°F	20 @ 10°F
HPS 70WT	$t \leq 4$ in.	25 @ –10°F	25 @ –10°F	25 @ –10°F
HPS 100WT	$t \leq 2½$ in.	25 @ –30°F	25 @ –30°F	25 @ –30°F
	2½ in. $< t \leq 4$ in.	35 @ –30°F	35 @ –30°F	35 @ –30°F

Table 13-1M. Non-Fracture Critical Tension Component Impact Test Requirements [Adapted from ASTM A709/A709M-09a, Table 8 (ASTM, 2009)]				
		Minimum CVN Test Energy, J, at Minimum Temperature, °C		
Steel Grade	Thickness, *t*	Zone I	Zone II	Zone III
250T	$t \leq 100$ mm	20 @ 21°C	20 @ 4°C	20 @ –12°C
345T, 345ST, 345WT	$t \leq 50$ mm	20 @ 21°C	20 @ 4°C	20 @ –12°C
	50 mm $< t \leq 100$ mm	27 @ 21°C	27 @ 4°C	27 @ –12°C
HPS 345WT	$t \leq 100$ mm	27 @ –12°C	27 @ –12°C	27 @ –12°C
HPS 485WT	$t \leq 100$ mm	34 @ –23°C	34 @ –23°C	34 @ –23°C
HPS 690WT	$t \leq 65$ mm	34 @ –34°C	34 @ –34°C	34 @ –34°C
	65 mm $< t \leq 100$ mm	48 @ –34°C	48 @ –34°C	48 @ –34°C

13.7.1 AASHTO Bridges—Redundant and Fracture Critical

Bridges generally can be categorized as redundant or nonredundant. Redundant bridges have multiple load paths, and the complete failure of any one member would not be expected to result in the collapse of the structure. A five-girder bridge would be an example of a redundant structure. Nonredundant bridges by definition lack such redundancy, therefore the failure of one individual member is expected to result in the collapse of the bridge. A tied arch bridge is an example of a nonredundant structure, where the tension chord is a nonredundant member. These are also known as fracture critical bridges, and such structures are designed more conservatively than redundant bridges, particularly with respect to fracture concerns.

The American Association of State Highway and Transportation Officials (AASHTO) established a fracture control plan (FCP) that was first issued in 1978 to govern the design, fabrication, materials and inspection of nonredundant structures. The allowable fatigue stress range for fracture critical members was limited to 80% of that for redundant members. Acceptable and unacceptable details were specified in the AASHTO design specifications. Fracture critical bridges are subject to in-service inspections on a periodic frequency.

Since 1992, the welding-related fabrication requirements have been incorporated into the AASHTO/AWS D1.5 *Bridge Welding Code* (AWS, 2015a). Weld metal properties, including CVN requirements, are included in AASHTO/AWS D1.5, as are weld inspection requirements.

In terms of materials, the base metal requirements for AASHTO bridges are listed in AASHTO specifications, as well as in ASTM A709 (ASTM, 2016). Tables 13-1 and 13-1M of this Guide summarize base metal CVN toughness requirements for tension members in redundant structures and Tables 13-2 and 13-2M do the same for fracture critical members. Tables 13-3 and 13-3M summarize the CVN toughness requirements for weld metal used for fabrication of redundant and fracture critical bridge members.

A review of the data contained in these tables offers insight into the reasoning behind these criteria. In Table 13-1/13-1M, the CVN testing temperature for A709 Grade 36T (Grade 250T) systematically declines from 70°F (21°C) for Zone I to 40°F (4°C) for Zone II to 10°F (–12°C) for Zone III,

Table 13-2. Fracture Critical Tension Component Impact Test Requirements [Adapted from ASTM A709/A709M-09a, Table 9 (ASTM, 2009)]				
Steel Grade	**Thickness, *t***	**Minimum CVN Test Energy, ft-lb, at Minimum Temperature, °F**		
		Zone I	**Zone II**	**Zone III**
36F	$t \leq 4$ in.	25 @ 70°F	25 @ 40°F	25 @ 10°F
50F, 50SF, 50WF	$t \leq 2$ in.	25 @ 70°F	25 @ 40°F	25 @ 10°F
	2 in. $< t \leq 4$ in.	30 @ 70°F	30 @ 40°F	30 @ 10°F
HPS 50WF	$t \leq 4$ in.	30 @ 10°F	30 @ 10°F	30 @ 10°F
HPS 70WF	$t \leq 4$ in.	35 @ –10°F	35 @ –10°F	35 @ –10°F
HPS 100 WF	$t \leq 2½$ in.	35 @ –30°F	35 @ –30°F	35 @ –30°F
	2½ in. $< t \leq 4$ in.	Not permitted	Not permitted	Not permitted

Table 13-2M. Fracture Critical Tension Component Impact Test Requirements [Adapted from ASTM A709/A709M-09a, Table 9 (ASTM, 2009)]				
Steel Grade	**Thickness, *t***	**Minimum CVN Test Energy, J, at Minimum Temperature, °C**		
		Zone I	**Zone II**	**Zone III**
250F	$t \leq 100$ mm	34 @ 21°C	34 @ 4°C	34 @ –12°C
345F, 345SF, 345WF	$t \leq 50$ mm	34 @ 21°C	34 @ 4°C	34 @ –12°C
	50 mm $< t \leq 100$ mm	41 @ 21°C	41 @ 4°C	41 @ –12°C
HPS 345WF	$t \leq 100$ mm	41 @ –12°C	41 @ –12°C	41 @ –12°C
HPS 485WF	$t \leq 100$ mm	48 @ –23°C	48 @ –23°C	48 @ –23°C
HPS 690 WF	$t \leq 65$ mm	48 @ –34°C	48 @ –34°C	48 @ –34°C
	65 mm $< t \leq 100$ mm	Not permitted	Not permitted	Not permitted

reflecting the more demanding (lower temperature) service conditions expected to be seen in Zones II and III. However, regardless of the temperature zone in which the structure is located, the CVN testing temperature is higher than what will be experienced in these zones. The dynamic strain rates associated with CVN testing are higher than the strain rates experienced by the actual structure and, therefore, are more demanding. The temperature shift principle permits the CVN testing of materials at warmer temperatures than those to which the structure will be exposed. The temperature shift is dependent on the yield strength of the material and can be found from this equation:

$$T_{shift} = 215 - 1.5F_y \qquad (13\text{-}2)$$

$$T_{shift} = 120 - 0.12F_y \qquad (13\text{-}2\text{M})$$

where

F_y = yield strength of the material, ksi (MPa)

T_{shift} = full temperature shift, °F (°C)

The equation is valid for steels from 36 ksi to 140 ksi (250 MPa to 970 MPa).

The full temperature shift reflects the difference in material behavior from static loading to dynamic loading. Most structures are loaded between these extremes, and three-fourths of the total temperature shift is typically used for steel bridges (Barsom and Rolfe, 1999).

Referring again to Table 13-1/13-1M, the same requirements apply to 36T (250T) and thinner sections of Grade 50 (345) materials. However, the combination of the strength increase of 50 (345) versus 36 (250), and the higher restraint of thicker versus thinner material have resulted in higher CVN requirements for the thicker Grade 50 (345) materials, as reflected in a higher minimum absorbed energy level of 20 ft-lb versus 15 ft-lb (27 J versus 20 J).

When high-performance steel (HPS) grades are encountered, the same requirements apply across all temperature zones. One of the goals that was established when HPS was developed was that the same steel could be used for bridges in all AASHTO temperature zones. Notice that the Zone III requirements are identical for thicker Grade 50 (345) material and the HPS equivalent. There is no increased demand

Table 13-3/13-3M. CVN Test Value of Weld Metal with Matching Strength for Fracture Critical Members [Adapted from AASHTO/AWS D1.5, Table 12.1 (AWS, 2015a)]		
Steel	**Minimum CVN Test Energy, ft-lb (J)**	**Test Temperature, °F (°C)**
ASTM A709 Grade 36 (250)	25 (34)	–20° (–30°)
ASTM A709 Grade 50 (345)	25 (34)	–20° (–30°)
ASTM A709 Grade 50W (345W)	25 (34)	–20° (–30°)
ASTM A709 Grade 70W (485W)	30 (41)	–20° (–30°)
ASTM A709 Grade 100/100W (690/690W)	35 (48)	–30° (–35°)

for fracture toughness in Zones I and II when HPS is used, but additional resistance is supplied by the HPS.

A comparison of the requirement for HPS 50WT (345WT) and HPS 70WT (485WT) shows that with the higher-strength steel, the CVN toughness requirements have been increased, both by requiring more absorbed energy (25 ft-lb versus 20 ft-lb) (34 J versus 27 J) as well as testing at lower temperatures (–10°F versus +10°F) (–23°C versus –12°C). This increased CVN toughness reflects the increase in stress that will likely be applied to the higher-strength steel, as well as the decrease in the temperature shift that occurs with higher-strength steels. The same pattern can be seen in the differences in the CVN requirements between HPS 70WT (485WT) and HPS 100WT (690WT).

A comparison of Tables 13-1/13-1M and 13-2/13-2M is also instructive. There is nothing that makes an individual member of a nonredundant structure any more fracture sensitive than an identical member in a redundant structure, if all conditions are identical. The higher requirements of Table 13-2/13-2M, typically shown as an increase in the required absorbed energy level, does not reflect increases on the demand side of the equation, but rather reflects risk; the consequences of fracture in a nonredundant structure are greater, and thus an increase in the material resistance to fracture has been specified for these structures. The disallowance of thicker sections of HPS 100WT (690WT) for fracture critical applications is another example of the influence of risk—the fracture resistance of HPS 100WT (690WT) in a redundant structure is identical to that in a nonredundant structure, but the consequences of fracture are more significant in the latter.

Weld metal CVN toughness requirements are contained in AASHTO/AWS D1.5 and are summarized in Table 13-3/13-3M.

The CVN toughness requirements summarized in Table 13-3/13-3M are not filler metal classification values but are for welding procedure qualification test plates made with parameters that reflect production welding variables. As the strength of the base metal moves from 50 ksi to 70 ksi (345 MPa to 485 MPa), the required energy increases from 25 ft-lb to 30 ft-lb (34 J to 41 J), reflecting a higher fracture toughness demand due to the higher stress levels that will likely be applied, and the higher residual stresses that will be experienced. The move from 70 ksi to 100 ksi (485 MPa to 690 MPa) steel results in both an increase in the absorbed energy level as well as a decrease in the testing temperature. The combination is used to deal with not only the aforementioned stress increases, but also the decrease in the temperature shift.

The AASHTO/AWS FCP does not contain any requirements for HAZ CVN toughness testing. The assumption is that the base metal requirements for the limited number of steels that are permitted and, with the heat input ranges used for typical bridge fabrication, will be such that the HAZ will have acceptable properties. Further, fatigue cracking that would create the initial flaw size, a, normally occurs at weld toes; while the fatigue crack may initially be located within the HAZ, it will typically exit the HAZ and enter the unaffected base metal before it is of a critical size that would initiate brittle fracture. See Section 13.8 of this Guide. Thus, the base metal, not the HAZ, is generally of more concern in terms of fracture resistance (Barsom, 2016).

13.7.2 AISC Provisions for Jumbo Sections

The topic of welding on jumbo sections is discussed in Section 14.4 of this Guide. The fracture toughness requirements for welding on what are now called rolled heavy shapes and heavy built-up shapes in the AISC *Specification* are discussed here as another example of material fracture toughness specifications to avoid brittle fracture. When flanges of rolled shapes exceed 2 in. (50 mm), and when built-up members are made from plate that exceeds 2 in. (50 mm), special criteria apply (see AISC *Specification* Sections A3.1c and A3.1d). These criteria were developed to provide resistance to fabrication and erection-related loading, including resistance to the residual stresses that result from thermal cutting and welding. No particular service loading conditions were assumed other than that the service loads would be tensile. Redundancy was not explicitly considered other than as an

underlying assumption that when members are this large, they serve an important function.

The required CVN toughness level for these heavy sections, whether rolled or built-up is 20 ft-lb at 70°F (27 J at 21°C). As is discussed in Section 14.4 of this Guide, the CVN specimens for these rolled shapes is taken from the web-flange intersection, the location of probable low toughness. AISC *Specification* Section J2.6 specifies that the toughness of the weld metal be controlled by requiring the filler metal to have a classification that requires 20 ft-lb at 40°F (27 J at 4°C) or lower.

13.7.3 AISC *Seismic Provisions* and AWS D1.8 Seismic Requirements

Welded connections for seismic service are extensively discussed in Chapter 11 of this Guide. The CVN toughness criteria were developed to preclude fracture during the low-cycle, inelastic deformation conditions expected to be experienced in design earthquakes. The base metal criteria in the AISC *Seismic Provisions* for heavy sections are the same as the criteria in the AISC *Specification* (see Section 13.7.2 of this Guide). For other steel sections, no additional criteria were imposed based on a survey that indicated that rolled shapes, even when no CVN toughness was specified, routinely met 15 ft-lb at 70°F (20 J at 21°C) (Cattan, 1995). It should be noted that some data from this survey was below this threshold, although a statistically insignificant amount, and most of the data were supplied by domestic (U.S.) producers.

Regarding the HAZ, the FEMA-sponsored investigations into the Northridge damage concluded that "Limited evaluation of CVN impact test data…suggests that the HAZ toughness should meet or exceed base metal toughness when reasonable welding heat inputs are maintained" (Johnson and Ramirez, 2000). On the topic of heat input, "Welds deposited at heat input levels below 90 kJ/in. (3.5 kJ/mm) produced a HAZ with higher toughness than that of the base material; however, toughness quickly decreased at higher heat input levels" (Johnson and Ramirez, 2000).

The FEMA-sponsored investigations established weld metal CVN toughness requirements (Barsom et al., 2000). As now contained in AWS D1.8, three criteria must be met: 40 ft-lb at 70°F (54 J at 21°C) when tested under high heat input conditions; 40 ft-lb at 70°F (54 J at 21°C) when tested under low heat input conditions; and 20 ft-lb at 0°F (27 J at −18°C) when tested in accordance with the applicable AWS filler metal specification. All three conditions are applicable for enclosed structures that are maintained at a temperature of +50°F (10°C) or greater. For lower temperature applications, the testing temperatures need to be adjusted. The aforementioned toughness levels are applicable when welding to steel with a specified minimum yield strength of 50 ksi (345 MPa) or less.

The criteria for weld metal CVN toughness as listed in AWS D1.8 do not guarantee that the welded connection will not fracture, regardless of load. Under sufficiently extreme conditions, any material will ultimately yield and rupture. Rather, these criteria were established to ensure that brittle fracture will not occur when the welds applied to the joint meet the AWS D1.1 quality acceptance criteria, as well as the CVN toughness criteria of AWS D1.8.

Dozens of seismic test assemblies have been conducted with good results that provide a degree of confidence in AWS D1.8 CVN toughness criteria; however, they have not been tested in an actual earthquake as of the time of the writing of this Guide.

13.8 INTERACTION OF FATIGUE AND FRACTURE

When structures are subject to cyclic loading, fatigue crack initiation and propagation is expected after enough cycles of loading with a sufficient stress range. In other words, for cyclically loaded structures, the flaw size, a, may change with time. As a result, the combination of fracture resistance, stress and flaw size may be such that there is no concern with brittle fracture when the structure is new, but after a sufficient number of loading cycles, the increase in the flaw size, a, may cause demand to exceed the material's resistance to fracture.

The interaction of fatigue with fracture has resulted in some confusion as to which properties and factors affect the two behaviors. Fatigue crack growth rates depend on the change in the stress, the size of the crack, and the type of material (e.g., ferritic versus pearlitic). Crack growth rates are independent of the steel strength and of the steel fracture toughness. Higher material fracture toughness levels are often specified for fatigue-sensitive applications because they permit the flaw size, a, to grow to a larger size before the onset of brittle fracture. The higher fracture toughness, however, does not change the fatigue crack growth rate.

When a fracture-sensitive, cyclically loaded structure is encountered, the engineer can both limit the fatigue crack growth and increase the fracture resistance. Fatigue crack growth is limited when stress ranges are reduced and when details with better fatigue resistance are used. Ideally, stress ranges are held below the threshold level for the detail, resulting in theoretically infinite fatigue life and no change in the flaw size, a.

The establishment and use of appropriate inspection intervals is an important aspect of managing existing structures that are subject to cyclic loading. Early detection of small cracks permits repairs to be made. However, as cracks become larger, crack growth rates increase, and the potential for brittle fracture more rapidly approaches.

Exposed steel in a greenhouse, Chicago, Illinois.

Chapter 14
Special Welding Applications

14.1 WELDING OF STEEL HEADED STUD ANCHORS

14.1.1 Introduction

A steel anchor, according to the AISC *Specification* Glossary, is a "headed stud or hot-rolled channel welded to a steel member and embodied in concrete of a composite member to transmit shear, tension, or a combination of shear and tension at the interface of the two materials" (AISC, 2016d). The term *steel anchor* was introduced into the AISC *Specification* in 2010 (AISC, 2010b), replacing the formerly used term *shear connector*. Steel anchors consist of steel headed stud anchors or steel channel anchors. In casual conversation, steel headed stud anchors are referred to as *shear studs*. The now obsolete term *shear connector* restricted the loading to shear; the new term is more inclusive in terms of loading. The phrase *steel headed stud anchor* includes only studs but includes other forms of loading beyond shear.

In the structural steel industry, welded studs are generally used to achieve composite behavior between concrete and steel, and the term *shear studs* accurately describes both the device and loading for this application. However, studs may also be welded to embed plates as part of the anchorage into concrete and may be loaded in tension. Some studs are threaded (not headed), permitting various types of materials to be attached to the threaded stud. When dealing with the topic of welded studs, it is important to distinguish the type of stud (headed or threaded), the type of loading (shear or tension), and whether composite action between the concrete and steel is expected. The process of arc stud welding is discussed in Section 2.8 of this Guide.

Most of the design-related requirements for steel anchors are contained in AISC *Specification* Chapter I, Design of Composite Members. Welding requirements are addressed in AWS D1.1, clause 7, Stud Welding. Quality issues associated with stud welding are addressed in AISC *Specification* Chapter N as well as AWS D1.1, clause 7.

The requirements in AISC *Specification* Chapter I are for composite construction. Two basic systems are addressed: steel anchors in composite beams in AISC *Specification* Section I8.2 and steel anchors in composite components in AISC *Specification* Section I8.3. A composite beam is defined in the AISC *Specification* Glossary as a "structural steel beam in contact with and acting compositely with a reinforced concrete slab," whereas a composite component is a "member, connecting element or assemblage in which steel and concrete elements work as a unit in the distribution of internal forces, with the exception of the special case of composite beams where steel anchors are embedded in a solid concrete slab or in a slab cast on formed steel deck." The former deals with concrete slabs that work in conjunction with steel beams while the latter are for composite systems such as concrete filled steel tubes. The design of the steel anchor connections in the two situations is different. AISC *Specification* Chapter I does not provide design limits for steel anchors in noncomposite applications, such as embed plates.

AWS D1.1, clause 7, provides for three types of studs: Type A general-purpose studs, used for purposes other than shear transfer in composite construction; Type B bent or otherwise configured studs, used for composite construction; and Type C cold-worked studs that are of higher strength than Type A and B. For composite construction, Type B studs made of ASTM A108 (ASTM, 2016) material are used.

When studs are welded to beams with thin flanges and not welded over the beam web, a common failure mode is for tearing to occur in the flange before the shear-resisting capacity of the anchor is exceeded. To guard against this, AISC *Specification* Section I8.1 requires the diameter of the stud to be no greater than 2.5 times the thickness of the flange, unless the stud is directly located over the beam web. AWS D1.1, clause 7.2.7, however, requires three times the thickness of the base metal, except when welding through metal decking; then the value becomes the same 2.5 times as is required by the AISC *Specification* (AWS, 2015c).

14.1.2 Composite Beams

AISC *Specification* Section I8.2 stipulates the minimum ratio of height-to-diameter of the stud is four. This ratio is necessary to ensure that concrete failure does not occur. Studs are required to be ¾ in. (19 mm) or less in diameter, except where anchors are utilized solely for shear transfer in solid slabs in which case ⅞-in.- (22 mm) and 1-in.- (25 mm) diameter anchors are permitted. After welding, AISC *Specification* Section I3.2c.1(b) requires the stud to extend not less than 1½ in. (38 mm) above the steel deck, and there must be at least ½ in. (13 mm) of concrete on top of the stud. AWS D1.1, clause 7.2.7, stipulates that studs may be welded through decking, but only through up to two plies.

When calculating the shear strength of a stud anchor, two factors are used to account for geometric effects: R_g is a coefficient to account for group effect and R_p is a position

effect factor. The factors to consider are as follows: whether the stud is welded directly to the steel shape or through the decking; the orientation of the deck as compared to the steel shape (parallel or perpendicular); the number of studs in a deck rib; and the geometry of the stud as compared to the deck rib. Values for R_g and R_p are contained in AISC *Specification* Section I8.2a and presented in tabular form in a User Note. The AISC *Manual* provides computed values for different stud diameters in Table 3-21 (AISC, 2017).

Most composite steel floor decking has a stiffening rib in the middle of each deck flute, requiring studs to be placed on one side or the other of the rib. The location of the stud as compared to the rib affects the capacity of the stud, creating a weak and strong position when the decking is perpendicular to the supporting steel shape. Equation I8-1 assumes the weak orientation, a conservative approach because it is often difficult to control the placement of the studs in the field.

AISC *Specification* Section I8.2d outlines steel anchor detailing requirements. The minimum center-to-center spacing of studs is limited to four diameters in any direction. For composite beams that do not contain anchors located within formed steel deck oriented perpendicular to the beam span, the minimum spacing is limited to six diameters along the longitudinal axis of the beam. The maximum center-to-center spacing is not permitted to exceed eight times the total slab thickness or 36 in. (900 mm).

14.1.3 Composite Components

According to AISC *Specification* Section I8.3, for normal weight concrete, the minimum ratio of height-to-diameter of the stud is five for anchors subject to shear and eight for anchors subject to tension or a combination of tension and shear. For lightweight concrete, the minimum ratio of height-to-diameter of the stud is seven for anchors subject to shear and 10 for anchors subject to tension. According to AISC *Specification* Section I8.3e, the minimum center-to-center spacing of studs is four diameters in any direction. The maximum center-to-center spacing is not permitted to exceed 32 times the stud diameter.

14.1.4 Stud Application Qualification Requirements

Some stud application procedures are prequalified, based on tests performed by the stud manufacturer's stud base qualification tests. When welding on inclined surfaces (>15° slope from horizontal), nonplanar surfaces, higher strength steels, or through decking, AWS D1.1, clause 7.6.1, requires the stud application be qualified. Qualification is straightforward—a mocked up sample of the configuration to be qualified is assembled and 10 stud welds are made. The welded studs are then tested by bending, torqueing or tensioning according to AWS D1.1, clauses 7.6.2 to 7.6.7.

14.1.5 Production Control

At the beginning of each day or production shift, and at the beginning of a particular set-up, the first two studs are to be visually inspected and mechanically tested. For composite applications, the typical practice is to make two stud welds on a production part, allow the studs to cool, and then bend the stud approximately 30°, giving rise to the practice of "shoot 2, bend 30." Bending is usually accomplished by hitting the stud with a hammer, but a pipe can be installed over the stud to facilitate bending, the latter being helpful if done in cold weather (AWS D1.1, clauses 7.7.1 to 7.7.2). The bent stud may be left as is in the bent condition when used for composite behavior.

14.1.6 Repair of Stud Welds

Automatic stud welds are required to have a full 360° of flash with no undercut (AWS D1.1, clause 7.7.1.3). Studs that do not have this flash may be repaired by adding the minimum fillet weld in place of the missing flash (AWS D1.1, clause 7.7.3).

14.1.7 Studs Welded with Traditional Arc Welding Processes

Studs are typically applied by automatic stud welding, but may be welded with flux-cored arc welding (FCAW), gas metal arc welding (GMAW) or shielded metal arc welding (SMAW) as stipulated in AWS D1.1, clause 7.5.5. The size of such welds is subject to two criteria: a minimum size for adequate heat input into the base metal (AWS D1.1, clause 7.5.5.5) and a minimum size to develop the strength of the stud (AWS D1.1, clause 7.5.5.4); both criteria must be met. Welding studs with traditional welding processes is not easy, particularly for small-diameter studs. No special welder qualification tests are prescribed in AWS D1.1 for this application; practice on mocked-up samples in advance of welding on actual parts is suggested.

14.1.8 Inspection

Production automatic stud welds are required to show a full 360° flash around the perimeter. Studs lacking this flash may be bent approximately 15° in a direction opposite of the missing flash. Studs that can endure this bending without any sign of failure are acceptable and the bent stud can be left as is without straightening (AWS D1.1, clause 7.8).

Studs used for composite behavior are allowed to vary from the drawing location by a maximum of 1 in. (25 mm). Studs are required to be no closer to the edge of a part than the stud diameter plus ⅛ in. (3 mm) but are preferred to be no closer than 1½ in. (38 mm) to the edge (AWS D1.1, clause 7.4.5).

Table 14-1. Diameter versus Melt-Off Length for Shear Studs	
Stud Diameter, in. (mm)	**Nominal Melt-Off Length, in. (mm)**
⅜ to ½ (10 to 13)	⅛ (3)
⅝ to ⅞ (16 to 22)	3⁄16 (5)
1 to 1¼ (25 to 31)	¼ (6)
For studs shot through galvanized decking, melt off is typically ¼ in. (6 mm). Table adapted from Houston and Houston (2015).	

14.1.9 Stud Melt-Off

During stud welding, a portion of the stud length is melted and becomes part of the weld metal, reducing the length of the stud by a small amount. The amount of material that is consumed is called burn-off or melt-off. The amount of melt-off is proportional to the stud diameter. Melt-off needs to be considered when studs are ordered for a project because studs are normally specified in terms of their before-welding length. Table 14-1 contains typical melt-off dimensions for different stud diameters.

14.2 WELDING ON GALVANIZED STEELS

14.2.1 General

Galvanized materials may consist of electroplated sheet materials (as are often encountered with sheet steel decking) as well as hot-dipped structural elements. Electroplated sheet steel components used for structural steel applications are typically welded without any particular difficulty. However, when welding on hot-dipped parts, the zinc may cause excessive porosity, or may enter into the liquid weld metal and lead to segregation cracking (see Section 6.3.1 of this Guide). This is more problematic than porosity as the potential consequences of cracking are more serious, and moreover, such cracking is often difficult to detect. Additionally, significant quantities of fume are released when galvanized steel is welded and extra measures may be required to protect the welder.

AWS D1.1 and the AISC *Specification* do not directly mention welding on steel surfaces that have been hot-dipped galvanized; such welding is neither explicitly prohibited nor permitted. Hot-dipped galvanized members have been successfully welded in some cases, while problems have been encountered in others. Accordingly, while not required by these standards, special attention is warranted when critical welds are deposited on hot-dipped galvanized surfaces. The recommended testing as discussed in Section 14.2.2 of this Guide is advisory information and not a summary of codified requirements.

Cracking tendencies of welded galvanized steel members depend on the following factors:

- The silicon content of the weld metal
- The degree of penetration of the weld beyond the root
- The thickness of the base metal (which affects restraint)
- The coating weight of the zinc (a function of the coating thickness)
- The microstructure of the zinc coating, which is related to the base metal composition and the silicon content in particular (AWS, 1972)

14.2.2 Testing

For critical applications involving hot-dip galvanized steels, the potential influence of the coating should be investigated. Sample weldments should be made and visually inspected for cracking or excessive porosity. Polished and etched cross sections can reveal internal porosity or cracks and can permit confirmation of fusion to the base metal. A fillet weld break test (described in AWS D1.1, clause 4.11) should reveal any problems associated with making fillet welds on coated materials. For groove welds, galvanized coatings (if present) on the groove weld surfaces should be removed, or if not removed, the welding procedure qualification tests should be administered in accordance with AWS D1.1, clause 4, to show that the coating will pose no problems.

Test welds, including those made for WPS qualification testing, should duplicate as closely as possible the production conditions that will be encountered, including the thickest coatings that will be used. The limitation of variables contained in AWS D1.1, Table 4.5, may not be applicable when evaluating the weldability of various coatings. For example, Table 4.5 permits different low-hydrogen covered electrodes to be interchanged without WPS requalification. However, such changes may or may not be acceptable when welding on galvanized steel. A more conservative approach is to permit only the same conditions that were used on the qualification test to be used in production.

14.2.3 Ventilation

When heated by welding, the galvanized coatings emit fumes that may be harmful to the welder. Adequate ventilation must be provided, as is true for all welding, and respirators may be required. ANSI Z49.1:2012, *Safety in Welding, Cutting, and Allied Processes* (AWS, 2012a), available as a free download from AWS (www.aws.org), should be consulted for information in this regard. Available from the same website are Safety and Health Fact Sheets. *Safety and Health Fact Sheet No. 25* (AWS, 2014a) deals with metal fume fever, a condition that is normally associated with overexposure to zinc oxide (ZnO) that can occur when thermally cutting or welding on galvanized steels. See Chapter 18 of this Guide.

14.3 WELDING ON PRIMED AND PAINTED STEEL

14.3.1 General

Coatings applied to steel surfaces range from a light coat of primer to various final coatings of multiple-coat paint systems. For new work, final paint coatings are normally applied after welding because the heat of welding will locally destroy the paint; welding on primer-coated steel is a more common issue for new construction. For repair and rehabilitation work, welding on previously painted surfaces may be required. Removal of primers and paint is expensive and thus the ability to weld on coated steels is desirable, but weld quality may suffer. Additionally, welding on coated surfaces may create problematic fumes.

When coatings are thin, welding can typically be performed without any harmful effect on the weld, but when the coatings are thick, weld quality may suffer. Critical variables to consider when determining the suitability of welding on various coatings involve the coating type, the thickness of the coating, and the welding process and procedure. The welding-related problems that can occur when welding on thick coatings include porosity, cracking and incomplete fusion. Many paints contain hydrocarbons which are a source of hydrogen and can lead to cracking. Porosity will typically, but not always, extend to the weld surface when welding on heavily coated surfaces, making it easy to detect such problems in production. In extreme cases, very thick coatings may preclude proper fusion. Fortunately, heavy coatings of this nature often interfere with the flow of electrical current as well, and thus it is difficult to establish and maintain an electric arc under such conditions.

The potential influence of the material coating on weld quality also depends on the joint and weld type. For example, plate may be primer coated then thermally cut and beveled; the thermal cutting operations will burn away some of the primer, leaving a cut edge that is free of primer. Fillet weld on the surface of primed plate will be more affected by the primer, whereas groove welds made on the thermally cut bevel faces will be essentially immune from the effects of primer applied before cutting. On the other hand, if the plate is primer coated after beveling, the presence of the primer may be highly problematic.

14.3.2 Requirements

AISC *Specification* Section M3.5 addresses the issue of field welding through coating by requiring that surfaces within 2 in. (50 mm) of any field weld be free of materials that would prevent proper welding or produce objectionable fumes during welding. AISC *Specification* Section M4.5 requires that surfaces in and adjacent to joints to be field welded are prepared as necessary to ensure weld quality. The Commentary suggests that if there is shop paint on surfaces adjacent to joints to be field welded, they may be wire brushed if necessary to assure weld quality. AWS D1.1, clause 5.14.4.2, allows welds to be made on surfaces with surface protective coatings, providing the required weld quality is achieved.

Primers can be classified in accordance with AWS D3.9, *Specification for Classification of Weldable Primers* (AWS, 2010b). This allows for various primers to be compared and provides a quantifiable means to assess the paint before production welding takes place.

14.3.3 Ventilation

When various primers and paints are heated by welding, special precautions may be necessary to protect the welder and others in the workplace from such fumes. See Chapter 18 of this Guide for safety-related references.

14.4 WELDING ON HEAVY SHAPES

Welding on thick, restrained steel is always a challenge, and successfully welding on rolled heavy shapes is no exception. AISC *Specification* Section A3.1c uses the term *rolled heavy shapes* to describe rolled shapes with flange thicknesses exceeding 2 in. (50 mm). The term *built-up heavy shapes* is used in AISC *Specification* Section A3.1d to describe fabricated shapes made from plate exceeding 2 in. (50 mm). In the case of the rolled heavy shapes, these were formerly the Group 4 and 5 rolled shapes, typically called jumbo sections. Special base metal, detailing, thermal cutting, and filler metal requirements apply when tension splices are made to rolled heavy shapes and built-up heavy shapes.

Originally contemplated for use as column sections, these rolled heavy shapes found use as tension members in trusses and other tensile members. A combination of material properties, detailing practices, and workmanship problems, and perhaps other issues, resulted in some cracking during fabrication and erection (Doty, 1987; Fisher and Pense, 1987; Blodgett and Miller, 1993). In response, the AISC

Specification imposed additional requirements applicable to heavy shapes (rolled and built-up), which will be reviewed in the following paragraphs.

An example of a tension chord splice in a truss will be used as an illustration, although the principles are applicable to other situations where heavy members are joined by welding. The typical cracking that had been experienced in the past was welding-related, but the cracks were not in the weld metal. Cracking occurred in the base metal, driven by the residual tensile stresses created by thermal cutting as well as the shrinkage stresses caused by welding, not by service loads. Cracking often initiated from workmanship-related notches associated with thermally cut weld access holes. Investigation into the problems revealed that near the web-to-flange interface of the heavy hot-rolled shape, there existed material with low Charpy V-notch (CVN) toughness. This low fracture toughness zone was the result of several factors. First, during solidification of the steel from which the shape was made, carbon and other ingredients segregated toward the middle, creating a core with an enriched composition. Second, this core region experienced less mechanical working during the rolling of the shape, and finally, the region cooled more slowly than would the surface of the shape. Thermal cutting of the weld access holes occurred at the same general location as where this core existed. While laboratory testing of steel taken from the core region identified this zone of low fracture toughness, this would not have been discovered even if the shape was required to meet minimum CVN toughness levels because ASTM requirements in effect at the time required the CVN specimens to be extracted from the flanges of the shape, not from this core region. It was in this core region that notches and small cracks from thermal cutting were formed. The residual stresses created by welding, combined with the low localized fracture toughness at the juncture of the web and the flange, enabled cracks to propagate elsewhere.

The solution to the problem was multi-dimensional. To ensure that the base metal had adequate fracture toughness to resist fabrication stresses, a minimum CVN toughness of 20 ft-lb at +70°F (27 J at 21°C) was imposed in AISC *Specification* Section A3.1c. The CVN test specimen was required to be taken from a new location—not from the flange tip as was typically the case, but from a portion of the web directly under the flange, the location expected to have the lowest CVN values. This location is now known in ASTM specifications as S30 CVN Impact Test for Structural Shapes—Alternate Core Location.

To control notches in the area, a maximum surface roughness value was imposed. When the radius portions of the access holes were to be thermally cut, a preheat of 150°F (66°C) before thermal cutting was mandated to decrease the residual stresses on the cut surface, limit hardening of the flame cut edge, and limit cracking during thermal cutting. Drilling a hole to form the radius eliminated the potential for harmful metallurgical structures developing due to thermal cutting, as well as reducing the residual stresses from cutting (although such a practice was not mandated in the AISC *Specification*). All thermally cut surfaces were required to be ground to a bright finish. Initially, the thermally cut and ground surfaces were required to be inspected with magnetic particle testing (MT) or penetrant testing (PT). The requirement for inspection of flame cut surfaces was deleted in the 2016 AISC *Specification* because anecdotal evidence suggested that the measures that were taken to preclude cracking from thermal cutting had been successful, and there are no known examples where cracking had been detected by these nondestructive testing (NDT) methods.

To help minimize the concentration of residual stresses from welding, the configurations of the weld access holes were modified and increased in size, not simply for welding access, but to minimize the interaction of multi-directional residual stress fields created by the weld shrinkage (see Section 4.2.2 of this Guide).

While not incorporated into the AISC *Specification*, welding sequences to minimize residual stresses were developed. Balanced welding was encouraged; some on the web, some on the flanges, versus completely welding the web first, and then the flanges, or vice versa. Weld details that minimized the weld volume were encouraged. Because the cracking was experienced from the access holes, welding sequences that placed the majority of the weld metal on the outside of the flanges, as compared to the inside near the access holes, were encouraged. Also, the final weld passes with the highest final residual stresses were encouraged to be placed on the side of the flange away from the access holes (Blodgett and Miller, 1993).

Initially, the AISC *Specification* called for weld tabs to be removed after welding, as well as for weld backing (if used) to be removed. Backing removal was often difficult to accomplish, particularly in the field where overheat backing removal and rewelding was required. Further, it was questionable as to what value was added by this mandated activity.

The minimum level of preheat for welding was initially specified to be 350°F (180°C), even though AWS D1.1 never required preheats of this level for prequalified WPS (AISC, 1994b). This was used to help minimize residual stresses. The use of the higher preheat levels were expensive and difficult to maintain. Most importantly, experience had shown that the use of the AWS D1.1 preheat levels could be used to successfully join rolled heavy shapes and the mandated higher preheat level was eliminated from the AISC *Specification*. When necessary, the contractor can and should utilize higher preheat levels than the minimum values prescribed in AWS D1.1.

The requirements for tab removal, backing removal and

extra preheat, having been determined to be unnecessary and having the potential to cause more harm than good, were deleted. Also, requirements for notch-tough weld metal were added to AISC *Specification* Section J1.5.

When all the changes made to the AISC *Specification* were properly applied on projects involving welding on heavy sections, the cracking problems were essentially eliminated (Miller, 2010).

14.5 WELDING ON HIGHLY RESTRAINED MEMBERS

Welding on highly restrained members can be a challenge because of cracking concerns. High restraint is normally associated with thicker steels, which often require larger welds. Most structural steel weldments are not highly restrained or highly constrained. However, when such conditions are encountered, special precautions must be taken to mitigate cracking tendencies.

Hot, expanded weld metal will attempt to shrink as it cools, and the surrounding base metal resists the shrinkage. When welding on thin, flexible members, the weld metal shrinkage is evidenced as distortion (see Chapter 7 of this Guide). For typical restraint, the shrinkage causes the weld metal and surrounding steel to yield. When the resistance offered by the surrounding steel is equal to the shrinkage stresses created by the contraction of weld metal, residual tensile stresses result. These residual tensile stresses are surrounded by compressive stresses.

For highly restrained conditions, the level of resistance provided by the surrounding steel to the shrinkage of the weld metal is even greater than in the aforementioned situations and biaxial or triaxial tensile stresses may be created. Under multi-axial tensile stresses, otherwise ductile steel may behave in a brittle manner (Barsom and Rolfe, 1999), and weld metal is no different in these situations. The residual stresses may be higher than the uniaxial yield strength of the weld and base metal and cause cracking instead of yielding to occur. This is the challenge of welding on highly restrained connections.

Restraint cannot be easily quantified, and thus it can only be qualitatively described with terms like *heavily* and *highly restrained*. Restraint generally has to be identified by feel and experience. Concerns about cracking when welding on highly restrained members typically involve all of the following: thick steel, usually over 2 in. (50 mm); large, multiple-pass welds, typically with a throat of 1 in. (25 mm) or greater; weld lengths of 1½ ft (0.46 m) or more; and joints to be welded that intersect from at least two orthogonal directions. Highly restrained members would include splices of heavy sections (previously discussed in Section 14.4 of this Guide), welded splices on transfer girders, and splices and connections on trusses.

Most welded connections are not highly restrained, and even highly restrained members are easily welded when joined with small welds. Large welds are necessary to develop residual stresses of a magnitude that would crack thick plate. Large welds are routinely successfully made on unrestrained thick plate. The challenge is when all of the aforementioned factors occur concurrently—thick plate, large welds and intersecting joints. When welds intersect from all three orthogonal directions, the longitudinal shrinkage of the welds creates triaxial stresses at the intersection point, inhibiting the ability of the steel to accommodate the shrinkage strains in any direction, and cracking may occur.

Compounding the challenge of welding under such conditions is the reality that assemblies of highly restrained members typically serve critical functions. As redundancy decreases, for example, the remaining members are typically larger and thus more restrained, and simultaneously more critical in that fewer alternate load paths exist. Accordingly, it is important that such connections be properly designed, detailed, fabricated and inspected.

Fracture occurs because of cracks and crack-like discontinuities, low resistance to fracture (typically measured in terms of CVN toughness), and high applied or residual stresses (see Chapter 13 of this Guide). For fabrication-related fracture, the stresses that drive cracking are the residual stresses of welding. When welding on highly restrained members, surfaces of materials should be smooth. Copes and weld access holes, flame-cut and sheared edges, punched holes, and other prepared surfaces that will be subject to the shrinkage stresses of welding should all be carefully inspected before welding to ensure freedom from stress raisers. Grinding questionable areas is a simple way to eliminate potential crack initiation sites.

Using base metals and weld metals with defined fracture toughness levels is helpful. Preheat can improve the fracture toughness of the material during fabrication in this manner; at higher temperatures, steel has improved fracture toughness. For some steels, where the fracture toughness transition temperature is near room temperature, using preheat may shift the fracture toughness of the material from the lower shelf to the upper shelf, providing significantly better resistance to fracture when at the elevated temperatures. Improved fracture toughness at elevated temperatures will assist in resisting welding-imposed residual stresses, but when the steel returns to room temperature, the fracture toughness will return to the previous level.

Principles that reduce shrinkage stresses, and those that reduce restraint, should be applied when heavy sections are welded. Section 6.5 of this Guide provides coverage of measures to reduce the shrinkage stresses, while Section 6.6 discusses techniques to reduce restraint. Finally, Section 6.7 provides information on post-welding operations to reduce the residual stresses. These principles are directly applicable to welding on rolled heavy shapes and built-up heavy shapes.

14.6 WELDING HSS

14.6.1 Introduction

A hollow structural sections (HSS) is defined in the AISC *Specification* Glossary as "square, rectangular or round hollow structural steel section produced in accordance with one of the product specifications in Section A3.1a(b)." The definition requires that HSS members be produced to a material specification, such as ASTM A1085; box sections fabricated from plate may have the appearance of HSS but are not considered HSS because such fabrications are not governed by a material specification.

AISC Design Guide 24, *Hollow Structural Section Connections* (Packer et al., 2010), is an excellent publication, devoted to the single topic of HSS connections. Connection detailing, fabrication practices and inspection procedures for HSS are quite different from those associated with plate and shape fabrication. This section will serve as a brief introduction to the overall topic, with a focus on welding HSS. Special welding requirements for HSS are contained in AWS D1.1, clause 9. The coverage of HSS issues in this Guide is only minimal and AISC Design Guide 24 should be consulted for more extensive coverage.

14.6.2 HSS Connections

Connection methods for HSS fit into two broad categories: directly welded and welded/bolted connections. Unlike structural shapes that can be assembled with purely bolted connections, HSS nearly always involve at least some welding, even if only to attach detailing material that permits bolting.

HSS can be joined to plates, shapes or other HSS. HSS-to-plate examples include HSS columns to base plates and single-plate shear connections to HSS columns, as well as HSS braces to gusset plates. Shapes may be directly connected to HSS columns in moment connections (typically with a wide-flange beam), or tube columns to supporting beams. These are relatively easily designed and fabricated connections, although the limit states that must be considered in their design may be different than those assumed for typical applications involving shapes and plates.

A more complicated use of HSS involves HSS-to-HSS connections where the intersections may take the form of a T, K or Y, as shown in Figure 14-1. When square and rectangular box sections are used, the intersection between the two tubular members will occur on a plane or planes. When round or oval HSS are used, the intersection will be a complex, three-dimensional, saddle-like shape.

In most applications, the size of HSS is such that access to the inside of the tubular member is impossible; in such situations, all welding must be done from one side. It may be difficult or impossible to fit backing to the root of HSS, so different approaches are required for complete-joint-penetration (CJP) groove welds made to HSS versus what is used when fabricating structures from plate and rolled shapes. Even when backing can be inserted before welding, it is usually impossible to remove the backing after welding.

AWS D1.1, Annex J, defines a tubular connection as "a connection in the portion of a structure that contains two or

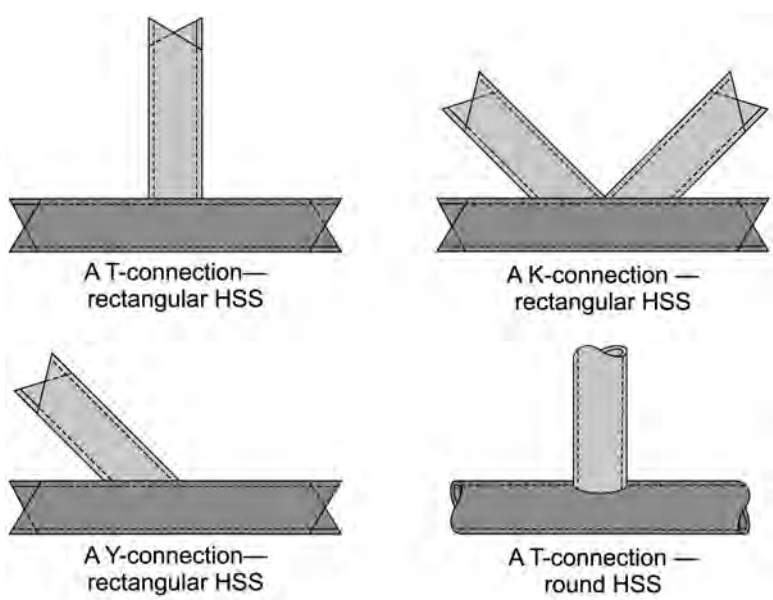

Fig. 14-1. HSS T-, K- and Y-connections.

more intersecting members, at least one of which is a tubular member." By this definition, welding a tubular column to a flat base plate creates a tubular connection, which is inconsistent with common usage. An alternative definition and one more consistent with typical usage would be a connection that contains two or more tubular members intersecting in other than an axial orientation. This definition would include T-, K- and Y-connections but would exclude the aforementioned column to base plate weld and would also exclude simple splices of HSS members.

14.6.3 Connections and HSS Member Size

The relative differences in stiffness between the branch elements and the face of a main or overlapping HSS member are typically such that loading on the weld is highly nonuniform. One or more of the limit states shown in Figure 14-2 typically control the connection strength. Welds can be sized to develop the lesser of the strength of the branch element wall or the local strength of the main member face. Alternately, the weld can be designed for the actual loads in the branch elements using the effective length approach provided in AISC *Specification* Chapter K. Either approach addresses the uneven load issue in these welds and avoids their premature failure or unzipping.

In HSS design, the demands on the connection may require that the HSS member be increased in size beyond that required for the stress in the member. The chord member wall thickness is often the controlling element in determining connection strength.

14.6.4 Overall Configurations of HSS Assemblies

When joining rectangular HSS, branch members can be made of slightly more narrow members than main members to avoid the difficulty of welding on the rounded edge of the main member; however, if made significantly narrower, the flexibility of the face becomes a problem. Figure 14-3 illustrates a matched connection (nonpreferred) as well as a stepped connection (preferred). In the case of the matched connection, a fillet weld can be used on two sides, but a flare bevel groove must be used on the other sides. Depending on the corner radius of the main member, a gap may exist at the root, requiring the use of backing or more careful profile cutting of the branch member. These problems are eliminated, however, when the branch member is slightly narrower and simple fillet welds can then be used. Preferably, the branch member is narrow enough to permit the fillet weld to be placed on the flat side of the HSS chord as opposed to the rounded corner.

For K-connections, gapped connections are preferable to overlapped connections from a welding perspective because joint preparation is easier, and access for welding is typically improved. Overlapped connections have increased strength capacity but are harder to fabricate. The overlap creates a hidden weld that either must be made before the overlapped connection is assembled or left unwelded; an unwelded portion must be accounted for in design. For round HSS, the preference for gapped connections is even greater. AISC *Specification* Commentary Section K3 discusses conditions in which the hidden weld can be omitted, making fabrication much more feasible.

For K- and Y-connections, the acute dihedral angle should be 30° or more, to facilitate welding and inspection of the weld in this area.

14.6.5 Cutting and Preparing Joints in HSS

Square and rectangular HSS may be cut with methods similar to those used for structural shapes—saws and thermal cutting methods. Sawing is particularly effective with HSS because the cut edges are often on one plane. Complex intersections, however, may necessitate careful thermal cutting or multiple saw cuts. For the thicknesses of materials that are typically involved, plasma and laser cutting are particularly effective.

Round HSS provide a particular challenge with respect to fabricating the tubes for directly welded connections in that the ends of the tubes must be saddle cut for T-, K- and Y-connections. For HSS T-connections with a 90° intersection, the cut on round HSS is relatively easy to make, but much more complex than a similar connection made with square or rectangular HSS. When round HSS K- and Y-connections are made, the cut profile becomes more complicated, and the situation is complicated further when there is a need for an ever-changing bevel angle on the edge. Fortunately, computer controlled thermal cutting equipment is available to cut such profiles, greatly simplifying the process while increasing fit-up quality as shown in Figure 14-4. For fabricators who do not have equipment of this type, there are companies that will cut HSS on a contract basis.

When round HSS are used in a truss-like assembly, special attention must be paid to the assembly sequence. For example, if the chords are fixed relative to each other, a cut-to-length vertical member cannot be inserted into the space as shown in Figure 14-5; this problem does not occur when box HSS is used. Special techniques can be used to overcome this problem, typically involving cutting the tube and making an extra splice in it. A planned out sequence can simplify matters; an "E" configuration is made first and the final chord added later.

14.6.6 Welding HSS

HSS applications often require all-position welding. In the case of shop-welded square and rectangular HSS, the parts can often be rotated to allow for horizontal positon welding. For shop welding of round HSS, the orientation of the joint

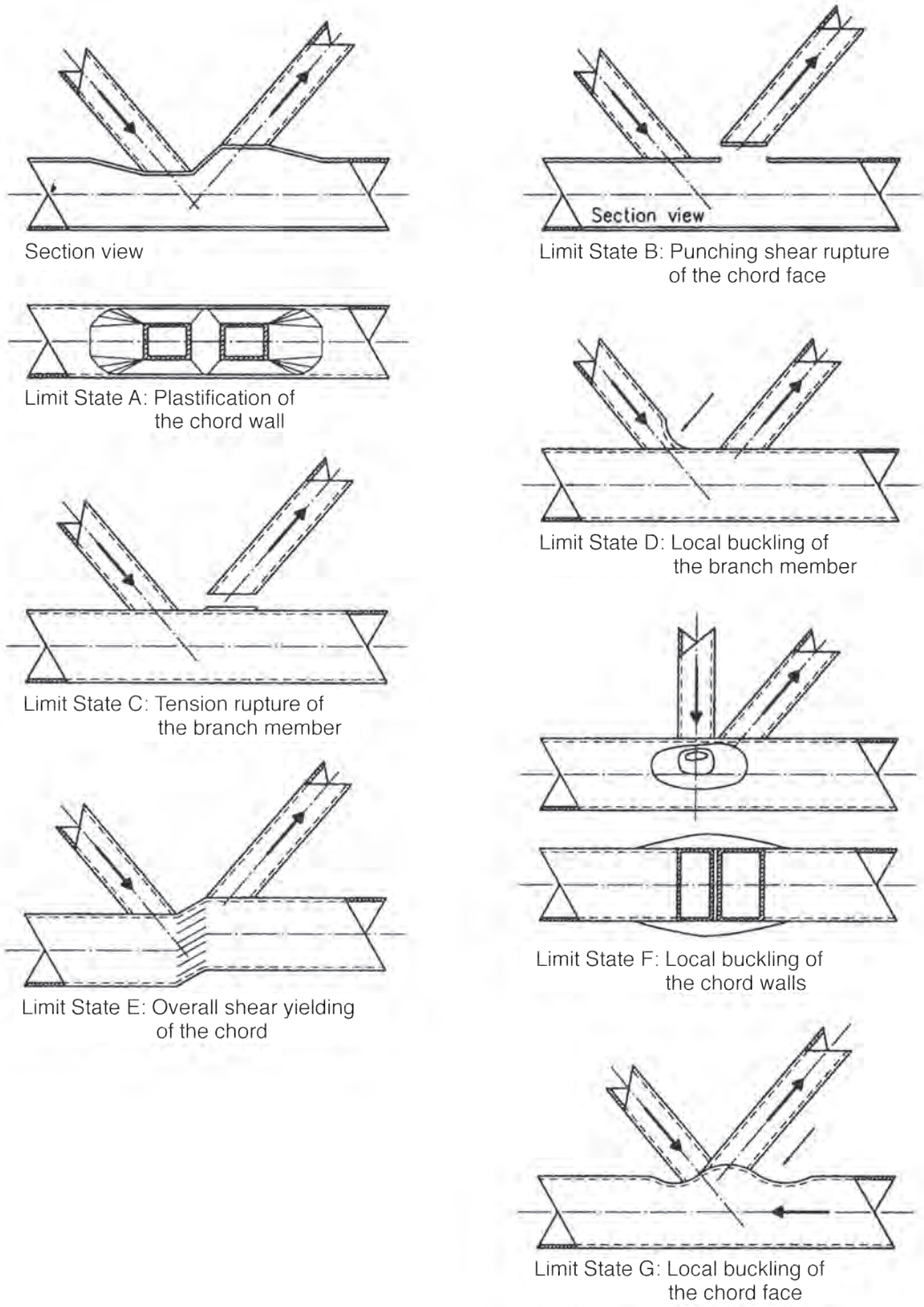

Fig. 14-2. Limit states for K-connections in HSS.

continually changes, and the welding process and WPS will usually have all-position capability. Field welding of HSS routinely requires all position welding capability.

HSS material is generally clean and free of heavy mill scale and oxides; therefore, the welding process does not need the deoxidizing capability that might be necessary for welding on hot-rolled material.

A key process requirement, particularly for T-, K- or Y-connections, is to have easy access to the joint. SMAW provides for easy access in terms of getting into the root of the joint, although the initial length of the electrode may be restrictive in some situations. SMAW is relatively slow and thus undesirable in most production situations. Gas-shielded processes require shielding gas nozzles that often restrict access and visibility, particularly on members that intersect at acute angles. Self-shielded FCAW (FCAW-S) overcomes this restriction and is often used to fabricate T-, K- or Y-connections.

14.6.7 6GR Welder Qualification

To demonstrate that welders have the skills necessary to make the complicated welds associated with HSS connections, they must take and pass a specialized qualification test known as a 6GR test according to AWS D1.1, clause 9.19 and Table 9.13. The test is required for welders making CJP groove welds on tubular members intersecting in T-, K- or Y-configurations, from one side, without backing, when the welding must be performed in all positions. The test is not required, however, for all welding on HSS members. The standard welder qualification tests are a sufficient measure of a welder's skill at welding tubular columns to base plates, for example. Similarly, when welding T-, K- or Y-connections with backing, the 6GR test is not required.

This demanding welder qualification test can be avoided when tubular designs utilize CJP groove welds with steel backing, partial-joint-penetration (PJP) groove welds, or fillet welds. For building applications (as compared to offshore structures), the member sizes are such that alternatives to one-sided, open root CJP groove welds are often possible. While it is difficult to provide steel backing in round HSS applications involving T-, K- and Y-connections, this is more easily done when square and rectangular HSS is utilized.

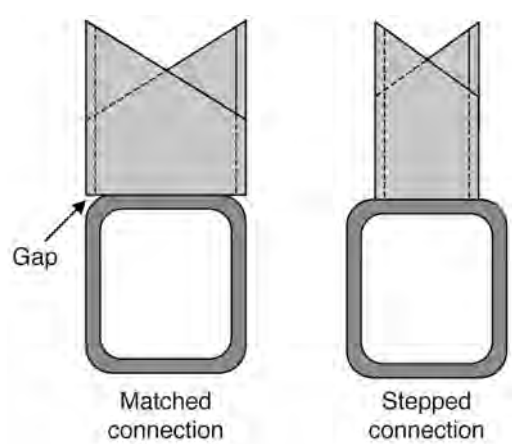

Fig. 14-3. HSS details.

14.7 WELDING AESS

14.7.1 Introduction

"Architecturally Exposed Structural Steel (AESS) is steel that must be designed to be both structurally sufficient to support the primary needs of the structure of the building, canopies or ancillary structures, while at the same time be exposed to view, hence, constituting a significant part of the architectural language of the building" (Boake, 2012). AESS is an exciting and growing form of steel construction, being used in sports stadiums, airports, shopping malls and churches. Just as the members for AESS may be treated differently from routine structural steel, so the welds may need to be treated differently as well.

In 2016, the AISC *Code of Standard Practice for Steel Buildings and Bridges* (AISC, 2016a) significantly expanded the provisions for AESS, incorporating them into Chapter 10. By defining categories of AESS, owners, architects, engineers, fabricators and erectors all have a better understanding of what is expected on such projects, not only in terms of how the steel is expected to look, but how much cost premium is likely to be experienced for the various categories.

AESS designs are usually different than conventional structural steel systems. AESS commonly utilizes HSS as structural members (see Section 14.6 of this Guide). HSS members appear lighter and have less surface area for preparation and coating than wide-flange equivalents. AESS often employs steel castings (see Section 5.4.8 of this Guide) which allow for complicated connection configurations and provide a seamless appearance. Welded connections are popular for AESS applications as they provide a clean, uncluttered, natural look.

Fig. 14-4. Computer-controlled HSS cutting machine.

In addition to different design approaches, AESS applications may require engineers and contractors to consider issues that are normally of no consequence in conventional structural steel systems; the orientation of the longitudinal seam of HSS members is an example. Welding issues include weld spatter removal and how weld tabs and backing are to be handled after welding.

14.7.2 AISC AESS Categories

Five categories of AESS are defined in AISC *Code* Section 10.1.1, as follows:

AESS 1: Basic elements

AESS 2: Feature elements viewed at a distance greater than 20 ft (6 m)

AESS 3: Feature elements viewed at a distance less than 20 ft (6 m)

AESS 4: Showcase elements with special surface and edge treatment beyond fabrication

AESS C: Custom elements with characteristics described in the contract documents

AISC *Code* Commentary Section 10.1.1 discusses the nature of these categories as follows:

- Basic elements in AESS 1 are those that have workmanship requirements that exceed what would be done in non-AESS construction.
- Feature elements in AESS 2 and 3 exceed the basic requirements, but the intent is to allow the viewer to see the art of metalworking. AESS 2 is achieved primarily through geometry without finish work, and treats things that can be seen at a larger viewing distance, like enhanced treatment of bolts, welds, connection and fabrication details, and tolerances for gaps, copes and similar details. AESS 3 is achieved through geometry and basic finish work and treats things that can be seen at a closer viewing distance or are subject to touch by the viewer, with welds that are generally smooth but visible. AESS 3 involves the use of a mock-up and acceptance is based upon the approved conditions of the mock-up.
- Showcase elements in AESS 4 are those for which the designer intends that the form is the only feature showing in an element. All welds are ground and filled; edges are ground square and true. All surfaces are filled and sanded to a smoothness that doesn't catch on a cloth or glove. Tolerances of fabricated forms are more stringent—generally half of standard tolerance. AESS 4 involves the use of a mock-up and acceptance is based upon the approved conditions of the mock-up.
- Custom elements in AESS C are those with other requirements defined in the contract documents.

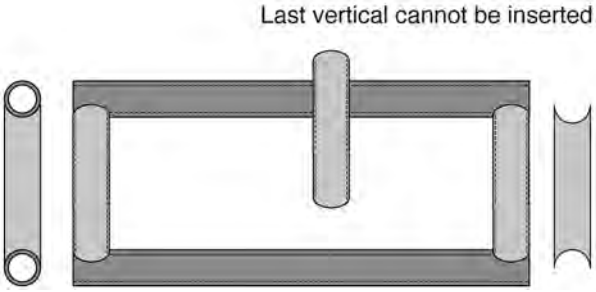

Fig. 14-5. Assembly concerns with round HSS.

The general descriptions of the AESS categories are defined in specific terms in AISC *Code* Table 10.1, which is reproduced here as shown in Figure 14-6.

14.7.3 Specifying AESS

When fabrication and erection to AESS standards is expected, AESS members or components are to be identified in the contract documents. The preceding sentence uses the phrase "members or components" because in some situations, AESS standards may not be required for the whole structure. The specific AESS category should be identified. Any additional requirements beyond those specified in AISC *Code* Table 10.1 must also be specified for AESS Categories 1 through 4. For AESS Category C, specific details must be provided; Table 10.1 can be used as a reference, but Category C may include treatments beyond those listed in the table.

14.7.4 Welding AESS Members

AESS members are ideally welded with processes that produce minimum levels of spatter because spatter must be removed for AESS Categories 1 through 4. Where the steel can be welded in the horizontal or flat position and when the weld is long, automatic submerged arc (SAW) is ideal. For semiautomatic work and for out-of-position work, gas metal arc welding (GMAW) is well suited: spray transfer can be used for horizontal and flat position welds; pulsed spray transfer works well for out-of-position work, as well as for horizontal and flat welding.

AESS often requires the application of coating systems that necessitate careful surface preparations. Two approaches may be taken. The material may be blasted before welding, generating a near ideal surface on which to weld. However, spatter is more likely to stick to such surfaces, and there will likely need to be some after welding cleanup of smoke on the previously cleaned surfaces. Alternately, the assemblies can be fabricated from as-received material (e.g., with mill

TABLE 10.1
AESS Category Matrix

Category		AESS C	AESS 4	AESS 3	AESS 2	AESS 1	SSS
Id	Characteristics	Custom Elements	Showcase Elements	Feature Elements in close view	Feature Elements not in close view	Basic Elements	Standard Structural Steel
1.1	Surface preparation to SSPC-SP 6		•	•	•	•	
1.2	Sharp edges ground smooth		•	•	•	•	
1.3	Continuous weld apprearance		•	•	•	•	
1.4	Standard structural bolts		•	•	•	•	
1.5	Weld spatters removed		•	•	•	•	
2.1	Visual samples		•	•	optional		
2.2	One-half standard fabrication tolerances		•	•	•		
2.3	Fabrication marks not apparent		•	•	•		
2.4	Welds uniform and smooth		•	•	•		
3.1	Mill marks removed		•	•			
3.2	Butt and plug welds ground smooth and filled		•	•			
3.3	HSS weld seam oriented for reduced visibility		•	•			
3.4	Cross sectional abutting surface aligned		•	•			
3.5	Joint gap tolerances minimized		•	•			
3.6	All welded connections		optional	optional			
4.1	HSS seam not apparent		•				
4.2	Welds contoured and blended		•				
4.3	Surfaces filed and sanded		•				
4.4	Weld show-through minimized		•				
C.1							
C.2							
C.3							
C.4							
C.5							

User Note:

1.1 Prior to blast cleaning, grease and oil are removed by solvent cleaning to meet SSPC-SP1.
1.2 Rough surfaces are deburred and ground smooth. Sharp edges resulting from flame cutting, grinding and especially shearing are softened.
1.3 Intermittent welds are made continuous, either with additional welding, caulking or body filler. For corrosive enviro-ments, all joints are seal welded. Seams of hollow structural sections are acceptable as produced.
1.4 All bolt heads in connections are on the same side, as specified, and consistent from one connection to another.
1.5 Weld spatter, slivers, surface discontinuities are removed. Weld projection up to $^1/_{16}$ in. (2 mm) is acceptable for butt and plug welded joints.

2.1 Visual samples are either a 3-D rendering, a physical sample, a first-off inspection, a scaled mock-up or a full-scale mock-up, as specifed in the *contract documents*.
2.2 These tolerances are one-half of those for standard structural steel as specified in this Code.
2.3 Members markings during the fabrication and erection processes are not visible.

3.1 All mill marks are not visible in the finished product.
3.2 Caulking or body filler is acceptable.
3.3 Seams are oriented away from view or as indicated in the *contract documents*.
3.4 The matching of abutting cross sections is required.
3.5 This characteristic is similar to 2.2 above. A clear distance between abutting members of $^1/_8$ in. (3 mm) is required.
3.6 Hidden bolts may be considered.

4.1 HSS seams are treated so they are not apparent.
4.2 In addidtion to a contoured and blended appearance, welded transitions between members also are contoured and blended.
4.3 The steel surface imperfections are filled and sanded.
4.4 Weld show-through on the back side of a welded element can be minimized by hand grinding the back side surface. The degree of weld-through is a function of weld size and material.

C. Aditional characteristics may be added for custom elements.

Fig. 14-6. AESS category matrix (AISC, 2016a).

scale present) and blasted after welding. When this is done, the blasting cleans both the steel and the weld area. The approach chosen may affect the selection of the most appropriate welding processes.

14.7.5 Welded Connection Details

The actual welded connection details to be used on AESS projects will depend on the AESS class and the contract documents. This section is not intended to repeat the welding requirements as listed in the AISC *Code* and cannot list what might be specified in contract documents. The following list is provided to identify the types of welding-related issues that might be applicable to an AESS project that represent a deviation from typical practice for non-AESS projects.

- All weld spatter is to be removed.
- Weld tabs are to be removed.
- Weld backing is to be removed.
- No tack welds are permitted outside the weld joint; any tack welds outside the final weld joint must be removed and ground flush.
- Allowable distortion and other geometric tolerances are more restrictive (half that of non-AESS projects is typical).
- Gaps between members are controlled more tightly.
- Weld reinforcement is required to be removed from groove and plug/slot welds.
- Welds are required to look continuous (i.e., no intermittent welds); to accomplish this, welds may be continuous or gaps between intermittent welds filled to appear continuous.
- Weld faces may be required to be contoured and blended.

The AISC *Code* uses the term *weld show-through*, and for AESS 4, Section 10.4.10 states that "the fabricator shall minimize the weld show-through." Weld show-through is defined in the AISC *Code* Glossary as "in architecturally exposed structural steel, visual indication of the presence of a weld or welds on the side of the member opposite the weld." Weld show-through is a result of the weld shrinkage on one side of a member that becomes apparent on the opposite side. The effect of weld show-through is most obvious on flat surfaces painted with glossy, light-reflecting paint. Application of the distortion control principles contained in Chapter 6 of this Guide can help to mitigate weld show-through, but the most effective means to overcome this problem is to use smaller welds (if the design will permit) or thicker steel for the member where the weld show-through is problematic. The User Note to this section of the AISC *Code* properly states that weld show-through cannot be eliminated where large welds are required on thin members. Mock-ups can be used to determine the required thickness of material to achieve acceptable results.

Weld backing removal is part of the AISC *Code* requirements for AESS Categories 1–4. In many cases, backing removal is easily accomplished, although almost always with a significant cost premium. Double-sided CJP groove welds can be made without backing and accomplish the AESS objective of no backing. Nonfusible backing can also achieve this goal (see Section 4.4.3 of this Guide). For some field welding applications, steel backing removal will necessitate overhead grinding or gouging, followed by overhead welding. Even though required for AESS Categories 1 through 4, this requirement should be carefully evaluated, particularly for field welding applications.

Weld access holes are sometimes required to be filled for AESS projects. If filling is necessary, nonwelding filling methods are preferred over welded options. Weld access holes provide benefits beyond merely providing access for welding (see Section 4.4.2 of this Guide). Nonwelded alternatives include thin plates that can be bolted over the access hole and nonmetallic fillers. The heavier the welds in the area of the weld access holes, the less desirable is the option of filling access holes with weld metal.

In some situations, particularly for field erection, the appearance of a welded connection may be desired, but field bolting may be preferred. In such situations, a shop-welded node can be created to permit field bolting, and the bolted connection covered with a sleeve to give the clean appearance that is desired, as shown in Figure 14-7 (Boulanger and Hughes, 2015).

The tighter geometric tolerances associated with some AESS projects may be challenging, depending on the configuration of the part, the amount of welding and other circumstances surrounding the work. Application of the principles contained in Chapter 7 of this Guide can help control distortion from welding. The equations provided in Section 7.3 can be used to predict whether the AESS tolerances will likely be problematic or not.

14.7.6 Visual Inspection of Welded AESS Connections

As a general principle, the AESS visual quality acceptance criteria should be established with an understanding of the distance the viewer normally will be from the structural member and the welds in particular when the structure is in place. For example, a roof truss 25 ft (7.6 m) above the floor should not be subject to the same weld appearance criteria as the column that supports the truss, when the column is at eye level. The viewing distance is the difference between AESS 2 and AESS 3, with 20 ft (6.1 m) being the crossover point.

AISC *Code* Section 10.1.2 requires mock-ups of the welded components for AESS Categories 3, 4 and C. The Commentary states the following: "Generally, a mock-up is

produced and approved in the shop and subsequently placed in the field. The acceptability of the mock-up can be affected by many factors, including distance of view, lighting, and finishing. The expectations for the location and conditions of the mock-up at time of approval should be defined in the contract documents."

The AESS visual acceptance criteria should not be confused with the normal AWS D1.1 visual acceptance criteria, which should be met for all welds, whether AESS is involved or not.

14.8 SHOP VERSUS FIELD WELDING

Control of welding is always more easily accomplished in the shop, as is true of some other operations such as painting. This does not mean, however, that quality, economical welding cannot be accomplished in the field. Welding in the field can be more economical than bolting, as shown in Section 17.3.8 of this Guide.

Many of the technical challenges associated with field fabrication are related to the environment. Wind, rain, cold temperatures, and dealing with materials that have been exposed to field storage conditions are all inherently related to field welding conditions. Field welding typically requires more out-of-position welding, and access to the joint is usually more awkward. Yet, all of these conditions can be mitigated by good planning and use of proper tools. For example, the use of FCAW-S can eliminate the problems associated with welding in windy conditions. Tents or other enclosures can be used to protect the welder and the joint from the elements. Out-of-position welds can be made easily by a skilled welder using the proper electrode and procedures. Storing staged material on timbers rather than on the ground can do a lot to keep the material clean.

Another challenge associated with field welding is not technical but managerial—it is easier to manage shop work than field work. Shop personnel may be better known to the foreman and may be more familiar with company practices and expectations. Field challenges must be acknowledged and managed.

Field welding is subject to the same AISC *Specification* and AWS D1.1 provisions as is shop welding, including requirements for welder qualification and ongoing inspection by the contractor's inspector (QCI). WPS are subject to all the same prequalification and qualification requirements, regardless of where the welding is performed. Just as AISC has shop certification programs, a similar program exists for field erectors.

14.9 WELDING ON EXISTING STRUCTURES

14.9.1 Introduction

Welding on existing structures may be necessary for a variety of reasons, but it generally falls into one of two categories: modifications to a structure to reconfigure it for different purposes or repairs to a structure to correct for damage. Modifications may be simple additions to existing structures or may involve strengthening the structure to add load-carrying capacity. Repairs may be required due to the effects of overloading caused by natural events such as tornados, earthquakes, or extreme snow events. In other cases,

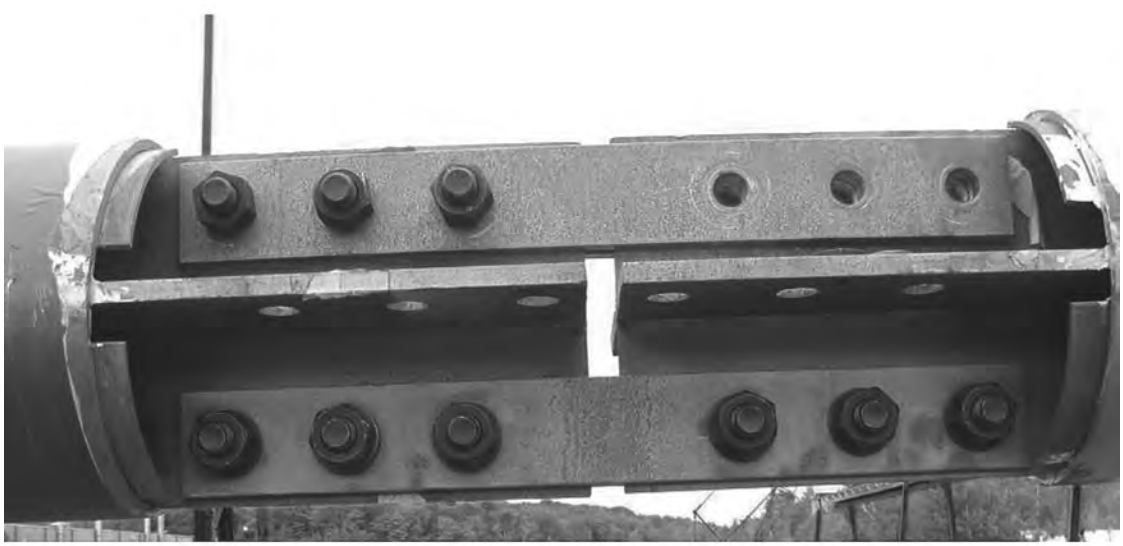

Fig. 14-7. Bolted tubular connection, to be concealed with a sleeve.

repairs may be necessary to correct for fire damage or to replace corroded material.

AWS D1.1, clause 8, deals with the topic of strengthening and repair of existing structures and requires the engineer to "…prepare a comprehensive plan for the work. Such plans shall include, but are not limited to, design, workmanship, inspection, and documentation." The Commentary provides helpful guidance. AWS D1.7, *Guide for Strengthening and Repairing Existing Structures* (AWS, 2010a) was developed to provide additional guidance but not code requirements.

It is critical that the engineer and contractor interact in a cooperative way on strengthening and repair projects. Unusual situations that are not anticipated during the planning stages are often encountered once the project begins. Budgets and schedules should anticipate that the unanticipated will likely arise. Historic drawings may be inaccurate, and the structure may not have been built as designed. Undocumented modifications may be discovered, and other anomalies may be discovered. Recognition of these realities and the cooperative interaction of all the parties involved are critical when such situations arise.

14.9.2 Safety Precautions

Welding on existing structures may pose potential welding hazards distinct from those associated with new construction projects. In addition to the routine measures needed to provide a safe workplace, the following issues should also be considered when working on existing structures.

Structural Stability

In a manner similar to the erection of a new building, an overall plan must be established when work is to be performed on existing structures. This is particularly important when existing members are cut or removed. For severely deformed structures, considerable stored elastic energy may be present in the existing members.

Fire and Explosions

Existing structures are often filled with combustible materials as well as pipes that may contain natural gas or other combustible substances. Flammable plastics for plumbing and electric conduits must be considered when thermal cutting and welding are performed nearby. The sparks from cutting torches and welding operations have created fires on many occasions. Preheating torches are another source of potential problems. Appropriate precautions must be taken to control all potential fire hazards.

The electrical welding work circuit is another potential fire ignition source. It is simple and convenient for a welder to attach the work lead to a building frame member near the welding machine, but welding may occur a significant distance away from the point where the work lead is attached. The welding current must pass through the structure and may assume unanticipated paths, such as through sheet metal duct work, electrical conduit, or electrical wiring. At a point of high electrical resistance, localized heating of the portion of the welding circuit can cause a fire, one that is deeply hidden in the existing structure and away from the welding operations. To overcome this problem, the welding work lead should be attached as close as possible to the point where welding is to be performed.

Ventilation

The erection of a new steel frame is usually performed under conditions where the welding operations are exposed to the elements. Ventilation is rarely a concern for field welding operations. When welding on existing structures, the opposite condition is often experienced: ventilation may be inadequate. Special fume removal equipment and air handling devices may be needed to provide a safe working environment.

Asbestos, Lead-Based Paint and Other Hazardous Material

Rehabilitation projects may involve removing fireproofing, and older fireproofing may contain asbestos. Older structures may have been painted with lead-based paint. Other hazardous materials may be encountered during rehabilitation projects and special measures may be required to protect workers from exposure.

14.9.3 Existing Steel Composition and Condition

Before welding on existing structures, the steel should be investigated to uncover any potential welding problems, particularly when the structure involved is riveted. Section 5.4.5 of this Guide contains a summary of historic steels and their relative weldability.

A check of the chemical composition of one piece of steel in one location cannot be assumed to be representative of all the steel throughout the structure. Multiple heats of steel may have been used, and the steel might have come from multiple suppliers. Multiple grades of steel may have been used.

Steel that was welded in the past is equally weldable today. The primary weldability concern is associated with existing steel that has never been previously welded. Steel that was originally joined by rivets or bolts should not be automatically considered to have poor weldability; rather, it should be viewed as material without known weldability. Many existing riveted structures have been successfully modified using normal welding practices, indicating that the steel had a chemical composition suitable for welding, even though welding was not used for the original fabrication or erection.

The condition of the steel also deserves special mention

with a specific focus on corrosion. Severe section loss due to rusting can create a variety of welding challenges. Heavy rust will directly affect the weld quality and the ability to obtain fusion to the steel. Thin sections may result in melt-through during welding. The pockets formed when rust is removed might result in excessive gaps and fit-up challenges.

For repairs to structures that have been fire-damaged, the steel should be examined to see if the heated steel was damaged in the fire. The damage may come from the heated steel being rapidly cooled by water used to extinguish the fire, which hardens the steel. Steel members that were subject to fire may have buckled or deflected, creating future serviceability problems.

14.9.4 Welding and Cutting on Members under Load

Before any work is performed, particularly if cutting is involved, the loading condition on the structure must be examined, considering both dead and live loads. Although it is often impractical, it is always desirable to remove as much load as possible before work is begun. Thermal cutting on loaded members, particularly in tension regions, must be done with caution; steel members have fractured during such operations. Shoring as a precaution against the unexpected is advisable, particularly when redundant load paths are not certain.

As steel is heated, it loses strength and stiffness, and thus reasonable concerns have been raised regarding how welding will affect structures under load. Two mitigating factors reduce the actual effect of such heating from welding. First, at temperatures up to approximately 650°F (340°C), the reduction in strength and stiffness is negligible (Blodgett, 1966). Secondly, at any given time, only a very small portion of the cross section of the structural element experiences the reduced properties (Tide, 1987).

The orientation of the weld with respect to the stress field is a factor, but rarely a controlling one. When welds are deposited parallel to the stress field, it is only the weld cross-sectional area and a small portion of the surrounding steel that experiences the reduced strength due to the elevated temperature. When welds are perpendicular to the stress field, the area of reduced strength and stiffness is the height of the weld bead plus a small portion of the surrounding steel times the length of the weld that is hot. This length includes the weld pool, which is typically 1.5 to 3 times as long as it is wide, and some length beyond the weld pool. The greater amount of heated metal in this case has prompted the general rule-of-thumb preference for longitudinal welds versus transverse welds when welding on members under load. The actual impact of such differences, however, is typically inconsequential (Ricker, 1987; Tide, 1987); this should be checked for the actual application involved.

14.9.5 Modifications and Additions to Undamaged Steel

For this section, the basic assumption is that the steel is undamaged; it is free of cracks and has not been plastically deformed. In some ways, modification and additions are similar to adding an additional tier on top of a partially erected building, but in other ways, the work is quite different. When welding on an existing structure, the frame is normally more rigid, under load, and has undergone the natural settling that occurs during the life of a structure. Bolted connections, if used, may have slipped and loads may have caused beams to deflect. While the overall project may have unique features that are not associated with new construction, the welding-related factors associated with welding on undamaged steel is essentially the same as welding on a new construction project.

14.9.6 Repair of Plastically Deformed Steel

Steel that has been previously subjected to inelastic deformations, such as due to overload conditions or seismic events, may be required to be welded. When steel is strained in the 5 to 18% range, the yield strength can increase 70%, the tensile strength can increase 35%, the elongation can decrease 30%, and the CVN transition temperature can increase by 65°F (18°C) (Pense, 2004).

In addition to the effects of cold working, welding will compound the effects through a phenomenon called strain aging. When the deformed steel is heated into the range of 500 to 800°F (260 to 430°C) as will happen during welding, the CVN toughness decreases further, typically increasing the CVN transition temperature by an additional 35°F (1.7°C) (Pense, 2004; Stout, 1987). This same region of locally reduced fracture toughness is also the region that will be strained as the weld shrinks, creating residual tensile stresses. Any small notch-like discontinuity in this area can serve to initiate fracture. Fortunately, this zone is in the base metal, away from the weld, and weld discontinuities will not occur in this area. However, discontinuities in the fusion zone are adjacent to the cold-worked region.

Because any cracking from strain aging occurs adjacent to the weld, it has many of the same characteristics of underbead cracking which is in part hydrogen driven. Despite appearance similarities, the mechanisms seem to be different. The nitrogen content of the steel, and specifically the free nitrogen (i.e., the nitrogen that is not chemically combined with other elements, such as aluminum, vanadium, niobium and other nitrogen-binding elements), is a chief contributor to strain aging. Steels that are not fully killed with aluminum are particularly sensitive to strain aging. This would include rimmed steels, semi-killed steels, and silicon-killed steels. Rimmed and semi-killed steels are not commonly produced in 2017 but are present in many existing structures.

Thermal stress relief can help the steel recover from some of the harmful effects of strain, provided that the steel does not experience reheat cracking during stress relief. Reheat cracking can occur when steel contains at least two of the following elements: Cr, Mo, V and B (Bailey, 1994). These elements are present in many structural steels in current use. As an alternative to traditional stress relief, a full normalizing heat treatment that completely reverses the effects of cold working may be applied and eliminate strain aging concerns altogether.

From a practical perspective, existing structures with plastically deformed steel will rarely be stress relieved or normalized. When welding on severely deformed steel results in repeated strain aged cracking, and provided hydrogen has been dismissed as a contributing factor, such material may need to be removed and a new piece of steel inserted and welded in place.

14.10 WELDS AND MECHANICAL FASTENERS

In a variety of conditions, a single joint may incorporate welds and bolts or other mechanical fasteners such as rivets. The typical situation occurs when a mechanically fastened joint needs additional capacity and fillet welds may be contemplated to increase the overall capacity. When bolts and welds are intended to share loads, the deformation capability of the individual elements (i.e., the welds and the bolts) must be considered. The total capacity of the welded and bolted connection cannot be determined by merely adding the capacity of the individual welds and bolts.

The deformation capacity of fillet welds is dependent on the orientation of the weld with respect to the longitudinal axis; longitudinal welds have more deformation capacity as compared to transverse welds. The deformation capacity of mechanically fastened connections depends on the type of fastener (rivet versus bolt), the type of bolted connection (snug-tight joint versus slip-critical connection), whether the bolts are in bearing, the orientation of slot (if used), and other factors. The capacity of a single connection with welds and bolts must consider all of these deformation factors.

In general, welds are more rigid and deform less than mechanically fastened joints; when combined to share loads in a single joint, the more rigid welds will tend to carry most of the load. However, when the deformation capacity of the welds and mechanical fasteners is considered, it is possible to share load under select conditions.

A connection may consist of several joints. For example, a typical column splice that consists of a lapped web plate serving as an erection aid which may be shop welded to the lower strand and field bolted to the upper strand; there are no load-sharing problems with this arrangement because the lap plate-to-lower column is connected with just welds, and the lap plate-to-upper column is connected with only bolts. The concerns about load sharing between bolts and welds do not apply to typical bolted web, welded flange beam-to-column connections, and similar applications (Thomas and Kulak, 1987). However, under seismic conditions, this assumption is probably incorrect; the superior behavior of welded web assemblies versus bolted web alternatives is likely due to differences in deformation capacity. For example, for the prequalified RBS moment connection, or for SMF applications, a welded web is required, whereas for IMF applications, the web may be bolted, as discussed in AISC *Prequalified Connections* Section 5.6. The seismic situation notwithstanding, the general principle is this: if one joint in a connection is bolted and another joint is welded, there is no load sharing between the welds and bolts and there is no concern with differential strain capacity. The concern of strain compatibility occurs when welds and bolts, or other mechanical fasteners, are used in a single joint, and loads are expected to be shared by both the welds and the bolts.

A commonly encountered situation where it may be desirable to share loads between welds and bolts involves retrofit and strengthening work; this could be called old construction. Consider a mechanically fastened truss that is under load. If additional capacity is needed in the connection, welds can be added. The existing bolts can be used to carry the existing loads while the welds must be sized to carry the additional new loads. Regardless of the type of fastener (rivet or bolt), in this case, it can be assumed that whatever slip might occur in the bolted connection has already occurred and no further slip will be a factor. In this case, the weld orientation (longitudinal versus transverse) is immaterial, and deformation compatibility does not need to be checked. This approach for old construction is summarized in AWS D1.1, clause 8.3.7, where, for existing fasteners on existing structures the following is stated: "When design calculations show rivets or bolts will be overstressed by the new total load, only existing dead loads shall be assigned to them." The same clause goes on to mention an exception: "If rivets or bolts are overstressed by dead load alone or are subject to cyclic loading, then sufficient metal and welding shall be added to support the total load."

For new construction, the traditional and conservative approach for joints using welds and bolts was to simply assume the welds will carry the entire load; in this case, the welds must be sized accordingly. This approach for new construction has been supported by AWS D1.1 for years. For example, AWS D1.1:96, clause 2.6.3 (AWS, 1996), stated, "Rivets or bolts used in bearing type connections shall not be considered as sharing the load in combination with welds. Welds, if used, shall be provided to carry the entire load in the connection. However, connections that are welded to one member and riveted or bolted to the other are permitted."

There is a reasonable debate that ensues during construction of a new building—when does new construction become old construction? The issue is not one of time, but rather of

when sufficient loads have been applied to the mechanically fastened joint to allow slip to occur, if indeed slip will occur. The answer to that question depends, in part, on the magnitude of loading that has been applied to the structure.

Between the old construction and new construction extremes are myriad situations where it might be desirable to share loads between welds and bolts, and it is in these situations where deformation compatibility must be considered. The greatest opportunities lie in situations where the weld has the greatest deformation potential (i.e., longitudinal welds) and the mechanically fastened connection has the greatest stiffness (bearing-type connections and slip-critical connections). Further, the proportion of load carried by the welds and the bolts needs to be somewhat balanced.

Various approaches to the topic of load sharing between bolts and welds have been specified by the AISC *Specification* and AWS D1.1 over the years, and the subject is one of ongoing research. In 2016, for new construction, AISC *Specification* Section J1.8 mandated strain compatibility for bolts in combination with welds as follows: "Bolts and welds are prohibited from sharing the load except in shear connections on a common faying surface unless strain compatibility between the bolts and welds is considered." The provision precludes load sharing in all conditions, except for shear connections where strain compatibility is established. No codified means has been developed to establish strain compatibility.

Exceptions to the general prohibition are provided. For new construction, AISC *Specification* Section J1.8 stipulates that it is possible to combine the capacities of bolted and welded connections as follows:

- The bolts are high strength.
- The fillet welds are longitudinal.
- Bolts are installed to the requirements of a slip-critical connection.
- The bolts are pretensioned using turn-of-nut method, and the longitudinal fillet welds have an available strength of not less than 50% of the required strength of the connection, or
- The bolts are pretensioned using any method other than the turn-of-nut method, and the longitudinal fillet welds have an available strength of not less than 70% of the required strength of the connection, or
- The high-strength bolts have an available strength of not less than 33% of the required strength of the connection.
- The strength of the connection need not be taken as less than either the strength of the bolts alone or the strength of the welds alone.

For making welded alterations to structures, load sharing is allowed under these conditions stipulated in AISC *Specification* Section J1.8:

- The fasteners include existing rivets and high-strength bolts.
- High-strength bolts are in standard or short-slotted holes transverse to the direction of load and tightened to the requirements for slip-critical connections.
- The mechanical fasteners are present at the time of alteration.
- The welds need only provide the additional required strength.
- The welds provide no less than 25% of the required strength of the connection.

Under these conditions, unfactored loads may be shared.

14.11 WELDING ON MEMBERS TO BE HOT-DIP GALVANIZED

14.11.1 Introduction

Hot-dip galvanizing is used to protect many exposed steel structures from corrosion. When welded components or assemblies are to be hot-dip galvanized, additional factors must be considered. These factors include the overall design, design details, welding process selection, filler metal selection, and post-galvanizing inspection, as will be discussed in this section. Welding on parts after galvanizing is outside the scope of this section but is addressed in Section 14.2 of this Guide.

Galvanizing is more than a mere coating—the zinc metallurgically bonds to the underlying steel. While in the galvanizing kettle, intermetallic layers form and bond the zinc to the steel. For this reason, the steel must be clean, and the composition of the steel and weld metal will affect the nature of the metallurgical bonds that form.

As is the case for many aspects of steel construction, constructive interaction of all the parties involved with the design and fabrication of steel structures is important; in the case of galvanized welded components, the galvanizer should be added into the interactive group, and if there are architectural concerns about the final appearance of the galvanized component, the architect should be part of the group as well. A competent galvanizer can provide advice regarding many of the issues discussed in this Section. ASTM A385 *Standard Practice for Providing High-Quality Zinc Coatings (Hot-Dip)* (ASTM, 2016) contains helpful information on practices that will enhance the quality of hot dipped galvanized coatings.

Hot-dip galvanizing is a multi-step process involving degreasing, rinsing, pickling (an acid dip), rinsing, fluxing and then dipping the assembly in molten zinc. Post-zinc dipping operations may also be involved. The surface

preparation steps are always important, and for assemblies that are welded, some additional factors related to cleaning should be considered.

Hot-dip galvanizing involves heating and cooling cycles that cause rapid changes in the temperature of the steel, with a corresponding volumetric change in the part being galvanized. The volumetric changes cause strains and stresses that may cause distortion or cracking.

14.11.2 Liquid Metal Assisted Cracking

After welded and unwelded steel members have been galvanized, occasionally cracks are discovered. The cracks may be located in cold-worked areas of the steel (such as on the corners of HSS), on thermally cut steel surfaces (such as weld access holes), at regions containing stress concentrations, or at weld toes.

The mechanism likely to be responsible for cracking that is observed after galvanizing is liquid metal assisted cracking (LMAC), also called liquid metal embrittlement (LME) (Vermeersch et al., 2011). In general terms, LMAC occurs when a normally ductile solid metal that is subject to a residual or applied stress is brought into contact with a liquid metal for a sufficient time such that the liquid metal embrittles the ductile metal. Four factors appear to be responsible for LMAC as it relates to cracking of fabricated steel members that are hot-dip galvanized: force, environment, condition and time (Kinstler, 2005). Force includes factors such as residual stresses (from cold forming steel, flame cutting, or welding), stress concentrators that magnify the force (i.e., notches, weld toes, or the ends of welds), and thermal gradients (from dipping cold steel into hot, molten zinc). Environment includes the specific liquid metal involved, which is primarily zinc, but a variety of other additives may also be present, usually in very small quantities. Condition deals with the variables of the chemical composition and mechanical properties of the steel, where silicon, phosphorous and boron have been identified as problematic; boron is by far the most undesirable alloy addition (Tomoe Corporation, 2001; JIS, 2005). Time refers to the duration over which the steel will be in the galvanizing bath. The precise combination of these four variables necessary for LMAC to occur, or to be avoided, is not known in 2017.

Small additions of other metals are added to zinc to give specific properties to the galvanized finish. These metals include aluminum, lead, nickel, bismuth and tin. The addition of bismuth and tin are considered by some as a key ingredient that increases LMAC problems (Poag and Zervoudis, 2003).

Hydrogen embrittlement can also produce cracking during the galvanizing process; however, it is usually only a concern when steels with $F_y > 100$ ksi (690 MPa) are being galvanized. During the pickling process, hydrogen can be released and enter into the member being prepared for galvanizing, and the absorbed hydrogen has been identified as a potential contributor to cracking. Hydrogen inhibitors can be added to the pickling acid to help control this problem. Heating of steel after pickling but before galvanizing can also be helpful; 300°F (150°C) has been recommended (ASTM, 2014). The heating operation accelerates the release of the diffusible hydrogen.

14.11.3 Global Design Issues

The first global design issue that must be considered is the size of the kettle used for galvanizing. The average kettle length in North America is 40 ft (12 m) and many are in the 50- to 60-ft (15 to 18 m) range (AGA, 2015). It is possible to dip parts longer than the available kettle using progressive dipping procedures, dipping one end at a time. Consultation with the galvanizer on the issues of kettle size and progressive dipping is advisable. In addition to length, the overall mass of the assembly should be considered as the part intended for galvanizing may be heavier than can be handled by the galvanizer. Large or heavy structures can be made of subassemblies that are individually hot-dipped and then assembled. Welding of galvanized subassemblies requires some special considerations (see Section 14.2 of this Guide), and bolted connections of hot dipped members require surface roughening as stipulated in AISC *Specification* Section J3.8.

The overall design of the welded assembly to be hot-dip galvanized must be such that cleaning solutions and the molten zinc are free to contact the surface to be coated. All surfaces of rolled structural shapes without welded attachments will naturally come in contact with the cleaning and galvanizing solutions when immersed. Unwelded HSS members have two open ends, allowing for cleaning solutions and zinc to enter the shape. Welded attachments may inhibit contact of the cleaning solutions with the steel; welds around the perimeter of end plates on HSS create an enclosed cavity. Stiffeners on a wide-flange member will not create an enclosed cavity, but may create pockets that preclude the flow of material into the area or may hold fluid when the part is removed from the liquid. These subjects are considered in detail in the subsequent subsection on venting and drainage.

Ideally, parts to be galvanized will be made of components with similar thicknesses of material. Welding makes it possible to join thick materials to thin, and this flexibility may result in problematic combinations of material thicknesses. The dip in the molten zinc, which is maintained at a temperature of approximately 830°F (440°C), will cause the immersed steel to heat and expand. Thin members will heat and expand more quickly, creating differential straining, which is often concentrated in the welded connection. Distortion can occur, as can cracking in welded connections and elsewhere. Large changes in thickness are sometimes referred to as a thermal mismatch in this context. Thick base

plates on thin-walled transmission towers or luminaries have exhibited cracking, which has been at least partially attributed to thermal mismatch.

Provisions should be made for handling the assembly through the hot-dip galvanizing process. Lifting lugs are helpful and will eliminate chain or wire marks that can result when lugs are not used. Any lifting point should be located to allow for one end of the part to be dipped before the opposite end, as is the typical practice. The potential effect of the lifting lug on the in-service behavior of the structure should be considered, particularly when cyclic loading will be experienced.

Most common steels used for construction can be hot-dipped galvanized, including hot- and cold-rolled steel, steel castings, and weathering steels. The chemical composition of the steel will affect the characteristics of the galvanized coating. The silicon and phosphorous content of the steel will affect the appearance of the galvanized coating. The difference in appearance does not affect the corrosion protection but may create aesthetic problems. The following guidelines can be used for selecting steels that will provide good galvanized coatings (AGA, 2015):

Carbon	< 0.25%
Phosphorus	< 0.04%
Manganese	< 1.35%
Silicon	< 0.04% or 0.15% to 0.22%

The two ranges for silicon content can be understood by studying the Sandelin Curve, which is outside the scope of this discussion but is mentioned because the two suggested ranges may seem to be odd or in error. Steel with very low levels of silicon (<0.04%) will result in normal and appropriate zinc layer thicknesses. When silicon contents exceed 0.04%, the zinc layer quickly increases and becomes irregular in appearance. However, when the silicon content is increased into the 0.15 to 0.22% range, the zinc layer thicknesses return to those associated with steel with silicon contents that are less than 0.04%. This nonlinear behavior is well established and explains why there are two ranges of desirable silicon content.

There are theories that the composition of the steel influences LMAC tendencies (see Section 14.11.8 of this Guide). To mitigate cracking tendencies during galvanizing, a minimum radius of three times the material thickness ($3t$) is recommended by some (AGA, 2015; ASTM, 2014) and a more conservative $5t$ or 1 in. (25 mm), whichever is greater, is required by others (AASHTO, 2016). For sharper radii dimensions, hot bending can be employed, or cold bent members can be stress relieved at 1,100°F (590°C) for 1 hr/in. (25 mm) of thickness (AGA, 2015). In lieu of HSS that have cold-formed corners, fabricated box sections can be made from plate with welded corners, eliminating the concern of cold-worked material.

14.11.4 Drain and Venting Requirements

The degreasers, pickling solutions, rinse agents, flux and molten zinc used at different stages of the hot-dip galvanizing process must be exposed to all surfaces to create a uniform coating. To accomplish this, parts must be designed so that cleaning solutions and molten zinc can flow into, over, through and out of the part to be galvanized. Vents must be supplied to release air that might otherwise be trapped in the assembly, and if so, that would preclude the flow of liquids into the cavity. When the part is dipped, vents need to be high and drains need to be low. AISC *Specification* Section M2.11 requires consideration of vents and drains. When zinc is unable to flow out of portions of the assembly, structural members may be damaged when they are lifted from the galvanizing kettle because they may weigh far more than expected.

Two basic methods are used to create vents and drains: snipes at corners of intersecting members (such as gussets) and drilled holes. A snipe should be at least ¾ in. (19 mm) in size and a hole should be at least ½ in. (13 mm) in diameter (AGA, 2015). Overlapped members require special consideration for vents and drains; this specialized situation is discussed in Section 14.11.7 of this Guide.

14.11.5 Distortion Issues

Parts may distort during the hot-dip galvanizing process. Two factors come into play; first, the expansion of some but not all of the components in an assembly may induce distortion. Second, for welded assemblies, the elevated temperatures of galvanizing may cause parts to move as residual stresses are relaxed to some extent. The following guidelines may be helpful in reducing distortion during galvanizing (AGA, 2015):

- Use symmetrical sections. I-shapes are preferred to angles and channels.
- Use parts with similar thicknesses, particularly at connections.
- Stiffen the part to resist distortion, either with temporary or permanent members.
- Avoid designs that require progressive-dip galvanizing.

ASTM A384 *Standard Practice for Safeguarding Against Warpage and Distortion During Hot-Dip Galvanizing of Steel Assemblies* (ASTM, 2016) contains helpful suggestions on how to avoid distortion during galvanizing and, as applicable, the distortion control principles discussed in Chapter 7 of this Guide can be used as well.

14.11.6 Welding Issues

Two issues directly related to welding need to be considered for parts that are to be hot-dip galvanized: cleanliness and

Table 14-2. Filler Metals from AGA Available in 2017			
Welding Process	**AWS Classification**	**Trade Name**	**Silicon Content**
SMAW	E7027	Jetweld 2	0.30%
	E6011	Fleetweld 35 LS	0.11%
	E6012	Fleetweld 7	0.33%
SAW	F7A2-EM12K	L61-860	0.34%[a]
FCAW-S	E70T-7	NR 311	0.07%

[a] The American Galvanizers Association document, "Welding & Hot-Dip Galvanizing," incorrectly reports this value as 3.40%. This table was adapted from the AGA document (AGA, 2009).

chemical composition. The importance of steel cleanliness for effective galvanizing has been discussed; welding may increase the challenges associated with cleaning. The aforementioned issues of base metal chemical composition and the role of silicon, in particular, also applies to deposited weld metal.

The multi-step cleaning process (i.e., degreasing, pickling and fluxing) is adequate to clean most steel assemblies prior to galvanizing. However, it will not remove slag that may be present on welds and may not remove residual smoke on the surface from welding. Materials on the surface of the steel before welding, whether added deliberately or accidentally, may be baked in by the heat of welding; a notable example is the varnish coating often applied to round HSS. In some situations, mechanical means (e.g., wire brushing or shot blasting) may be necessary to remove coating materials that have been baked on by welding. Alternately, such materials can be removed prior to welding.

Welding processes that leave behind a relatively clean welding surface, such as GMAW or SAW are often preferred for assemblies that will be galvanized. On the surface of GMAW welds, so-called silicon islands may form; these should be chipped off after welding because they are unlikely to be removed by the typical chemical cleaning process.

Excessive silicon content in the weld metal can affect the thickness of the zinc layer on the weld surface, with a corresponding effect on the appearance of the galvanized weld. Many AWS classifications allow weld metal to contain 1.0% silicon. The specific silicon content of a weld deposit depends to some extent on the specific filler metal manufacturer, not simply the AWS filler metal classification. The American Galvanizer's Association (AGA) lists several filler metals that have been tested and found to be acceptable; the AGA list includes some materials that are no longer commercially available. Table 14-2 is a subset of the AGA list, showing filler metals available in 2017.

Other filler metals are likely to be acceptable but test results have not been published. The data in the table suggest that silicon contents of less than about 0.35% will provide acceptable results.

14.11.7 Connection Details

The snipes that are routinely supplied at intersecting corners of gussets and stiffeners naturally provide vents and drains for galvanizing as shown in Figure 14-8. Intersecting members that contain weld access holes may similarly provide natural vents or drains.

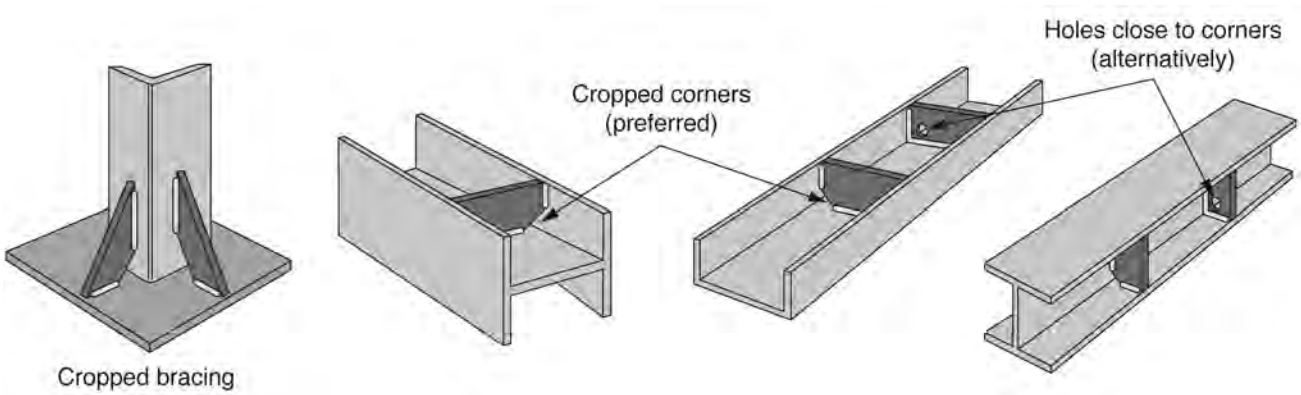

Fig. 14-8. Snipped corners and holes allow for drainage.

Table 14-3. Venting Sizes for Tightly Overlapped Surfaces				
	Steel Thickness ≤ ½ in. (13 mm)		Steel Thickness > ½ in. (13 mm)	
Overlapped Area	Vent Holes	Unwelded Length	Vent Holes	Unwelded Length
≤16 in.^{2} (10 000 mm^2)	None	None	None	None
16 to ≤ 64 in.^{2} (10 000 to < 41 000 mm^2)	One ⅜ in. (10 mm)	1 in. (25 mm)	None	None
64 to ≤ 400 in.^{2} (41 000 to ≤ 260 000 mm^2)	One ½ in. (13 mm)	2 in. (50 mm)	One ½ in. (13 mm)	2 in. (50 mm)
400 in.^{2} and greater, and each additional 400 in.^{2} (260 000 mm^2 and greater, and each additional 260 000 mm^2)	One ¾ in. (18 mm)	4 in. (100 mm)	One ¾ in. (18 mm)	4 in. (100 mm)
Adapted from AGA Design Guide (AGA, 2015) and ASTM A385 (ASTM, 2016).				

AISC *Specification* Section M2.2 and AWS D1.1, clause 5.16.2, recommend that thermally cut weld access holes and copes that will be hot-dip galvanized should be ground to bright metal. Some have suggested buttering these surfaces (AGA, 2015), but economics suggest grinding to be a lower cost solution.

Overlapping and contacting surfaces require special attention when the assembly will be hot-dipped galvanized. It is generally preferred to avoid geometries that create narrow gaps such as back-to-back angles and channels or overlapping plates. Larger gaps can be deliberately incorporated into the design, perhaps by the means of spacers. Lap joints in some cases can be replaced with butt splices.

When gaps between surfaces are 3⁄32 in. (2.5 mm) or less, molten zinc will not flow into the space, but cleaning solutions will. When dipped in zinc, the residual cleaning solutions may rapidly convert to steam or other gases, creating a safety problem for workers and leaving uncoated spots on the steel. If cleaning acids remain in tight enclosures, hydrogen-related cracking can occur in the part. Accordingly, it may be appropriate to seal overlapping members with welds. However, additional considerations beyond specifying seal welds should be taken into account.

It is difficult to completely seal joints by welding. Small fusion discontinuities, particularly at points where welds intersect, are common. Weld porosity may preclude complete sealing of the joint. Any compromise of a perimeter seal weld may allow cleaning solution to enter into the overlapped region, and the problem of vaporization of remaining liquids during dipping again becomes a potential problem. Thus, two solutions are suggested to address this situation: vent holes can be provided, or a portion of the perimeter seam can be left unwelded. Table 14-3 provides recommended dimensions for these solutions.

14.11.8 Additional Measures to Mitigate Cracking

The infrequent nature of the cracking that occasionally occurs during galvanizing has made it difficult to study the conditions associated with such cracking and a complete understanding of how to avoid it is still unknown as of 2017. Generally accepted practices have been discussed in the preceding subsections. The following are ideas that have been suggested that have not been incorporated into U.S. standards or the AGA recommendations:

- Japanese standards include a CE_Z equation that quantitatively evaluates the effect of various base metal compositional elements. CE_Z is determined with the following equation.

$$CE_Z = C + \frac{Si}{17} + \frac{Mn}{7.5} + \frac{Cu}{13} + \frac{Ni}{17} + \frac{V}{1.5} + \frac{Nb}{2} + \frac{Ti}{4.5} + \frac{Cr}{4.5} + \frac{Mo}{3} + 420B \le 0.44\% \quad (14\text{-}1)$$

Lower values are deemed desirable, and 0.44% is recommended as a maximum level (JIS, 2005).

- Additional preheat and limited heat input procedures appear to be helpful; these measures are likely to reduce the residual stresses of welding.
- The galvanizer's practices can affect the tendency of LMAC to occur, including time in the acid bath, dipping speeds into the molten zinc, dipping angles (because of the effect on differential expansion), alloy additions to the zinc, and time in the galvanizing kettle.

14.11.9 Inspection of Galvanized Steel

Exposed cut surfaces of galvanized steel main members and exposed corners of rectangular HSS are required to be visually inspected for cracks after galvanizing by AISC *Specification* Section N12.7. Because it is common for steel to be fabricated, shipped to the galvanizer, and then shipped to the jobsite, this inspection is often performed at the jobsite.

In addition to the mandated inspections of exposed cut surfaces and exposed corners of rectangular HSS, random visual examination of weld toes and weld termination points is suggested as these too have been locations where cracks have appeared after galvanizing.

14.12 COLD TEMPERATURE APPLICATIONS

14.12.1 Introduction

The general topic of welded connections and cold temperature applications has two major subsets: welding in cold temperatures and the performance of welded structures in cold temperatures. Both subjects are discussed in this section.

14.12.2 Welding in Cold Temperatures

Steel structures may be required to be constructed by welding when the ambient conditions are cold. Numerous construction challenges exist, but the most significant involve the welders performing the work. As will be discussed, the other challenges associated with cold temperature construction can be managed more easily than those associated with the welders themselves. "Many welding engineers in Finland are of the opinion that the only limiting factor is the human factor, namely the welder, and due to this the difficulties begin at around −15°C (5°F)" (Valanti, 1970).

Welders must be provided with clothing that is warm, yet fire-resistant. The same insulating clothing must permit sufficient freedom of movement that allows welders to safely perform their tasks while they deposit quality weld metal. One of the greater challenges is associated with keeping the lens in the welder's hood from fogging and freezing.

Sometimes, protective shelters or tents are erected around the point of welding and the enclosed area heated. Flame-resistant materials must be used for such enclosures. On one level, it may seem desirable to seal such shelters as much as possible in order to keep the area warm. However, because fume is generated during welding, the welder must be protected against the accumulation of fume within the enclosure and adequate ventilation for the welder is still required.

There are practical concerns associated with the welding operations too, such as making sure diesel and even gasoline engines that power welder generators will start and operate at low temperatures. The lubricants in some wire feeder gearboxes may become so thick as to make the wire feeder unusable. Under low temperature conditions, the fuel gas of acetylene that may be used for thermal cutting or preheating does not release as rapidly from the acetone in which it is dissolved.

The deposition of weld metal on steel is perhaps the least of the concerns associated with low temperature welding; when the steel is properly preheated, the localized weld cooling rates are not much different than when welding is done at normal ambient temperatures. However, the steel must be preheated properly and perhaps more extensively and to a higher temperature than normally required.

Welding on steel that is not preheated, however, is a much different situation. Cold steel may be coated with frost or ice, and the steel itself may have significantly lower fracture toughness than is the case at normal temperatures (see discussion on this topic in the next section as well). Generous preheating will overcome concerns about condensation of moisture on the surface of the steel and will also offset increased cooling rates due to the colder surrounding air.

A variety of rules applicable to welding in low ambient temperature conditions are included in AWS D1.1, clause 5.11.2, including the following:

- Welding is not to be performed when the ambient temperature is lower than 0°F (−20°C). The ambient temperature in this case is not the environmental temperature, but rather the temperature in the immediate vicinity of the welds. A heated shelter around the point of welding can be used to raise the temperature in the immediate vicinity of the welds to a temperature above 0°F (−20°C).
- Welding is not to be performed on surfaces that are wet or exposed to rain or snow.
- Welding is not to be performed when welding personnel are exposed to inclement conditions.

On the topic of preheat, there are some specific requirements applicable to cold temperature situations. For prequalified WPS and where the preheat temperature is 32°F (0°C), if the ambient temperature is lower than this value, AWS D1.1, Table 3.3, Note a, then requires the steel to be preheated to 70°F (20°C).

14.12.3 Steel Structures in Cold Temperatures

Steel structures are located in every climatic zone of the world, including regions where very low temperatures are routinely experienced. In general, such structures are heated for the comfort of the inhabitants, and the steel members within those heated structures are usually at room temperature when in service. Some heated structures have structural frames that are exposed to ambient temperatures. Structures such as some aircraft hangers and warehouses may be unheated, or maintained at a lower ambient condition than would be associated with normal office buildings. The steel in bridges is subject to ambient temperature exposure, as is

also the case with the steel in a variety of nonbuilding structures such as sign structures and luminaries.

The concern associated with low temperature applications is one of brittle fracture, the topic of Chapter 13 of this Guide. Brittle fracture can occur at room temperatures under some conditions, but as the temperature of steel decreases, the fracture toughness of steel diminishes abruptly, as illustrated in Figure 14-9. Thus, structures exposed to low temperatures are more sensitive to brittle facture.

The temperature at which the energy to fracture these specimen moves from a high level (upper shelf) to a lower level (lower shelf) is called the transition temperature. Steel structures operating at temperatures above the transition temperature will exhibit significantly greater resistance to fracture than structures operating below the transition temperature, all other factors being equal. This is a simplification; other factors, including loading rates and the so-called temperature shift, may permit steel structures to operate below the transition temperature yet still have good resistance to brittle fracture. Nevertheless, a steel structure that is subject to cold temperatures will be more fracture-prone than the same structure exposed to more moderate temperatures.

To ensure structural steel and weld metal with acceptable levels of fracture toughness, the material should be capable of absorbing a minimum level of energy, typically measured in ft-lb (J) at a given temperature, when tested by means of the CVN impact specimen. This standardized testing methodology permits easy and relatively low-cost screening of materials, although it involves some compromises when converted for use in fracture mechanics analysis. While most structural steels are normally supplied without specified minimum CVN properties, many filler metals are available with classifications that mandate minimum CVN properties.

Concerns about low temperature performance of structures increase when the applied loads are cyclic, impactive or seismic. Cyclic loads may result in crack initiation and propagation. A structure with a preexisting crack is less resistant to brittle fracture than a crack-free structure. See Section 13.8 of this Guide. Impactive loading adds additional challenges to the performance of structures at lower temperatures. Fracture resistance is strain rate sensitive; steel offers less resistance to fracture when loaded rapidly. Additionally, impactive loads create greater forces than slowly applied loads. In seismically loaded structures, the inelastic behavior of steel at low temperatures may be different than the room temperature behavior.

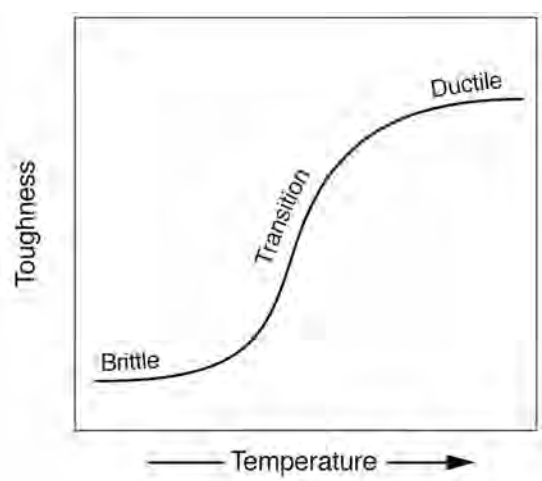

Fig. 14-9. Representative steel toughness transition curve.

The principles presented in Chapter 13 of this Guide are generally applicable to cold temperature applications and are not repeated here.

For low-temperature fracture concerns, higher-strength steel will have a reduced temperature shift and will probably be loaded to higher stress levels, which will in turn increase brittle fracture concerns. "For everyday cold temperature use, low carbon steels should be considered. They are commonly available, low in price, and generally have a lower 15 ft-lb_f transition temperature than many of the higher alloy steels. Unless there is a need for some other quality (such as corrosion resistance) offered by higher alloy steels, the common low-carbon steels are often the better economic choice for low temperature service" (McFadden and Bennett, 1991). ASTM A709 HPS steels with defined CVN toughness properties may be good choices for low temperature service.

14.13 DECK WELDING

14.13.1 Introduction

Roof and floor decks are often joined to the supporting steel by means of arc spot welds, which are discussed in Section 4.4.1 of this Guide. Arc spot welds are often called puddle welds or deck welds. Because of the popularity of the term as used in the decking industry, the term *puddle weld* will be used in this section.

When the deck is attached to the steel frame, it serves several purposes: it functions as a work platform for further construction, it stabilizes the frame, it becomes a form when the concrete slab is poured, and finally it becomes part of the structural system in service (SDI, 2006). Puddle welds also perform the practical function of keeping the decking from blowing off the building during construction.

AWS D1.3 (AWS, 2008) contains requirements for sheet steel welding applications, including design criteria for puddle welds.

The Steel Deck Institute (SDI) produces helpful documents on decking issues, including deck welding. Further information can be obtained from www.sdi.org. Included in the SDI documents are recommended patterns for weld placement (SDI, 2006).

14.13.2 Design Capacity of Puddle Welds

AWS D1.3 contains equations to determine the strength of puddle welds in shear as well as uplift. During construction, puddle welds keep the decking from being lifted by the wind and, thus, see tensile loading. In service, the loading of concern is shear. The shear equations require considering two limit states: (1) the capacity of the sheet steel around the circumference of the weld; and (2) shear between the weld and the supporting steel. AWS D1.3, clause 1.2.3, assumes the use of sheet steels where $F_y \leq 80$ ksi (550 MPa).

For puddle welds, there are three diameters of interest: the visible diameter of the puddle weld, d, the average diameter, d_a, and the effective diameter, d_e, as illustrated in Figure 14-10.

As the puddle weld penetrates into and through the sheet or sheets of steel, the diameter of the fused metal will decrease. A further decrease is observed in the diameter of the fused weld metal to the supporting steel. As seen in Figure 14-10, the dimension, t, is total thickness of the ply or plies of steel through which the weld is made. Thus, for one sheet of steel, t is simply the thickness of the one ply, but when two plies are involved, $t = t_1 + t_2$. AWS 1.3, clause 1.5.4, restricts the value for t to a maximum value of 0.15 in. (3.7 mm).

The thickness of galvanized coatings on the sheet steel should be deducted from the actual sheet steel thickness, as only the thickness of the steel is used in these calculations. In the absence of better data, 0.0015 in. (0.04 mm) should be deducted from the thickness of the galvanized steel to account for the coating thickness as discussed in AWS D1.3, Commentary Section C-2.2.4.

When welding through one ply, the average diameter, d_a, can be determined as follows:

$$d_a = d - t \tag{14-2}$$

where

d = visible diameter of puddle weld, in. (mm)

t = thickness of one ply of material, in. (mm)

When welding through two plies, the average diameter can be determined as follows:

$$d_a = d - 2t \tag{14-3}$$

where

$t = t_1 + t_2$, in. (mm)

If $t_1 = t_2$ (as will be the common situation), then for the two-ply situation, the average diameter is as follows:

$$d_a = d - 4t_1 \tag{14-4}$$

The larger reduction in the average diameter, d_a, when welding through two sheets of steel is the result of the decrease in heat transfer that occurs at the interface of the two plies of material.

The effective diameter, d_e, for both single and two ply situations is computed as shown in AWS D1.3, Figure 2.4, and as follows:

$$d_e = 0.7d - 1.5t \tag{14-5}$$

AWS D1.3, clause 2, Part A, permits the use of larger average diameter values as compared to the computed values when sectioned samples of welds made with specific WPS demonstrate that consistently larger values of d_a are obtained. No allowance is provided to increase the effective diameter, d_e, by such tests.

The perimeter capacity of the sheet steel is governed by one of three equations, based upon the average diameter, d_a, the F_u of the sheet steel, and the thickness, t. The three equations reflect different failures modes that are possible. As the thickness, t, becomes smaller, the steel surrounding the puddle weld on the compression side tends to buckle and cause localized tearing to initiate; these welds have restricted capacity as a result.

AWS D1.3, clause 2.2.4, specifies that the available strength of the fused weld metal is based upon the effective diameter, d_e, and the electrode classification tensile strength (designated as F_{EXX}), as follows:

$$P = \frac{d_e{}^2 F_{EXX}}{4} \tag{14-6}$$

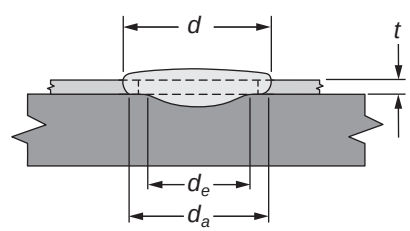

Single thickness of sheet
(a)

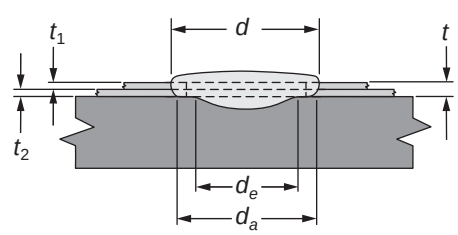

Double thickness of sheet
(b)

Fig. 14-10. Arc spot welds showing d, d_a *and* d_e.

The preceding equation appears to be missing a factor π, normally associated with an area, but also missing is an allowable stress factor (i.e., 30% of the electrode classification tensile strength). Because $0.30 \times \pi$ is approximately 1, these two terms are not included.

For the constraints imposed by AWS D1.3, the capacity of puddle welds is limited by the capacity of the perimeter steel around the weld, not the fused area of the weld, even when E60 (E410) filler metal is used. This is due to the requirement that the minimum value for d_e is ⅜ in. (9 mm) and that equations are supplied only for up to two-ply applications, as well as a requirement that the F_y of the steel not exceed 80 ksi (550 MPa).

Two-ply puddle welds are required where two sheets of decking overlap; these conditions occur along intersecting edges of decking. When corners of decking overlap, a four-ply condition is created—AWS D1.3 does not provide criteria for this condition and making puddle welds that fuse through four plies can be difficult.

14.13.3 Puddle Welding Technique

The contractor installing the metal decking is responsible for the selection of the welding process to be used, development of WPS, and then using proper welding techniques that result in quality welds. General practices are discussed herein.

Due to the flexibility, simplicity and portability of the equipment associated with SMAW, it is routinely the process of choice for puddle welding. Welding current (amperage) is set at the welding machine, and the welder regulates the amount of time necessary to make the weld, which will typically take 3 to 6 seconds. Puddle welds are made with a circular travel path around the perimeter of the weld; when the circle is completed, the puddle is carried to the center of the circle and then the arc is stopped by withdrawing the electrode from the puddle, as shown in Figure 14-11.

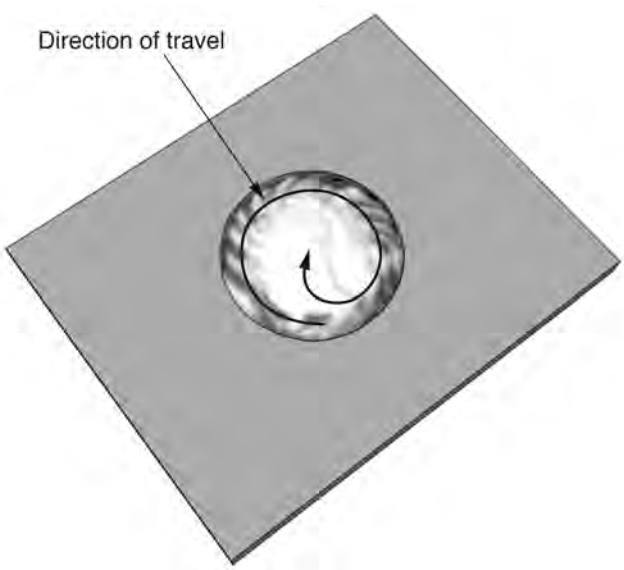

Fig. 14-11. Path of travel for depositing an arc spot weld.

Quality puddle welds depend on close contact between the steel decking and the supporting steel. The transfer of thermal energy from the electrode, through the sheet steel, and into the supporting steel is dependent on good contact. Gaps between the members will cause liquid weld metal to flow into unintended voids and inhibit proper fusion. In most cases, the weight of the welder on top of the decking is sufficient to bring about the required contact.

Decking may be supported by steel joists. The narrow chords of joists make it more difficult to know where welds need to be placed. Also, because the cross section of joist chords is typically small, it is important that puddle welding not damage the joist chord. A chalk line struck on the decking that is over the joist chord can eliminate location problems.

14.13.4 Interaction of AWS D1.1 and AWS D1.3

Sheet steel welding is governed by AWS D1.3, whereas structural steel welding is covered by AWS D1.1; the puddle welds that join sheet steel to structural steel are addressed in the two codes in ways that can cause confusion. AWS D1.3, Table 1.1 and Annex A, were created to address these concerns. Several interactive issues create ongoing confusion, including the issues of preheat and acceptable electrodes; these topics are separately addressed in the following sections.

14.13.5 Welding Procedure Specifications

AWS D1.3 allows for the use of prequalified WPS as well as WPS that are qualified by test. However, puddle welding procedures must be qualified by test according to AWS D1.3, clause 4.6.4. Fortunately, WPS qualification is simple, consisting of a mocked-up joint that is destructively tested by twisting of the assembly.

AWS D1.3, clause 4.6.5.2, requires a separate WPS qualification test for single versus double sheet steel to supporting steel WPS.

14.13.6 Acceptable Filler Metals

AWS D1.3, Table 1.2, lists matching strength filler metals for various steels, while clause 1.4.2 allows the use of other base metal/filler metal combinations when approved by the engineer. The same clause states that when base metals of different grades are welded, the filler metal tensile strength must be greater than the lowest tensile strength base metal. Because most sheet steels are 33-ksi (230 MPa) yield strength

steels with a specified minimum tensile strength that is typically less than 50 ksi (345 MPa), then E60 (410 MPa) filler metal is normally matching strength.

Puddle welds are often made with SMAW because of its simplicity and portability. The filler metal of choice is often an E6022 electrode, sometimes called deck rod. Two features make this electrode well suited for puddle welds—it restrikes easily, a desirable feature because several welds will be made with each electrode, and it has deep penetration capability, essential for melting through the sheet steel. The suitability of the 60-ksi (410 MPa) electrode classification tensile strength and the non-low-hydrogen nature of the product have become a point of discussion, particularly with the introduction of ASTM A992, as will be discussed.

Puddle welds do not inherently require the use of matching filler metal to gain their necessary strength; when the capacity of the fused metal is calculated, whatever electrode strength is used can be inserted into the equation to determine this capacity (see AWS D1.3, clause 2.2.4). Thus, E60 may be used for puddle welds on Grade 50 (Grade 345) steels such as ASTM A992, even though a matching strength electrode per AWS D1.1 would require E70. However, for the plug welds covered in AWS D1.1, matching filler metal strength is not required (AWS D1.1, Table 2.3). As discussed in Section 14.13.2 of this Guide, within the constraints of AWS D1.3, the use of E60 (E410) filler metal does not reduce the computed strength of puddle welds; the capacity of the steel surrounding the weld is more restrictive than the fused area of weld to the supporting steel.

The second issue associated with the use of E60 is the non-low-hydrogen nature of this particular electrode. AWS D1.3, Table 1.2, contains a note that says "low-hydrogen electrodes shall be used when required by AWS D1.1." AWS D1.1, in turn, requires low-hydrogen electrodes for certain steels when prequalified WPS are used. Because puddle welding WPS are qualified by test, this requirement does not apply.

14.13.7 Preheat

After sheet steel decking is in place, it is essentially impossible, and certainly impractical, to preheat the supporting structural steel under the decking. Fortunately, the circumstances associated with puddle welds are such that the preheat normally required for traditional welding is not needed. Puddle welding involves concentrated energy in one small area, resulting in slower cooling rates. Further, puddle welds are made under low restraint conditions.

As discussed in Section 14.13.5 of this Guide, WPS for making puddle welds require WPS qualification. For WPS qualified with a preheat temperature of 100°F (38°C) or lower, production welding at 32°F (0°C) is permitted. Also, if the welding amperage setting is increased by 15% or the welding time increased by 30%, AWS D1.3, clause 5.4.1, permits production welding to be performed at 0°F (−18°C), providing low-hydrogen electrodes are used.

14.13.8 Melting Rates

Melting rate is defined in AWS D1.3, Annex D, as "the length of electrode melted in one minute." The term is uniquely used in conjunction with the SMAW process and was a convenient way to control welding current, particularly when measuring devices are not available. This method of welding procedure control is largely obsolete but is provided as a means of control in AWS D1.3 and with some underlying logic when the method is understood. AWS D1.3, clause 4.6.4.4, requires the use of melting rates to control welding parameters.

Melting rates are determined by welding with a covered SMAW electrode for a given length of time, measuring the length of electrode consumed, and then dividing the melted length by the time. For example, an electrode can be struck and used for 15 seconds, or 0.25 minute. The length of the partially used electrode is compared to a fresh electrode to determine how much was melted. If, for example, 3.5 in. (87 mm) of electrode was melted, then the melting rate is 3.5/0.25 or 14 in./min (87/0.25 or 350 mm/min).

When a melting rate is determined to be appropriate for a given application, the same conditions can be easily established by another welder by replicating the aforementioned procedure. If initial attempts to replicate the melting rate results in measured values that are higher than the target value, the test is repeated with a lower current.

For puddle welding, the time associated with making the weld becomes a subconscious variable the welder controls. The combination of melting rates measured in terms of electrode length per time and arc time result in a controlled amount of weld metal being deposited per weld.

For low temperature welding (see Section 14.13.7 of this Guide), increases in melting rate can be used to offset the influence of lower temperatures.

14.13.9 Welding Washers

Welding washers (or simply weld washers) are small pieces of sheet steel with a punched hole in the center, often with a curved end to fit into the valleys of deck panels. Washers are made in different thicknesses with different hole diameters. A common type is 0.06 in. (1.5 mm) thick with a hole of ⅜ in. (10 mm) and may be designated as a ⅜ in. × 16 washer, where the 16 refers to the gage thickness. Weld washers are placed on the decking, an arc is struck inside the hole, and the hole is filled with weld metal. The washer acts as a heat sink, helps control melting away of the edge of the puddle weld, and then retains the weld puddle. Welding washers are particularly helpful when making puddle welds on thin sheet steel and are recommended for welding on sheet steel that

is less than 0.028 in. (0.7 mm) thick (SDI, 2006). After the weld is complete, weld washers are left in place.

14.13.10 Preliminary Weld Quality Check

While not required by AWS D1.3, SDI recommends a preliminary check of welding settings and operator skills in conjunction with the first weld that is made. As shown in Figure 14-12, two welds are placed in adjacent valleys on one end of a sheet steel panel. The opposite end can then be rotated, which causes the welds to be subject to a shearing action. Should the weld on the surrounding sheet steel remain intact, but shear from the supporting steel, there is a likely deficiency in the welding procedure or technique being used; either more welding current or more time is likely needed. Distress in the steel surrounding the weld with a weld that remains attached to both the supporting steel and the sheet steel is indicative of a good weld. After testing, the remaining puddle welds can be installed using the same procedure and technique with confidence in the weld quality.

14.13.11 Post-Weld Conditioning

Sheet steel decking is normally supplied with some type of corrosion resistant surface, often primed or galvanized. After puddle welding, the coating around the perimeter of the weld will be damaged. Normally, when the decking is not exposed to the elements, no post-weld conditioning (i.e., recoating) of the weld is done (SDI, 2006). If post-weld conditioning is required, this should be specified in the contract documents.

14.14 WELDING ON IN-PLACE EMBED PLATES

14.14.1 General

There are many locations where structural steel must be joined to concrete. Frequently, this interface is accomplished with an embed plate—a steel member that is embedded into surrounding concrete. The concrete portion may be a precast member, or possibly a cast-in-place concrete wall or core. The embedded plate may be used as a connection point for supporting or bracing structural steel, and it may be necessary to join the structural steel to the steel embed plate by welding. In extreme situations, problems have been reported when welding embedded plates, but more commonly, the biggest concern with this application is the lack of specific information as to how such situations should be handled.

The embed plate itself is typically shop welded. The concrete anchorage may be provided by shear studs (see Section 14.1 of this Guide) or may involve reinforcing steel that is welded to the embed plate (see Section 1.3.4 of this Guide). The welding of embeds before they are installed in the concrete pose no unique challenges.

The challenges of welding on steel embeds that are in concrete are due to the heat associated with arc welding, and the differences in the response to the changes in temperature between steel and concrete. With differences in the properties of thermal conductivity and thermal expansion, the result is differential straining between the materials. The thermal conductivity of concrete is only about 2% of that of steel; therefore, significant heat buildup can occur in the concrete. A misconception is that the concrete acts as a large heatsink for the steel. The difference in thermal conductivity shows that the heat being conducted through the steel occurs faster than the heat being pulled away by the concrete. Concerns have been expressed about uncured (wet) concrete exploding during welding on embed plates. The integrity of the anchorage, distortion of the embed plate, and cracking of the concrete surrounding the embed are all issues that have been raised in the past.

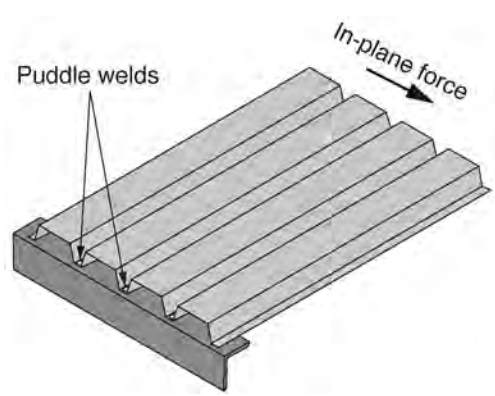

Fig. 14-12. Test procedure for checking puddle welds.

14.14.2 Generation of Heat

In testing performed at the Lincoln Electric Company, when a ¼-in. (6 mm) fillet weld was deposited with SMAW welding with a vertical up progression, the backside of a ⅜-in. (10 mm) steel plate (not embedded in concrete) reached temperatures in excess of 950°F (510°C); the backside is the side of the steel that would normally be in contact with the concrete. When the same weld was made on a ½-in. (13 mm) plate, the peak temperatures were reduced, but still reached levels in excess of 800°F (430°C)

The ¼-in. (6 mm) weld size was chosen because it represents the smallest practical weld size that can be made under most field conditions. Larger weld sizes will generate more heat and higher peak temperatures. The lower peak temperature recorded on the thicker plate is indicative of a desirable trend—thicker plates will result in a reduced peak temperature experienced by the concrete.

Tests conducted on 1³⁄₁₆-in.- (30 mm) thick plate embedded in concrete revealed that the temperature on the back side of a plate did not exceed 465°F (240°C). The girder plates were connected to the steel embed with CJP groove

welds utilizing a 45° bevel. The preheat used was a fairly high 390°F (200°C). The authors concluded damage to the concrete was unlikely under such circumstances (Klimpel et al., 2000).

The use of thicker embed places will logically reduce the peak temperatures that will be experienced by the concrete. However, thicker steel of certain grades may require preheat, negating the benefits of thicker material. Selecting steels of a grade and thickness that do not require preheat is advisable. The use of controlled hydrogen welding processes may preclude the need for preheat in some situations.

If multiple passes are required, or when welds are localized in one area of the embed, allowing the plate to cool between welds will avoid unnecessary accumulation of localized heat. Allowing the welds to cool to near ambient temperature is desirable, unless the steel is required to have been preheated for welding.

Breaking Out Surrounding Concrete

Embed plates are often set into concrete with the front face of the embed plate flush with the concrete surface. When this is done, thermal expansion of the width and height of the embed plate, as compared to the thickness, will apply pressure to the surrounding concrete and may cause the concrete to crack. To mitigate this problem, a gap can be provided between the edge of the embed and the surrounding concrete as shown in Figure 14-13. If filling of the gap is necessary, this can be done after welding is completed.

Distortion

Welding can cause embeds to distort, which may cause the surrounding concrete to crack, or may cause the anchorage to pull away from the concrete. Designs and techniques that minimize distortion should be used (see Chapter 7 of this Guide). Methods of reducing distortion may include using a thicker embed plate, reducing heat input, and avoiding overwelding. Thicker embed plates allow for more heat absorption and dissipation. Reducing heat input decreases the thermal energy available to cause distortion. Finally, overwelding will require more heat than necessary to complete the welded joint.

The distortion measured on the edges of a 1 3/16-in. (30 mm) thick embed plate experienced minimal distortion when preheated to 390°F (200°C) and connected to girder plates with two ¾-in. (20 mm) groove welds (Klimpel et al., 2000).

Loss of Anchorage

Perhaps of greatest concern to the engineer is the potential loss of anchorage between the embed plate and the surrounding concrete. This concern has two origins. First, the anchorage element (e.g., stud or reinforcing steel) on the other side of the embed plate will heat and expand during welding and potentially cause the concrete to spall at the anchorage. Secondly, distortion caused by welding on the embed plate will create such a force as to pull the assembly from the concrete. The concern about heat causing sufficient expansion of the anchorage element may be misdirected. This level of expansion would require a unique arrangement of the anchorage elements as compared to the location where field welding is required. Likely the location of welding will be far enough away from the anchorage to preclude enough heat conduction and thus thermal expansion. As to the concern about distortion causing sufficient stress to pull out the anchorage, the means of mitigation lies in the elimination of the excessive distortion.

Damage to Concrete

Welding will result in high temperature, short duration temperature excursions; the effect of this temperature rise on the

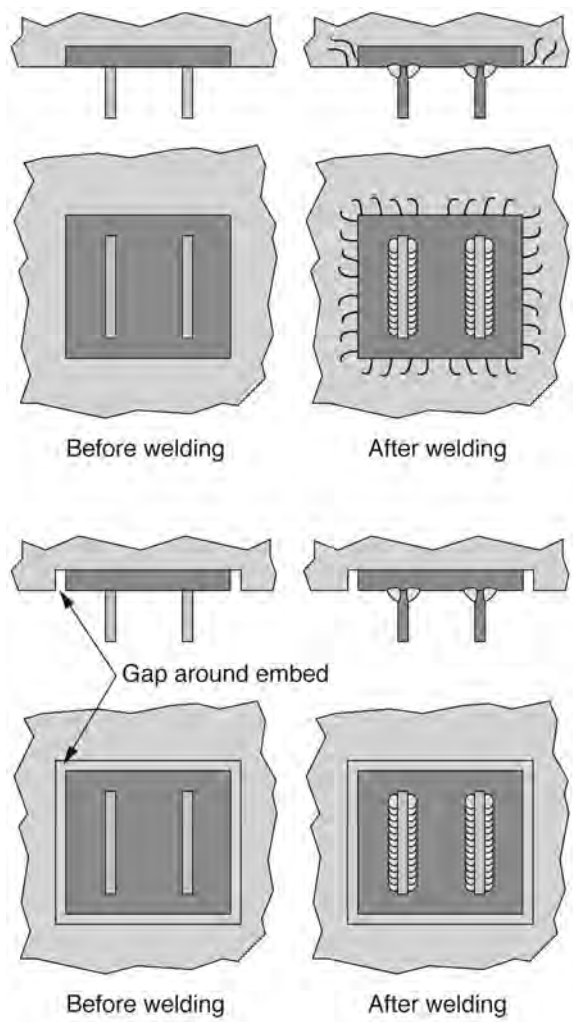

Fig. 14-13. Embed detailing to limit concrete cracking.

properties of the concrete are not known to this author. For critical applications, tests that measure the effects of these temperature excursions should be performed.

14.14.3 Welding on Uncured Concrete

Concrete takes time to fully cure. Although the outside may appear dry, the interior portions of the concrete take longer to cure. Welding on uncured concrete may cause the moisture within the concrete to boil. This boiled off moisture expands and increases the pressure in the anchorage cavity. Concrete exploding may occur as a result. To mitigate the problems with wet concrete, delay welding until the concrete is fully cured or at a low moisture content, decrease the heat input, and increase the embed thickness.

14.14.4 Stainless Steel Embeds

Embeds may be constructed of stainless steel. The thermal conductivity of stainless steel is one-third that of carbon steel, meaning that the thermal energy of welding will be more slowly conducted in the surrounding material. In addition to lower thermal conductivity, stainless steel has a coefficient of thermal expansion that is 50% greater than that of carbon steel. As a result, stainless steel typically experiences more distortion problems than carbon steel and requires extra care when deformation and thermal expansion is a concern.

14.14.5 Galvanized Embeds

Embed plates are often hot-dip galvanized after shop welding; field welding on galvanized surfaces may be required. When the underlying base metal is carbon steel, the same distortion and thermal characteristics of mild steel still apply. Welding of galvanized material is discussed in greater detail in Section 14.2 of this Guide.

14.14.6 Suggestions for Welding on Embeds

The following general guidelines are offered for field welding of embed plates when anchored in concrete:

1. Use embeds plates that are at least ½ in. (13 mm) thick.

   The thicker embed plates will distribute the thermal energy of welding more rapidly and will reduce the peak temperature on the steel in contact with the concrete. Further, thicker embed plates will better resist distortion.

2. Select steel grades and thicknesses for which preheat of the embeds will not be required.

   For example, ASTM A572 Grade 50 up to 1.5 in. (38 mm) thick can be welded with a preheat of 50°F (10°C), or for normal summertime construction, no preheat, when welded with controlled hydrogen welding processes. An embed made with 2-in.- (50 mm) thick steel of the same grade will require 150°F (65°C) and will be more difficult to weld successfully.

3. Arrange anchorage elements away from the locations where field welds will be required.

   Anchorage elements should not be located on the direct opposite side of the attachments that will be field welded to the embed plates. This concept is illustrated in Figure 14-14. A 1-in. (25 mm) or larger offset will discourage the transfer of thermal energy from field welding into the anchorage elements, mitigating concerns about the integrity of the anchorage.

4. Design embed plate assemblies to resist distortion.

   Embed plates can be designed with stiffeners that can be used to resist distortion that may be of concern when field welds are made. The stiffeners can be on either the exposed or buried side of the embed plate as appropriate for the application.

5. Design the field welded connection to allow for the smallest weld size possible.

   The fillet weld that will deliver the least amount of heat to the embed is a small, single-pass weld. To obtain additional strength from the weld, the weld can be made longer, providing the joint is of sufficient length. Double-sided fillet welds require half as much welding (and corresponding heating) as do single-sided fillet welds of the same strength. When plates become thick enough, using PJP bevel groove welds instead of fillet welds reduces the amount of weld metal deposited. Where design loads allow, intermittent welds can be used instead of continuous welds.

6. Provide a perimeter gap between the edge of the embed and the concrete.

   A small gap of ⅛ in. (3 mm) around the perimeter of the embed will allow for thermal expansion during welding without breaking the surrounding concrete.

7. Allow the concrete to dry and cure before field welding.

   Sufficient time should be allowed to permit the moisture content of the concrete to drop to a safe level before field welding begins.

8. Avoid overwelding in the field.

   Larger than necessary welds will induce more thermal energy than necessary.

9. Control interpass temperature.

   The weld area should be allowed to naturally (air) cool between weld passes. Welding should not resume until the embed has cooled to the minimum interpass temperature.

10. Test critical assemblies with mock-ups.

    Where additional information is needed for a specific procedure to be used, mock-ups utilizing the same concrete condition, the same embed configurations, and the same field welding conditions can be used to evaluate the suitability of the proposed approach.

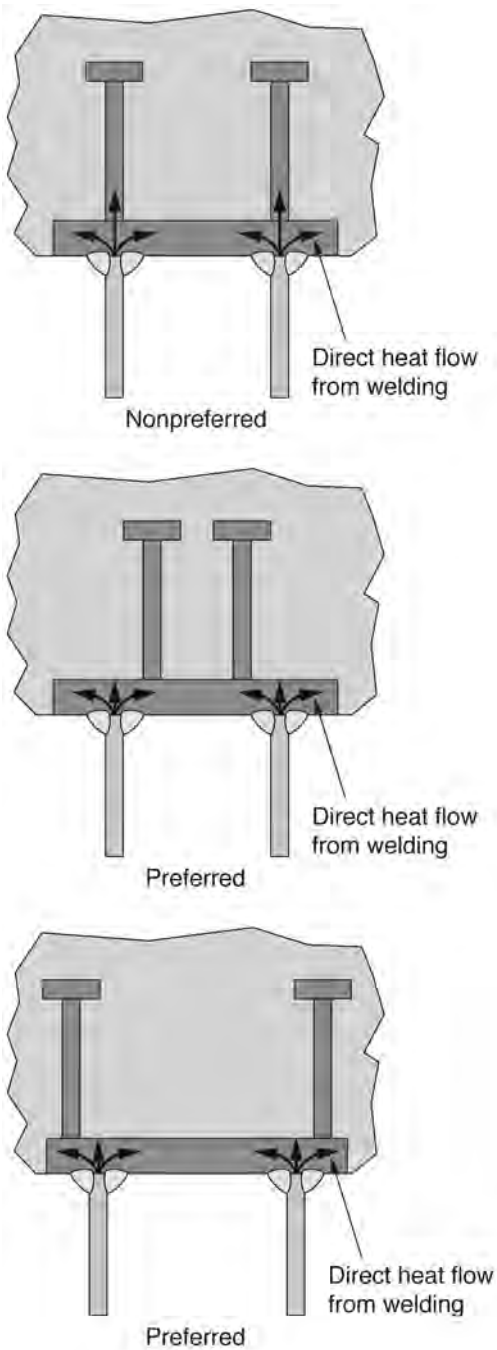

Fig. 14-14. Embed detailing to avoid anchorage damage due to heat from welding.

14.15 HEAT SHRINKING

Heat shrinking is not a welding operation, but an important metal-working operation that can be used to shape new steel, straighten bent steel, and correct members that have been excessively distorted by welding. Different terms are used to describe the process, including flame straightening and heat straightening. The principles that make heat shrinking work are identical to those that cause distortion—localized expansion due to heat, restraint by the surrounding colder steel, and subsequent cooling. The difference is that in heat shrinkage, such forces are being used to accomplish a desired outcome. Heat shrinking is both a science and an art. An experienced contractor can use heat shrinking to achieve amazing results in some situations, but it does require some experience and skill to use the process effectively.

The term *heat shrinking* is used here because it communicates an important aspect of the process; when properly done, the localized area of material is reduced in length and width (i.e., it shrinks) and it gets thicker. Heat shrinking is just the opposite of hot forming or hot bending; with these processes, hot metal is stretched and thinned. When steel is damaged by overload, it may have locally stretched and thinned. Properly done, heat shrinking offsets this damage and returns the material to its original shape and thickness.

Heat shrinking techniques involve localized heating of the steel to temperatures of 1,100 to 1,200°F (600 to 650°C). The steel can be restrained, or jacking forces can be applied to keep the steel from moving in the direction it would assume if such restrictions were not in place. The heating causes the material to locally upset, thickening slightly because the steel was restricted from expansion by the surrounding colder metal. When the steel begins to cool, it volumetrically shrinks, and the resulting strain causes stresses that pull the surrounding steel toward the formerly hot material. A series of heating cycles must be applied, and each cycle incrementally moves the steel into the desired shape.

AISC *Specification* Section M2.1 and AWS D1.1, clause 5.25.2, limit the maximum temperature for heat shrinking to 1,100°F (600°C) for quenched and tempered steels, and to 1,200°F (650°C) for hot-rolled steels. When the maximum temperature is kept below these limits, the steel is kept below the transformation temperature, and in the case of the quenched and tempered (Q&T) steels, below the tempering temperature. Thus, the steel cannot be hardened if it is cooled too quickly, nor will it be softened due to annealing.

Restraint against movement induced by the heating process is essential for heat shrinking. Otherwise, the material would simply expand and contract back to the original shape. Members may be simply braced against movement or may be prestressed where the member is displaced in the direction of intended movement. This speeds the process considerably and makes each application of heat more efficient. Jacking forces may initially impose only elastic loading on

the steel, but as the steel is heated and expands, the local expansion causes localized yielding. Additionally, when heated to these temperatures, the yield and tensile strength of the steel drop, and yielding is more easily achieved. It is recommended that jacking forces not exceed 50% of the yield stress of the steel at room temperature (Avent and Mukai, 2001). After the steel begins to cool, the desired movement occurs. Cooling takes time, and to accelerate the process, compressed air or a water-air mist may be applied. The steel cannot be hardened by these methods if it is not heated above the prescribed limits.

Various heating patterns have been developed to correct for specific damage or to induce specific shapes into members being formed. Discussion of these techniques is beyond the scope of this Guide, but detailed information is available in Avent and Mukai (2001).

Reasonable concerns have been raised regarding the effect of heat shrinking on the mechanical properties of the steel. Tests performed on undamaged members heated three and four times concluded that there is little change to the modulus of elasticity, slight increases in the yield and tensile strength, and a 10 to 25% increase in the ductility. These data represent the effect on new steel shaped with heat shrinking. Regarding damaged and straightened steel, in general, the yield stress increased approximately 10% over that of the unheated member, while the tensile strength increased 4 to 6% (Avent and Mukai, 2001).

14.16 BUTTERING

Buttering is "a surfacing variation depositing surfacing metal on one or more surfaces to provide metallurgically compatible weld metal for the subsequent completing of the weld" (AWS, 2010d). The weld that is made may be called a *butter weld*, *butter layer*, or simply *butter*. In the structural steel industry, buttering may be used to mitigate lamellar tearing tendencies or to build up the faces of groove weld joint cavities where root openings are excessive. Buttering may be used to restore material from steel that was damaged by corrosion.

The specific applications for buttering in steel construction are described elsewhere in this Guide. The techniques associated with buttering are independent of the application

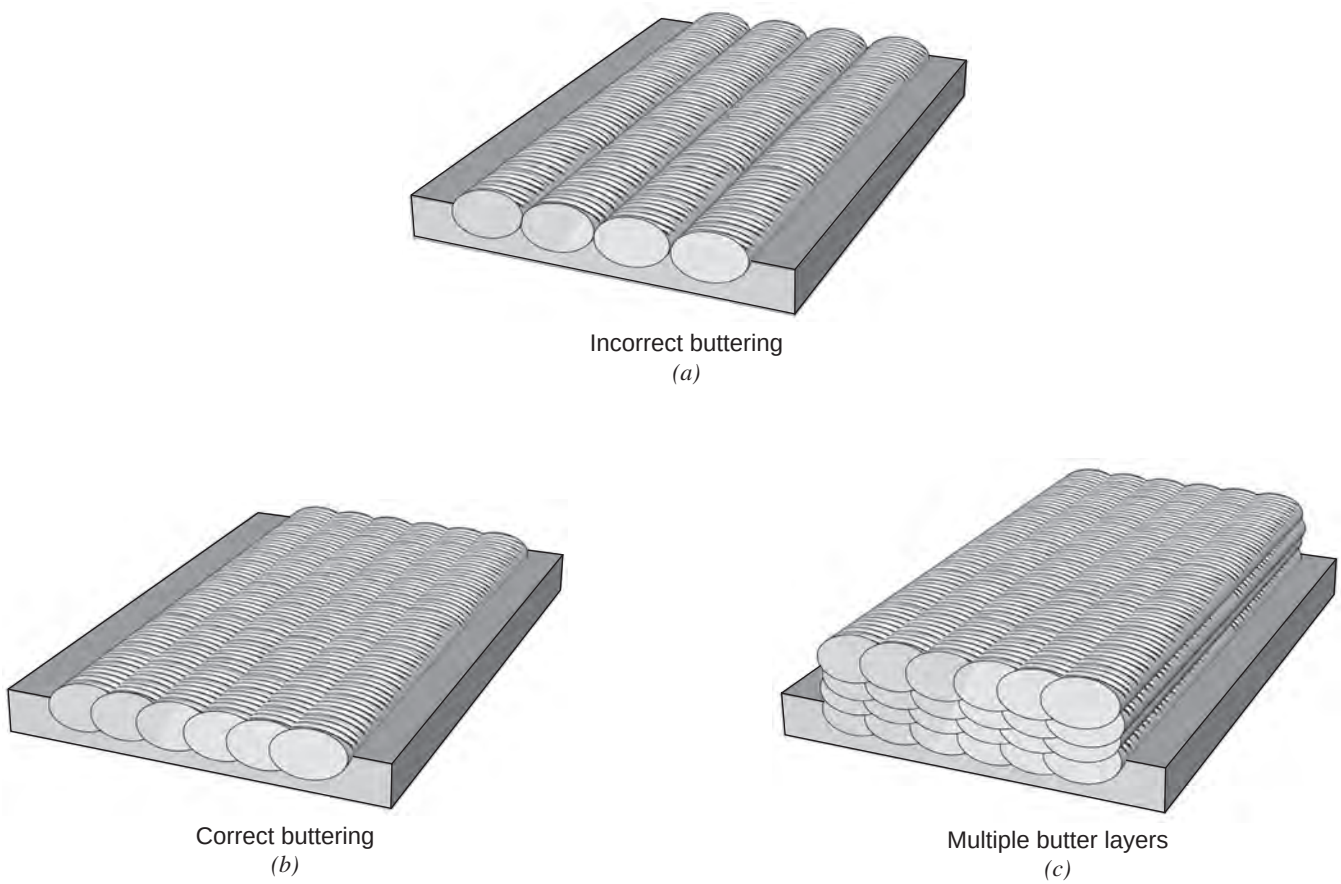

Fig. 14-15. Buttering techniques.

and discussed in this section. The basic concept of buttering is simple—a series of closely spaced and overlapping weld beads are deposited on the surface that requires the butter layer.

The welding process and filler metal used for the buttering is typically different than what will be used for the subsequent joining weld, although it is certainly acceptable to use the same welding method and filler metals. The butter layer and the joining weld, however, must be compatible. For structural steel applications, the filler metals used for buttering should meet all the same properties as required for the joining weld. If weld metal with fracture toughness is required, and if either the buttering or the joining will be done with FCAW-S, the compatibility of the non-FCAW-S and the FCAW-S deposits need to be confirmed (see Section 11.5.5 of this Guide).

All the welding controls applicable to joining welds should be applied to buttering operations, including the use of WPS (along with appropriate preheat, as necessary), qualified welders and visual inspection. There are no prequalified joint details for buttering, but this should not preclude the use of prequalified WPS for this relatively simple application. Workmanship samples made in advance of the actual buttering applications will provide more meaningful data than will WPS qualification testing. Samples can be cut and examined to evaluate weld soundness.

It is important that the welder place the weld beads tightly next to each other with a generous amount of overlap. In Figure 14-15(a), the butter welds are next to each other and a crevice remains between the beads, while Figure 14-15(b) shows a generous amount of overlap. An approximate 50% overlap is typically used. When needed, multiple layers of weld metal may be deposited as shown in Figure 14-15(c).

Properly made, buttering can build up a surface that is ready for the joining weld with no grinding required, although the final butter layer can be ground as necessary to provide a good surface for the joining weld.

When the joining weld is complete, whatever NDT is applied to the completed joint should be considered for the butter weld as well. When CJP groove welds are ultrasonically inspected, the butter layer will naturally be part of the sound path and the integrity of the butter weld evaluated simultaneously with the joining weld. If desired, the internal soundness of the butter weld can be evaluated before the joining weld is applied; the top surface of the butter weld will need to be ground smooth and the soundness evaluated by ultrasonic testing (UT) using a 90° probe.

A massive steel casting in Toronto's Queen Richmond Centre West.

Chapter 15
Problems and Fixes

15.1 REPAIRS TO BASE METAL

15.1.1 General

Structural steel may need to be repaired for a variety of reasons. The steel product produced in the mill may contain imperfections typically called mill-induced discontinuities that may require repair. Base metal may be damaged during shipping, fabrication or erection. Welding or heat shrinking can be practical ways to repair such damage. Base metal may be damaged in service, necessitating repair by welding.

Base metal may be damaged in service by fires, earthquakes or other severe events; repairs for service-related damage are discussed in Section 14.9 of this Guide. Repair of cut edges is a special type of base metal repair addressed in Section 15.2 of this Guide.

15.1.2 Repair of Mill-Induced Discontinuities

Steel products are required by ASTM A6, Section 9.1, to be "free of injurious defects and shall have a workmanlike finish" (ASTM, 2016). A note to this section explains that "Non-injurious surface or internal imperfections, or both, may be present in the structural product as delivered and the structural product may require conditioning by the purchaser to improve its appearance or in preparation for welding, coating, or other further operations." The steel manufacturer is permitted to condition the steel by grinding within limits; when conditioning alone is not sufficient to meet quality standards, repairs by welding are permitted. Limits for conditioning and repair by welding as performed by the steel manufacturer are specified in ASTM A6, Section 9.

Separate conditioning provisions are provided for plate, shapes and bar. Imperfections can be removed by grinding within the limits shown in Table 15-1; within these limits, repair welding is not required.

For defects that require deeper removal depths than those shown in Table 15-1, repair by welding is permitted. The total area of ground material must not exceed 2% of the total surface area of that piece. The reduction in thickness by grinding must not exceed 30% of the nominal thickness of the material at the location of the imperfection, nor exceed 1¼ in. (31 mm).

The complete requirements are contained in ASTM A6, Section 9.2. Table 15-1 is included for two reasons. It provides reasonable limits for the repairs that should be permitted to be made by the fabricator or erector who uncovers mill-induced defects that were somehow not corrected by the steel producer. Secondly, the same criteria provide a reasonable basis to justify repairs that are required because of steel damaged during fabrication (see Section 15.1.3 of this Guide).

15.1.3 Repair of Damaged Steel

The engineer is required to approve most repairs made to base metal according to AWS D1.1, clause 5.25.3. Exceptions to this general pattern include certain repairs for mill-induced discontinuities and repairs to cut edges. The general base metal repair procedures are similar to those associated with weld repairs as outlined in AWS D1.1, clause 5.25. More specialized procedures may be required for the specific type of damage involved.

Some damage need not be repaired at all. For example, chain marks from handling the steel typically result in shallow rounded cavities surrounded by a slight bulge in the surrounding steel. As long as there are no localized nicks or cracks, and assuming no aesthetic criteria apply, such imperfections are normally acceptable for static service conditions.

Nicks, gouges and tears create stress concentrations that should not be ignored. Minor stress concentrations can be repaired by shallow, localized grinding. The purpose behind the grinding is to eliminate localized notches and gouges that may prove problematic in the future, whether in fabrication, erection or service. The grinding should be gradually faired into the surrounding steel; AWS D1.8, clause 6.18.5.1, stipulates that for seismic projects, the slope should not exceed 1:5 in the direction of stress, or 1:2.5 in the direction transverse to the stress, which would be a conservative recommendation for statically loaded applications. The removed material will reduce the available cross section of the material; a 2% reduction in area is permitted for edge repairs in AWS D1.1, clause 5.14.8.4, and should be generally applicable in other situations. The localized design stress on the member could be used to justify further reductions in the section. Base metal repairs that can be accomplished by minor amounts of metal removal are preferred over solutions that necessitate welding.

Damage that cannot be repaired by localized grinding can be repaired by welding. The general process is straightforward—remove the defective material, being careful to remove the entire defect while avoiding the removal of more steel than necessary. Removal may be done by mechanical means (e.g., machining, chipping or grinding) or thermal means (e.g., arc gouging). The resultant cavity should have a geometry conducive to quality welding; simulating a

Table 15-1. Limits of Imperfection Repaired by Grinding	
Material Thickness, in. (mm)	**Maximum Removal Depth, in. (mm)**
< ⅜ (10)	1⁄32 (1)
⅜ (10) – 2 (50)	1⁄16 (2)
> 2 (50)	⅛ (3)
This table was adapted from ASTM A6, Section 9.2.	

U-groove cavity is a good practice. AWS D1.1, clause 5.25, stipulates that the welding procedure, including the preheat temperatures and filler metals, should be consistent with what would be required for production welding, and qualified welders should be used. Inspection of the repair weld should be consistent with the requirements for a similar production weld.

There is no established or codified limit as to how much repair welding can be performed by a contractor on a given member; practical issues of economics and schedule generally determine how much repair welding is too much. Properly made, weld metal repairs have mechanical properties similar to structural steels and provide a similar level of structural performance for statically loaded structures. The repair options extended to the steel producer in ASTM A6 may also be considered appropriate limits for the extent of repair of damaged steel that the contractor is permitted to make; however, this suggestion would require the engineer's involvement and approval.

For cyclically loaded structures, the fatigue behavior of the member repaired should be considered. A sound, ground flush repair weld would be expected to have a Category B fatigue behavior, lower than that of unwelded steel, which is Category A. While the stress range capability is lower, most cyclically loaded structures are not limited by Category B performance; this must be checked on a case-by-case basis.

For structures subject to inelastic (plastic) deformations in service, such as structures designed to resist seismic or blast loading, the differences in the inelastic behavior of the repair weld metal and the steel must be considered. The yield and tensile strengths of the weld metal and steel will not be identical, nor will the work hardening properties. Accordingly, differential inelastic deformation would be expected and could be problematic, depending on where the repair is located. Caution is in order when extensive base metal repairs made by welding are incorporated into regions where plastic hinges are expected to form in seismic events.

15.2 REPAIRS TO CUT EDGES

15.2.1 General

Repairs to cut edges may be required to fix mill-induced discontinuities that are discovered after cutting or to correct for errors made during cutting. Each is described separately in the following sections.

15.2.2 Mill-Induced Discontinuities on Cut Edges

When steel is cut, internal discontinuities in the steel may be revealed on the cut surface. The typical feature observed will be a line because the cut will normally sever a planar discontinuity in the steel. The topic of cut edges and how they are to be handled is discussed in Section 9.7.2 of this Guide. AWS D1.1, clause 5.14.5, stipulates that some of the repair procedures do require the engineer's approval.

Two factors should be considered when dealing with the acceptability of repairs to cut edges that exceed the limits presented in AWS D1.1: the extent of the discontinuity and the direction of loading as compared to the discontinuity. First, the extent of the discontinuity must be investigated. What can be observed on the cut edge is a line, which is likely indicative of a planar discontinuity. Assume that the discontinuity is a circular, planar void in the steel with a diameter of 1 in. (25 mm). The cut may intersect the void across the diagonal, in which case a 1-in. (25 mm) line, is observed along the edge. More likely, however, the cut will be away from the diagonal, resulting in a smaller linear indication on the cut. The size of the void needs to be determined. Also, while the cut intersected one inclusion, it is probable that there are others that were not severed but are nevertheless present in the steel. Grinding of edges that revealed indications can be used to determine the overall size/depth of the discontinuity. Ultrasonic testing can be used for this purpose and also to determine the presence of inclusions away from cut edges. Determining the size and extent of such discontinuities is important.

The second consideration is the direction of loading as compared to the discontinuity. Most often, the linear indication on an edge is representative of a planar discontinuity that is parallel to the surface of the steel. Typically, but certainly not always, steel is loaded in the same direction in which it is rolled. When this is the case, the inclusions are parallel to the direction of stress and are not likely to create a stress raiser. The major exceptions to this trend involve welded attachments. It is routine for attachments to intersect steel members in an orientation that is perpendicular to the direction of rolling. Often times, the attachment will be

made to the surface of the steel. When this is the case, the weld shrinkage will strain the steel in the through-thickness direction and the welded attachment will allow for service loads to be passed through the thickness of the steel. Under these loading conditions, inclusions are more problematic. See Section 6.4 of this Guide.

15.2.3 Fabrication-Induced Discontinuities on Cut Edges

The general topic of the quality of cut edges is discussed in Section 9.7.2 of this Guide. Specific roughness requirements for various thermal cuts are outlined in AWS D1.1, and occasional notches and gouges that exceed those limits can be repaired with the engineer's approval according to AWS D1.1, clause 5.14.8.4.

The AWS D1.1 Commentary addresses the topic of occasional notches and gouges by stating that the committee "refrained from assigning any numerical values on the assumption that the Engineer, being the one most familiar with the specific conditions of this structure, will be a better judge of what is acceptable. The Engineer may choose to establish the acceptance criteria for occasional notches and gouges." The emphasis is on "occasional," not on the depth, as specific criteria for depth are provided.

Thermally cut edges can be grouped into two major categories: edges that will become part of a welded connection and those that are simply the edge of a part. The quality requirements for both types of thermally cut edges are the same. However, when deeper gouges are involved, the final function of the edge should be considered. When the cut edge will be covered with weld metal, as is the case for a thermally cut beveled edge, the primary concern is the potential effect of the gouge on the weld quality. The welding arc will not likely penetrate and fuse to the root of narrow, deep gouges. Gouges on such surfaces can be repaired by grinding, which will have the effect of increasing the root opening, or by repair welding the cavity. The grinding option is appropriate when the allowable variations in root opening are not exceeded (see Section 15.4 of this Guide), whereas the repair welding option makes sense if deeper gouges are involved. Some cut edges become part of a weld joint, but the weld metal is not deposited on the edge; the edge of the T-joint that is joined by a fillet weld is an example. The aforementioned option of grinding is usually not applicable in such cases as it will result in excessive gaps. Localized repair welding of such edges before assembly into the joint is appropriate.

From a practical perspective, gouges created by automatically guided thermal cutting methods will not be excessively deep and such gouges can be practically repaired. Manually guided thermal cutting is another issue: The lack of mechanical control over torch height, angle and cutting speed may result in deep gouges, particularly on thicker steel. While grinding of surfaces with deep gouges may be practical, extensive repair welding is typically impractical.

15.3 BUTT JOINT ALIGNMENT

Butt joints are ideally aligned in a planar manner so that after welding, there is no eccentricity associated with the assembly. AWS D1.1, clause 5.21.3, permits an offset of up to 10% of the thickness of the thinner part joined or ⅛ in. (3 mm), whichever is smaller, for parts that are "effectively restrained against bending due to eccentricity in alignment." When correcting for misalignment, the resultant slope between the parts cannot exceed 1 in 24 [½ in. (13 mm) in 12 in. (300 mm)], as shown in Figures 15-1(a) through 15-1(d).

For thicker materials, achieving the required degree of alignment can be a significant challenge. Permitted mill tolerances on rolled sections may preclude alignment to these standards. Thick plates that resist bending may be difficult to bring members into alignment. Mechanical means (guys, wedges and jacks) can be used, as can heat shrinking (see Section 14.15 of this Guide) to bring members into alignment. In some cases, shapes or fabrications may need to be cut apart to achieve the desired alignment.

For situations where alignment to AWS D1.1 criteria is difficult or impossible, alternatives approved by the engineer should be considered. Whereas a 10% misalignment is permitted for 1-in.- (25 mm) thick steel, the ⅛-in. (3 mm) limit when applied to 4-in.- (100 mm) thick steel is only a 3% offset. The thicker plate has a much greater ability to resist any eccentric loading than does the thinner example. This apparent lack of logic is rooted in the philosophy of AWS D1.1; it is a workmanship-based standard, not a fitness-for-purpose standard (see Section 9.4 of this Guide). Alternate acceptance criteria based on fitness-for-purpose principles can be used to accept otherwise nonconforming alignments.

With the engineer's approval, excessive misalignment may be compensated for by welding to build up a gradual transition between the pieces. The concept is similar to that used for misaligned tubular members in AWS D1.1, clause 9.24.1. The 4:1 slope for cyclically loaded tubular members is unduly conservative for statically loaded structures; the 2.5:1 transition utilized for cyclically loaded tension members can be conservatively used to correct for misaligned members, as shown in Figure 15-1(e). Eccentricity needs to be considered as the offset becomes larger.

15.4 OUT-OF-TOLERANCE WELD JOINTS

15.4.1 Sources of Fit-Up Variation

A commonly encountered problem is one of poor fit-up. Poor fit-up may be the result of poor assembly practice, in which case extra attention to the fitting of the joint will solve

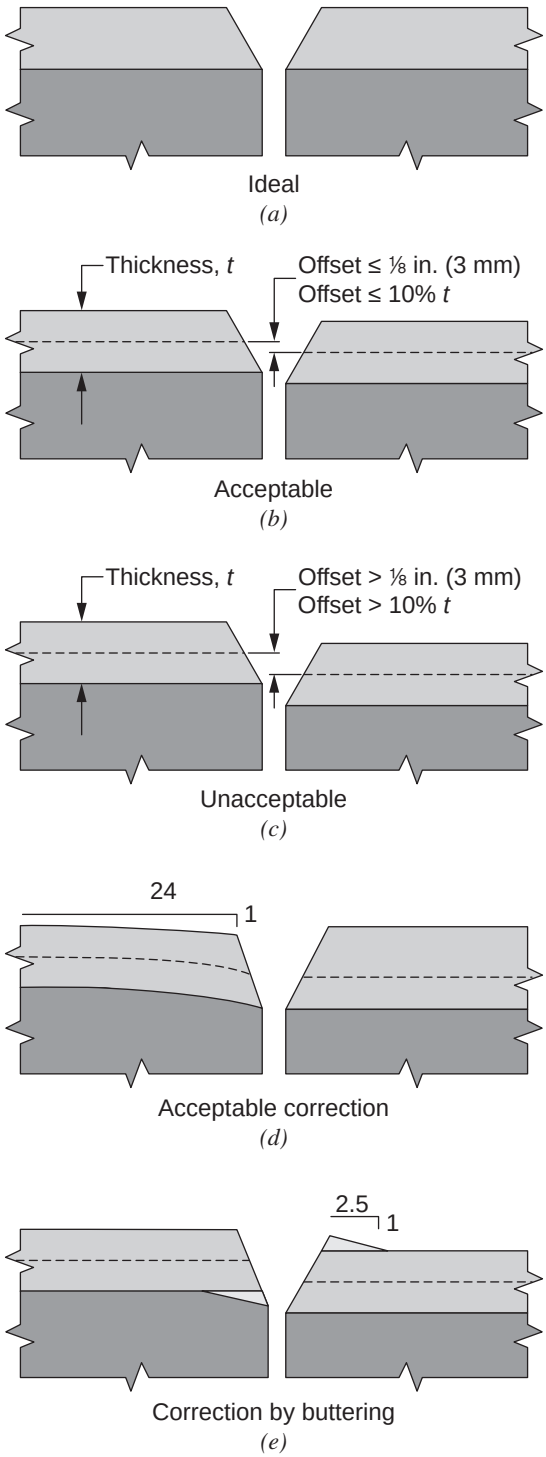

Fig. 15-1. Correction approaches for misaligned members.

the problem. However, if members are cut too short in fabrication, there may be gaps that cannot be overcome during erection, regardless of amount of attention directed toward achieving good fit-up. Fit-up and alignment problems are not always indicative of workmanship problems; frequently, poor fit-up is often due to the accumulation of a series of acceptable tolerances that result in an out-of-tolerance condition for the weld joint. The acceptable variations may be in the as-produced steel member, as well as variations in the fabricated members. The shrinkage of previously made welds will add to the variations. Members can be improperly cut and bevels for groove weld preparations can be cut at incorrect angles. All of these variations may accumulate and become fit-up problems, particularly in erection, resulting in joints that are too tight or too loose (too open).

AWS D1.1 provides tolerances for allowable variation in joint dimensions. Within these limits, no correction is needed, even if the actual dimensions deviate from the nominal. In some cases, the code provides corrective actions that the contractor can use without any special approvals. Beyond certain limits, however, the engineer must approve the corrective action.

15.4.2 Fit-Up Problems with Fillet Welded Joints

T-, corner and lap joints can be joined with fillet welds, but such joints can only be fit too loosely (i.e., with gaps that are too large). Joints receiving fillet welds are to be fit "as close as practicable" according to AWS D1.1, clause 5.21.1. Gaps of up to 1⁄16 in. (2 mm) are permitted without correction. If root openings exceed 1⁄16 in. (2 mm), but are less than 3⁄16 in. (5 mm), the weld can be made without correction of the joint, but the fillet weld leg is to be increased by the amount of the gap. The reasoning behind this requirement can be seen in Figure 15-2. In Figure 15-2(a), a tightly fit joint and the effective weld throat size are shown. In Figure 15-2(b), a small and acceptable gap is shown, along with the slightly reduced throat dimension. In Figure 15-2(c), the root gap is excessive and the reduction in weld throat is apparent. In Figure 15-2(d), the leg size has been increased by the amount of the gap, resulting in a weld throat that is of the same size as shown in Figure 15-2(a). Adjustment of the weld size to compensate for larger gaps requires an in-process inspection program where such gaps will be noticed before the joint is welded; fit-up of joints that receive fillet welds is a before welding Observe task in AISC *Specification* Table N5.4-1.

The larger-than-normal gap may encourage deeper joint penetration, with a resultant increase in weld throat as shown in Figure 15-2(e). Instead of increasing the weld leg size, AWS D1.1, clause 5.21.1, permits the additional root penetration to be used to compensate for the gap when the contractor demonstrates that the required effective throat has been achieved. No method is prescribed as to how this is to be demonstrated, but welded, cut, polished and etched

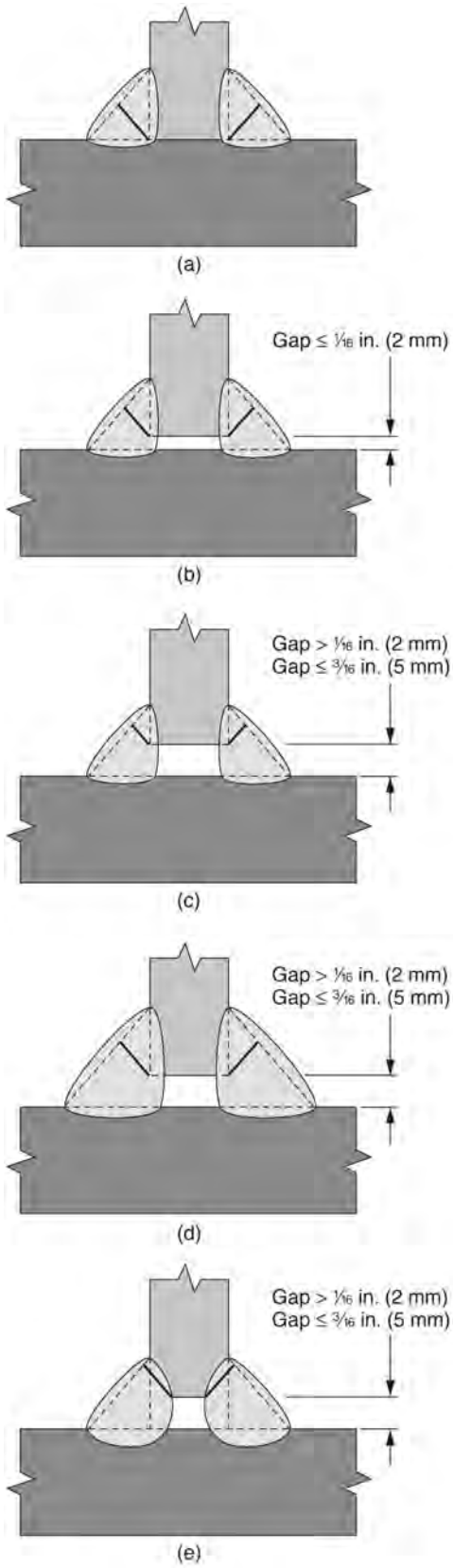

Fig. 15-2. Joint tolerances for T-joints with fillet welds.

mock-ups that represent the actual conditions (similar gap, steel thicknesses, WPS values, etc.) can be used for this purpose.

The permitted gap of up to 3/16 in. (5 mm) is increased to 5/16 in. (8 mm) for base metal thicknesses of 3 in. (75 mm) or more, if suitable backing is provided to facilitate quality welding. Several acceptable options are provided in AWS D1.1, clause 5.21.1, with the objectives being to limit melt-through into the joint and to bridge the large gap.

AWS D1.1 does not provide corrective measures for gaps that exceed the 3/16-in. (5 mm) or 5/16-in. (8 mm) limits. The engineer may be called upon to approve contractor-initiated approaches to handle such situations, using the authority granted to the engineer in AWS D1.1, clauses 1.4.1 and 6.5.3. Gaps can be reduced by overlaying weld metal (buttering) on the ends of the members that are too short (see Section 14.16 of this Guide). In other cases, it may be more practical to use a groove weld in lieu of the fillet weld that was specified. The excessive root opening may make a fillet weld impractical, but may provide an appropriate root opening for a complete-joint-penetration (CJP) groove weld; a bevel groove or other groove weld preparation will likely need to be provided if this change is made.

For some connections, particularly those loaded in compression, there may be a requirement for fit that would preclude the application of the options previously discussed; the ends of bearing stiffeners being an example, as discussed in AWS D1.1, clause 5.22.10.

15.4.3 Fit-Up Problems with CJP Groove Welded Joints

General

Butt, corner and T-joints can be joined with CJP or partial-joint-penetration (PJP) groove welds. Two fit-up problems may occur: butt joint alignment and groove weld joint geometry issues. As to the latter, the joint geometry can be too tight or too loose (too wide). For CJP groove welds in butt joints, the fit of backing (if used) may be problematic when the joint is misaligned.

CJP Groove Welds Fit-Up: General

Three fit-up problems can occur with CJP groove welds: the joint geometry can be too tight, too loose (too wide), or may have problems associated with the fitting of the backing (when required) to the root of the joint.

Prequalified, one-sided CJP groove welds are made into steel backing, and all involve a root opening dimension; most have inclined surfaces so as to form some type of included angle. Steel backing makes it possible to weld joints with wider root openings. Excessively wide joints will require additional weld metal to complete the joint, adding to the cost, shrinkage, residual stresses and distortion associated with the weld.

Double-sided CJP groove welds are less forgiving of fit-up problems. While tight fit-up is usually acceptable, loose fit-up creates welding challenges—the weld metal can drip through the joint. Accordingly, the allowable fit-up tolerances for double-sided joints are more restrictive than for single-sided joints with backing, as can be seen in AWS D1.1, Figure 5.3.

Narrow root openings and small included angles will inhibit the ability of the welding process to achieve consistent root fusion and may lead to width-to-depth centerline cracking (see Section 6.3.1 of this Guide).

CJP Groove Weld Joints with Backing: Fit-Up Too Tight

The allowance for deviating from the specified root openings is −1⁄16 in. (−2 mm) and −5° for included angles (see AWS D1.1, Figure 5.3). Given the size of erected structures, this negative tolerance can be a challenge. Uncorrected, however, the tightly fit single-sided CJP groove weld joint will inevitably have weld root defects. Fortunately, the too tight condition is easily corrected; even after assembly, the joint can be gouged, ground or both, to open the joint to a conforming geometry. Before the joint is welded, the cavity should be cleaned of any debris remaining from the gouging and grinding operations.

CJP Groove Weld Joints with Backing: Fit-Up Too Loose

For CJP groove welded joints with backing with root openings greater than those allowed, but not greater than the lesser of twice the thickness of the thinner part or ¾ in. (19 mm), a weld overlay (buttering) can be used to achieve acceptable dimensions; this is allowed if done before the joint is assembled according to AWS D1.1, clause 5.21.4.2. This concept is illustrated in Figure 15-3. Buttering involves depositing a series of weld beads on the surface (see Section 14.16 of this Guide). Any welding process can be used, although the welding current must typically be reduced to avoid excessive heat buildup on the edge. The buttering is performed when the joint is disassembled; this permits the weld beads to shrink in an unrestrained manner and will not add to the distortion or other shrinkage that occurs when the joint is finally welded.

The aforementioned limits of two times the plate thickness or ¾ in. (19 mm) are rules-of-thumb incorporated into AWS D1.1. Except for thin members, the fixed dimension of ¾ in. (19 mm) will normally control. A root opening of ¼ in. (6 mm) with a tolerance of +¼ in. (+6 mm) allows for a ½-in. (13 mm) root opening. Once the root opening exceeds this limit, the buttering option can be used until the root opening exceeds ¾ in. (19 mm). For joints fit wider than this limit, AWS D1.1, clause 5.21.4.3, stipulates that the engineer's approval is required.

Extra-wide root openings will result in additional shrinkage and corresponding stresses in the joint; such stresses can cause cracking, tearing and distortion. However, concerns about loosely fitted joints are often misplaced. Consider a single-bevel groove weld on a 1-in. (25 mm) plate, with a ¼-in. (6 mm) root opening and 45° included angle in a T-joint. An ideally prepared weld will require 3.08 lb/ft of weld metal (4.6 kg/m). If the code permitted

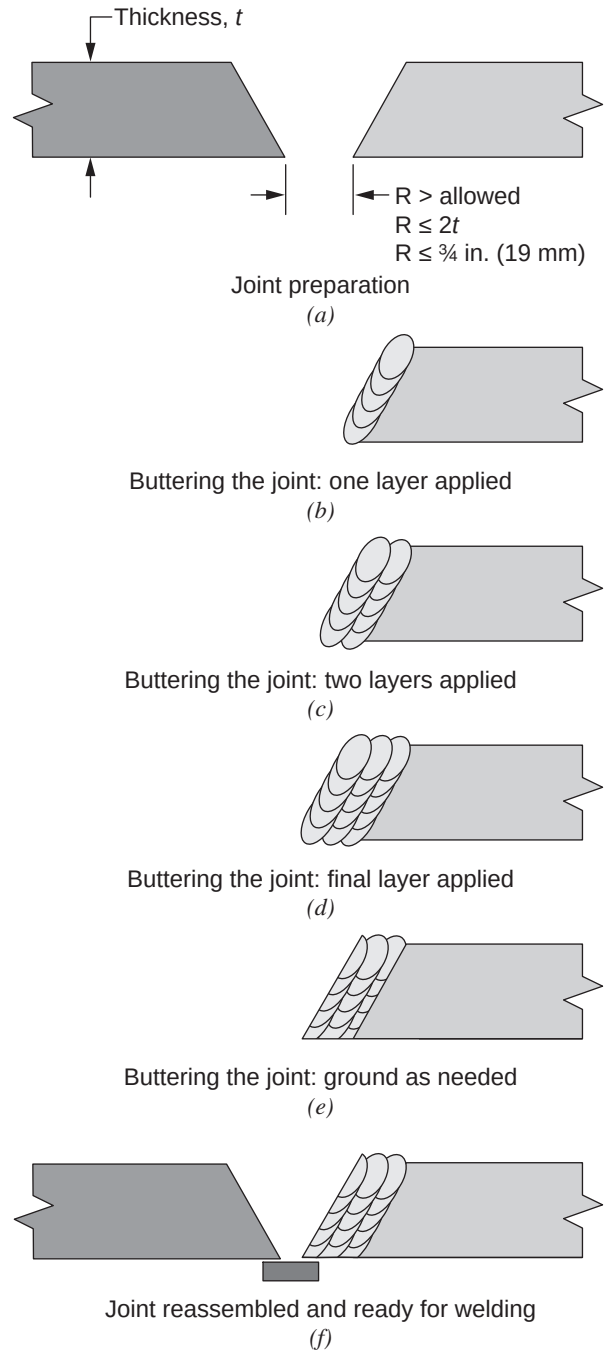

Fig. 15-3. CJP groove weld fit-up correction by buttering.

+¼-in. (+ 6 mm) increase is applied to the root opening and +10° is added to the included angle, the weld metal volume increases by 60%, and this increase is permitted without any correction. Yet, if the same root opening is allowed to increase from the ideal of a ¼ in. (6 mm) to an unacceptable (without correction) dimension of ¾ in. (19 mm), the weld metal volume increase over the ideal is 57%, slightly less but practically the same as in the previous example. In terms of AWS D1.1, one condition is acceptable without correction while the other is not, even though the weld volume increase is slightly less for the unacceptable condition. Furthermore, the joint with the larger root opening will experience less angular distortion due to the smaller included angle as shown in Figure 15-4.

The apparent lack of logic is the result of a workmanship-based standard versus a fitness-for-purpose standard; because root openings can normally be controlled within the +¼-in. (+6 mm) tolerance, this is standard. When unacceptable root openings are encountered and solutions are considered, comparing alternatives to acceptable practices can be instructive. Out-of-tolerance groove welded joints that can be corrected with no more additional weld metal than is permitted for similar joints within permitted tolerances and can probably be welded without correction must be approved by the engineer or record. Welding the joint shown in Figure 15-4(c), even without correction of the out-of-tolerance condition, will likely result in an acceptable weld.

The limitation on buttering of ¾ in. (19 mm) can be extended with the engineer's approval. If the plate being joined is ½ in. (13 mm) thick, a root opening of ¾ in. (19 mm) can be repaired by buttering; in this case, the root opening is 1.5 times the thickness of the plate. The same ¾-in. (19 mm) limit applies to 4-in. (100 mm) material; in this case, the buttering is only 20% of the plate thickness. Properly done, there is no limit to how thick a butter layer can be applied, and buttering the face of a thick joint may be the best option to address such a situation. Ironically, it is easier to butter the face of a groove weld on 4-in. (100 mm) material than buttering the face of a groove weld on ½-in. (13 mm) material.

Consider a 3-in. (75 mm) groove weld with a root opening that is 1½ in. (38 mm) too wide. One corrective action that might be contemplated is to splice an extension to the member (see Section 15.5 of this Guide). When this approach is used, little thought or concern may be given to the volume of weld metal associated with making that splice, or to the corresponding issues of residual stress and distortion. A butter layer of 1½ in. (38 mm) requires slightly less weld metal than would be associated with a splice, and the buttering option should result in lower residual stresses and less angular distortion.

As to bevels that may be cut too large—which would be indicative of a fabrication problem, not a field fit-up issue—the surfaces can be easily buttered to bring the joint into acceptable dimensions.

For thick butter layers, extra inspection of the joint is justified, and the acceptance criteria for the butter layers should be the same as those for the joining weld. The butter weld can be inspected at the same time as the joining weld.

At some point, poor fit-up conditions become so severe that practicality dictates the member should be replaced or a splice inserted. For the splicing option, see Section 15.5 of this Guide.

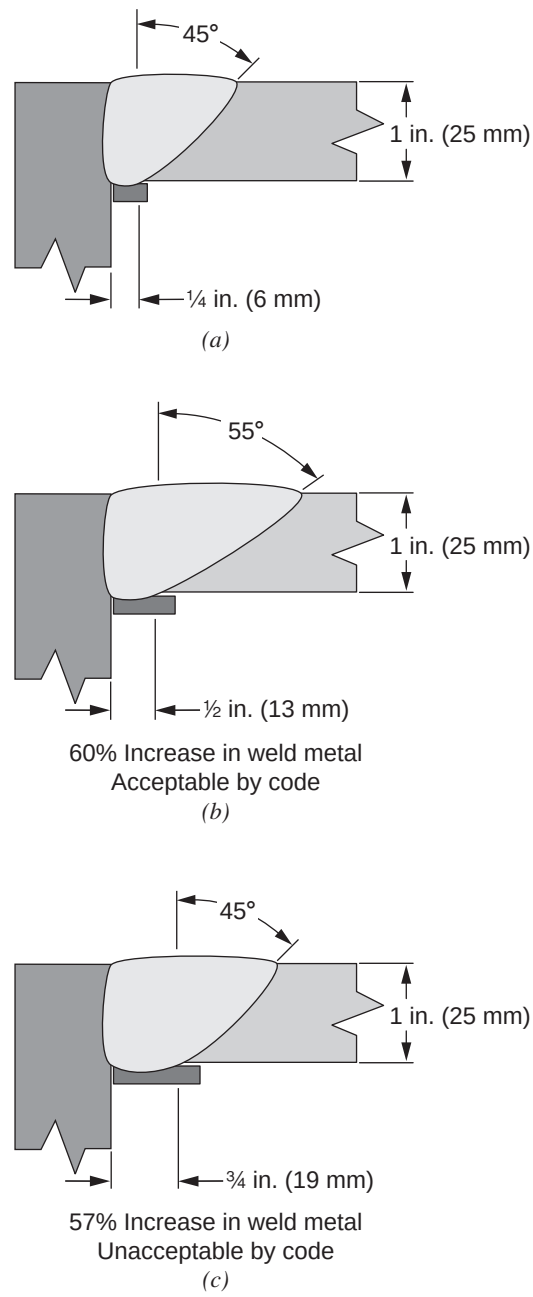

Fig. 15-4. Joint details and deposited weld metal volumes.

CJP Groove Welds: Fit-Up of Backing

Ideally, backing is fit flush to the backside of the joint, but some gaps are inevitable. The maximum gap between the backside of the joint and the backing is 1⁄16 in. (2 mm) according to AWS D1.1, clause 5.21.1.1. Fitting backing to two flat plates configured in a butt joint is relatively easily done, but rolled shapes can present challenges. Consider a rolled beam prepared for a moment connection. As shown in Figure 15-5(a), an ideally prepared weld access hole has been supplied to an ideally dimensioned rolled section. In such cases, fitting of the backing is easily accomplished as shown in Figure 15-5(b). In Figure 15-5(c), the unacceptable fit condition is due to cutting dross on the edge of the bevel; this situation is easily corrected by removal of the dross by chipping or grinding. In Figure 15-5(d), a commonly encountered situation is illustrated—the cutting of the weld access hole was incomplete, leaving behind a portion of the beam web. The nub is a naturally occurring condition because flame cutting to a point tangent to the beam flange is impossible. The protrusion can be ground to permit the required fit.

Acceptable variations in the geometry of rolled sections can create problems in fitting of the backing. Flanges can be cupped or tilted, as shown in Figure 15-5(f); backing can be bent to bring the fit-up of the backing into tolerance, as shown in Figure 15-5(g). Flanges can also be of different thicknesses as shown in Figure 15-5(g); again, backing can be bent to accommodate such variations.

Poor fit-up of the backing to the back side of a joint is not in and of itself a problem, providing an acceptable root pass can be made; extreme gaps between the backing and the steel being joined can make this task difficult. Perhaps the greatest problem with poor fitting backing comes when the weld is inspected with radiographic testing (RT). Inevitably, slag will collect in the gap between the back side of the steel and the surface of the backing. While this slag is not in the weld itself and is of no consequence to the performance of the connection, the slag will be observed on the radiograph. Resolution of such inspection problems often involves removal of the backing (and the slag) and reinspection.

Double-Sided CJP Groove Welded Joints: Fit-Up Issues

While the fit-up tolerance for CJP groove welded joints with backing is −1⁄16 in., +1⁄4 in. (−2 mm, +6 mm), the tolerance for double-sided joints is −1⁄8 in., +1⁄16 in. (−3 mm, +2 mm). The tighter tolerance is to preclude melt-through in the joints that do not have backing to support the weld metal. The default minimum root opening dimension is zero and tight root openings do not require any correction, provided the included angle is adequate. If there are any fusion problems in the root from the first side weld, such defects will be removed as part of the backgouging operations required for prequalified double-sided CJP groove weld details.

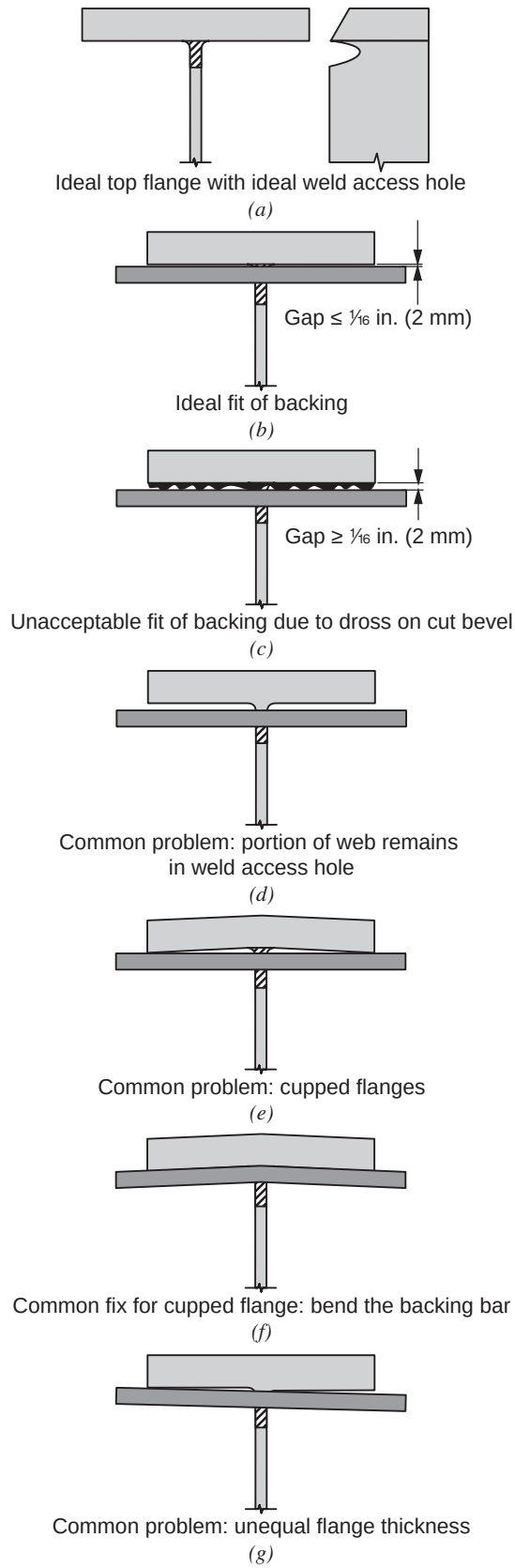

Fig. 15-5. Backing fit-up challenges.

The more significant challenge with double-sided groove welds is posed by joints that are fit with excessive root opening dimensions where melt-through is likely. The faces of the groove-weld joint can be buttered in the same manner as was previously described for single-sided CJP groove welds, with the required approval of the engineer. Another option, again requiring the approval of the engineer, is to insert a weldable steel rod or bar into the center of the joint; the weld is made from one side into the steel component and then the rod or bar is completely removed by backgouging from the opposite side. This approach uses a concept similar to that of the prequalified spacer bar detail (B-U3a) as discussed in Section 3.3.4 of this Guide. It does not involve slugging of the weld, but rather provides a temporary support for the root pass made from the first side, with backgouging to remove the backing. Note: Slugging is defined as "the unauthorized addition of metal, such as a length of rod, to a joint before welding or between passes, often resulting in a weld with incomplete fusion" (AWS, 2010d). With some adjustment in dimensions, some joint details that are impossible to fit to the proper dimensions can be modified to fully comply with the prequalified B-U3a detail. The material used for the spacer should be of a known chemical composition with good weldability. An important aspect of this corrective technique to make certain the inserted steel piece is completely removed before the second side is welded. Whatever solution is implemented, the engineer's approval is necessary. Extra inspection of the completed joint is appropriate.

15.4.4 Fit-Up Problems with PJP Groove Welded Joints

The alignment tolerances for PJP groove-welded joints are the same as those for the previously discussed CJP groove-welded joints, as are the included angle tolerances. The fit-up issues for PJP groove welds are similar to double-sided CJP groove welds—tight fit-up is not a major concern, but excessive root openings may lead to melt-through. The tolerances for PJP groove welds are very restrictive: –⅛ in., +1⁄16 in. (–3 mm, +2 mm).

Unless the root face dimension is large, buttering of the joint is not a practical option. For some applications, a rod or bar can be inserted into the joint and welds placed on either side, in which case the steel insert is left in the joint. This may be an acceptable solution for welds loaded in shear. A more common solution is to simply make the PJP groove weld into a CJP. Two approaches are possible: The joint can be ground or gouged as needed to provide the joint geometry of a prequalified single-sided CJP and backing then placed behind the joint, or alternatively, a rod or bar can be added to the center of the joint, one side welded, the opposite side backgouged, removing all of the inserted material, and then back welded. These solutions require the engineer's approval.

15.4.5 Fit-Up Problems with Plug and Slot Welded Joints

Only lap joints can be joined with plug and slot welds. Faying surfaces that receive plug and slot welds should be assembled as tightly as possible. AWS D1.1, clause 5.21.1.1, does not permit gaps greater than 1⁄16 in. (2 mm). For structural applications, the most likely application for plug and slot welds is for doubler plates on deep column sections.

The primary concern that justifies the fit-up tolerance is with the quality of the plug or slot welds that can be made with the larger gap. Small gaps will result in weld metal and slag flowing between the members of the lap joint, which will not likely constitute a performance problem when the welds are designed to resist shear, as should be the case. Greater gaps may make the welds impossible to apply. In extreme cases, the underlying member can be buttered or the top member ground to fit.

15.5 FIXING MEMBERS THAT ARE CUT SHORT

Members that are cut too short are considered separately from members with poor fit-up (as is discussed in Section 15.4 of this Guide). Poor fit-up gaps may be up to 1 to 2 in. (25 to 50 mm), but when gaps exceed those dimensions, the member was likely cut too short, and the gap is more than simply a poor fit-up issue. The assumption of this section is that buttering (see Section 14.16 of this Guide) is not a viable option to correct for these gaps and a piece of steel needs to be welded in place to make up for the missing length of material.

When a replacement piece is necessary, the general approach is to configure the replacement so that the repair splice length is approximately equal to the width of the section being spliced. For example, if a W30×99 [with a flange width of 10.5 in. (270 mm)] is 3 in. (75 mm) too short, it is preferred to remove additional material so the repair splice is located at least a flange width from the final end of the member. A minimum replacement piece of at least 12 in. (300 mm) is a good rule of thumb. The cost of the extra material will be inconsequential, and one splice weld needs to be prepared and made in any case. The extra steel will permit more balanced heat flow, and importantly, when the final weld is made, the residual stress field of the repair weld will be far enough away from the final weld that potentially harmful interaction will not occur.

AWS D1.1, clause 5.12, cautions that the engineer should be aware of and approve corrections that involve adding additional steel to a member that has been cut too short because it means a change in the weld location.

In most cases, a CJP groove weld will be used to make the splice. Depending on the loading and the magnitude of stress, splices with PJP groove welds may be possible.

15.6 REPAIR OF MISLOCATED HOLES

Mislocated holes should be left unfilled unless they need to be filled for structural purposes. Repair of mislocated holes by welding often leads to other more serious problems. Properly filling a hole for structural purposes can be difficult, time-consuming and expensive.

Usually the limit states of block shear, which can be found in AISC *Specification* Section J4.3, or bearing, which can be found in AISC *Specification* Section J3.10, will determine if the presence of the unfilled hole has any effect on the strength of the joint, although other limit states may also be applicable for the specific condition. Sometimes the hole can be left as is or a bolt installed and properly tensioned. If loss of section is problematic and where a series of holes are involved, a mating part can be cut, drilled and bolted in place. These nonwelded options should be considered before welded solutions are attempted.

If the mislocated hole must be repaired, AWS D1.1 contains requirements and recommendations in clause 5.25.5 and the associated Commentary. Requirements are separated into two categories: statically loaded and cyclically loaded applications. For cyclically loaded applications, the engineer must approve the welded repair and the repair WPS.

Many challenges are associated with repair welding of mislocated holes and repairing a mislocated hole is more complicated than making a plug weld. The diameter of the bolt hole was selected based upon the bolt diameter, not a cavity of a size conducive to making a quality weld. In contrast, plug welds have minimum and maximum diameter dimensions that are a function of the thickness of the plate in which they are to be made, to facilitate quality welding. Plug welds have the benefit of the underlying base metal to support the liquid puddle, unlike the repair of a hole. The bolt hole diameter may need to be increased, or a taper applied around the perimeter of the hole to allow access for the welding electrode and any shielding nozzles, and some means must be supplied to support the molten metal.

The position of welding must be considered; a quality hole repair weld will be most easily achieved by welding in the flat position. Unfortunately, depending on when the mislocated holes are discovered, the steel may already be in place and oriented with the axis of the hole in a horizontal orientation; achieving a quality weld in this orientation is difficult. The steel can be repositioned or the hole expanded into a horizontal groove/slot that has a configuration similar to a horizontal column splice.

Nondestructive testing (NDT) of the repair is recommended because the likelihood of a poor repair is higher than for a routinely made weld. For statically loaded connections, AWS D1.1 requires inspection to the criteria for groove welds, as specified in the contract documents. When the AISC *Specification* is specified, including Chapter N (see Section 10.9 of this Guide), the ulatrasonic testing (UT) requirements for tension CJP groove welds would apply to the hole repair welds in tension zones as noted in AWS D1.1, clause 5.25.5(1). For cyclically loaded connections, the NDT requirements for tension welds are required as noted in AWS D1.1, clause 5.25.5(2). This would apply to all welds made to repair holes, regardless of the direction of cyclic loading. While not mandated by AWS D1.1, for cyclically loaded connections, weld reinforcements should be removed after repairs are complete.

Additional criteria apply for hole repair welds made on quenched and tempered steel as outlined in AWS D1.1, clause 5.25.5(3). Like plug welds, the concentrated heating of the base metal around a hole repair may damage the base metal.

The most practical approach toward repairing steel with mislocated holes is to mock-up samples to be welded by the welder that will make the actual repairs. Visual, nondestructive (RT or UT) and destructive tests (such as bend specimens) can be performed to evaluate the suitability of the anticipated techniques. The mock-ups should replicate as closely as possible the actual conditions that will be encountered in the repair.

Sometimes, holes are mislocated by a distance less than the hole diameter; after the hole is filled by welding, a new hole must be made, overlapping the repair. It can be difficult to accurately drill holes under such circumstances. The drill will be forced to cut through base metal, weld metal and the HAZ, all of which may have slightly different mechanical properties. Drills will divert from the intended path under such circumstances.

15.7 USE OF PLUG WELDS IN LIEU OF BOLTS

When bolt holes do not align, it may be tempting to consider using a plug weld instead. Several cautions should be considered before this is attempted. The hole diameter/plate thickness relationship should be examined; in general, a larger hole size will be needed to make a quality plug weld (see Section 3.6 of this Guide). It is important that the hole be of a sufficient diameter to permit the welder to gain access to the weld root. Failure to do so will inevitably lead to weld root quality problems. The position of welding must be considered. Plug and slot welds are easily made in the flat position, but are difficult to make out of position.

Plug welds are designed to resist shear, not tension; the bolted connection may have been designed with tensile loading in mind. Even if loaded in shear, the shear strength of a plug weld made with typical weld metal will not replicate the capacity of a high-strength bolt.

The connection type may also be a consideration. For example, the recommended design procedure for single-plate connections relies on bolt plowing to satisfy the

requirements for simple connections in AISC *Specification* Section B3.4a, providing rotation capacity in the connection and also acting as a fuse to limit the amount of moment transferred to the supporting member. Replacing bolts with plug welds in this case would require careful consideration on the part of the engineer.

Plug and slot welds are known to have limited cyclic (fatigue) performance and extra caution is in order when a connection designed for a bolted connection is modified and utilizes plug or slot welds instead. Plug welds used in lieu of bolts have caused bridge members to fail in service (Fisher, 1984).

If the hole misalignment is small, it may be possible to drill an oversized hole and install an oversized bolt.

15.8 REPAIRS TO WELDS

15.8.1 General

When a weld is made that contains unacceptable discontinuities (i.e., defects), AWS D1.l, clause 5.25.1, offers three options to remedy the situation: the weld can be repaired; the entire weld can be removed and replaced; or with the engineer's approval, the otherwise defective weld may be accepted for a given situation. Weld quality issues are discussed in Chapter 9 of this Guide, and the concept of fitness-for-purpose (i.e., acceptance of substandard welds without repair) is addressed in Section 9.4.

Weld repairs can be categorized as minor or major. Minor repairs include adding additional material to compensate for undersized welds, replacing welds with excessive porosity, and fixing unacceptable undercut. While these defects must be corrected, they are the result of minor errors and workmanship mistakes. Defects requiring major repairs would include delayed cracking, lamellar tearing and widespread porosity; these are defects that are not expected to occur routinely. Minor and major weld repairs are handled differently. In a general sense, AWS D1.1, clause 5.25.3, states that the contractor is able to deal with minor repairs without the engineer's involvement, but major repairs are to be overseen by the engineer.

When problems are encountered, it is important to determine the cause of the initial defect and to institute corrective actions. Failure to do so will often result in duplicating the conditions that caused the initial problems. After the weld has been corrected, however, most if not all of the evidence that could be used to determine the cause will be destroyed, precluding further analysis. Ideally, an investigation into the cause of the problem should begin before any repairs are initiated, but practical constraints, such as construction schedules, sometimes interfere.

On partially erected structures, before any repair welding is initiated, the overall stability of the member or structure on which the repair will be performed must be verified. This is essential when repairs involve cutting and removing members that are already installed, and the engineer is to be notified before welded members are cut apart for repair according to AWS D1.1, clause 5.25.3. Shoring, temporary bracing, or other means of reinforcement may be necessary to ensure the safety of the workers and the structure during the repair.

Any welding process may be used to make repairs to welds. SMAW is often used, in part due to the ease of access the process provides. Furthermore, by using fresh, properly dried covered electrodes with low-hydrogen coatings, it is possible to achieve very low levels of diffusible hydrogen in the weld metal, offering increased resistance to cracking. Other processes, however, can and have been used successfully; process selection depends on the circumstances surrounding the work, just as is the case for other welding applications. The contractor usually selects the process. For repairs to FCAW-S welds, and when welds are required to have a minimum level of fracture toughness, special caution is in order when repairs are made with other than FCAW-S (see Section 2.3.10 of this Guide).

Because repair welding is typically done under conditions of more restraint, preheat beyond the level associated with normal production welding may be required for the repair. Sometimes, as an additional precaution, post heat is applied to diffuse any hydrogen from the joint.

The cost to repair a defective weld is several times greater than the cost to deposit a quality weld in the first place. Due to widely varying circumstances, precise comparisons are impossible, but as a rule of thumb, a sixfold increase for repair welds as compared to initial welds is a good estimate. This is based upon the following assumptions: that the evaluation of the extent of defective weld to be removed will take twice as long as the initial welding; that the metal removal will take twice as long as was associated with the initial welding; and that rewelding also takes twice as long due to the use of slower welding processes and procedures.

AWS D1.1 does not provide any limits on how many weld repairs are permitted. The data suggest that a properly made weld repair has the same quality whether it is the first repair attempt or the fifth (or more). Repair welds made on fatigue-sensitive ship structures exhibited the same fatigue life as the original welds if the quality was the same (Kelly, 1997). It must be acknowledged, however, that each time an additional attempt to make a weld is undertaken, the likelihood of a successful repair diminishes. The shrinkage of each repair weld will strain the steel that surrounds the repair and force localized yielding to occur. While steel routinely endures a few cycles of such straining, experience has shown that after a half-dozen unsuccessful repairs, future repair attempts will yield similar unsuccessful results. Accordingly, a key principle to apply to a weld repair is to do everything right the first time so that only one repair attempt will be necessary. There

is no reason to establish an arbitrary limit to the number of weld repairs that are allowed; after-repair inspections can be used to determine the suitability of the repair.

15.8.2 Undersized Welds

Undersized welds generally involve fillets where the leg size is less than that specified. AWS D1.1 does not provide a tolerance on weld size, except to permit a portion of the weld to be undersized as will be discussed. When a 5⁄16-in. (8 mm) fillet is specified, there is no allowance in AWS D1.1 for a fillet weld that may be undersized by, say, 0.01 in. (0.25 mm) for the full length. Accordingly, many fabricators routinely make fillet welds slightly larger than specified to avoid the problem of slightly undersized welds.

Under most circumstances, undersized welds are simply repaired by depositing additional weld metal on the surface. When the welds are only slightly undersized, the repaired weld will likely be significantly larger than required as it is difficult, and often undesirable, to deposit the very small repair welds needed to bring the weld into size compliance.

AWS D1.1 permits up to 10% of the weld length to be slightly undersized, the amount being a function of the weld size. For example, 5⁄16-in. (8 mm) fillets are allowed to be 1⁄8 in. (3 mm) smaller than specified, if the length of undersized weld does not exceed 10%. Under these conditions, a 3⁄16-in. (5 mm) fillet weld is acceptable. AWS D1.1 does not extend this latitude to include the option of 20% of the weld being undersized by 1⁄16 in. (2 mm), although the effect on the capacity of a longitudinal fillet weld would be the same.

If an extensive quantity of slightly undersized welds have been made, it is possible to consider the suitability of the as-deposited welds. While the fabricator or inspector may not know, the engineer is in a position to determine the basis for the weld size. It may be that the loading requires a fillet weld with a leg that was merely 10% greater than a standard incremental size. For example, design loads may require a fillet weld with a leg of 0.275 in. (7 mm), so the next larger standard size was specified, in this case, 5⁄16 in. (8 mm). If in production, the actual weld leg size is undersized by 1⁄16 in. (2 mm) for the full length, the weld is not acceptable per AWS D1.1, Table 6.1, but the weld would actually be larger than required for design purposes.

The fillet weld size may have been specified based not on design loads, but on the minimum size requirements (see Section 3.5.1 of this Guide). In other situations, continuous welds may have been specified not for strength reasons, but for fatigue performance (see Section 12.3 of this Guide). Under these circumstances, a slightly undersized weld may meet all the serviceability requirements in the unrepaired condition. Aside from cost and schedule, a weld of otherwise acceptable quality, with the size being the only deficiency, may be preferable to a repaired weld.

When undersized welds must be repaired, additional metal is deposited on top of the undersized weld. If the initial undersized weld is significantly smaller than the specified minimum weld size (see Sections 3.4.2 and 3.5.1 of this Guide), it may be advisable to remove the portion of the weld that is undersized because it might have been made with inadequate heat input. However, in most cases, additional metal is simply added on top of the undersized weld. Welds with excessive concavity can also be repaired by depositing additional metal. These minor repairs that involve deposition of additional weld metal do not require the engineer's approval according to AWS D1.1, clause 5.25.1.2.

15.8.3 Excessive Undercut

Undercut is generally discussed in Section 9.5.2 of this Guide. The acceptability of undercut depends on its size, the direction of load application, the type of load (static versus cyclic), the length of the undercut, and the thickness of the members involved, as outlined in AWS D1.1, Table 6.1. There are two structural concerns associated with undercut: First, undercut may create a small, notch-like cavity that constitutes a stress raiser; second, severe undercut may reduce the net section of the base metal to an unacceptable level, particularly on thin members.

Excessive undercut can be repaired by depositing extra weld metal on the weld toe with the undercut, and AWS D1.1, clause 5.25.1.2, does not require minor repairs made in this manner to acquire the engineer's approval.

The repair weld must be made in a manner that does not recreate the undercut. As a result, the repair process and procedure are often different than the process used for the original welding. Vertical down-welding is an effective means for repairing small undercut voids. Normally, WPS that use vertical down welding are not prequalified, but an exception is made for repair of undercut as specified in AWS D1.1, clause 3.7.1.

For cyclically loaded structures where the weld is transverse to the applied tensile stress, AWS D1.1, Table 6.1, limits the undercut to 0.01 in. (0.25 mm), a dimension that for practical purposes is essentially zero. Making welds that limit undercut to this level can be a challenge and thus it is important to understand where this criterion applies and where it does not, the intention behind it, and how acceptable welds are sometimes misjudged as having excessive undercut.

Under some conditions, welds are rejected as having undercut in excess of the 0.01-in. (0.25 mm) limit when no such undercut exists. Consider the T-joint shown in Figure 15-6(a), which shows the pre-welding condition; the thick dark line on the surfaces of the steel represents tight mill scale that was not removed prior to welding, which is an acceptable condition. During welding, the thermal energy introduced by the arc will cause localized expansion and contraction and will frequently cause the brittle mill scale to

break away from the surface near the weld toe. Figure 15-6(b) shows the small void at the weld toe, which is not undercut but is a cavity left behind when mill scale flaked off during welding. Undercut is measured with tools that rest on the surface of the steel, or on the surface of the mill scale, and detect voids that are under the surface on which they rest. In the case illustrated in Figure 15-6(b), the weld contains no undercut, although such a weld might be rejected as having excessive undercut. In reality, what is being measured is the thickness of the mill scale, not undercut.

The 0.01-in. (0.25 mm) criterion is sometimes misapplied. AWS D1.1, Table 6.1, stipulates that it applies to cyclically loaded, primary members, when the weld is transverse to the tensile stress under any design loading condition. The term *primary member* may be subject to some dispute, particularly when interpreted and applied by the typical inspector. The engineer may be required to identify primary members when disputes arise as to where this undercut acceptance limit applies. The requirement that the weld be transverse to the tensile stress is often overlooked. For example, the 0.01-in. (0.25 mm) criterion should not be applied to longitudinal fillet welds used to make built-up plate girders because the weld is parallel to the primary stress.

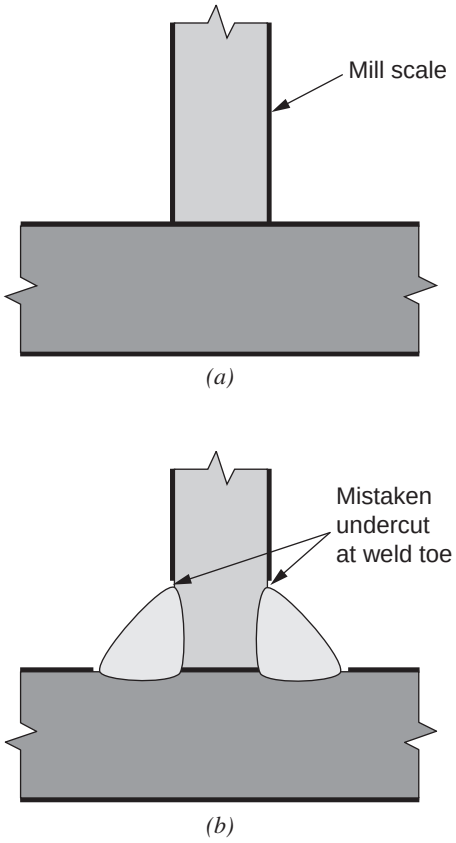

Fig. 15-6. Toe indication mistaken to be undercut.

Both fillet and groove welds may be transverse to the tensile stress. Normally, undercut is more of an issue with fillet welds that are made in the horizontal position compared to groove welds that are made in the flat position. When undercut limits are exceeded for transverse groove welds, light grinding of the weld toes is an effective means to eliminate the stress concentration associated with the notch. For Category B transverse groove welds where weld reinforcement is to be removed (see Section 12.3 of this Guide), minor undercut can be removed concurrently with weld reinforcement removal.

Figure 15-7 illustrates a concept that should be considered, although it is not in AWS D1.1. Figure 15-7(a) illustrates a fillet weld made in the horizontal position, and the likely location of undercut. If the T-joint is cyclically loaded as shown in Figure 15-7(b), and if this is a primary member, the undercut would be limited to 0.01 in. (0.25 mm). Figure 15-7(c) also depicts fillet welds made in the horizontal position, along with the likely location of undercut. However, when cyclically loaded, as shown in Figure 15-7(d), the undercut does not create the same stress raiser as would be the case shown in 15-7(b). In the second situation, the 0.01-in. (0.25 mm) criterion is probably not justified, although this distinction is not made in AWS D1.1.

15.8.4 Excessive Porosity

Porosity is generally discussed in Section 9.5.2 of this Guide. AWS D1.1, Table 6.1, states that limited quantities of porosity are acceptable, and the acceptance limits depend on the type of loading—static or cyclic. Welds with excessive porosity can be repaired by removing the unacceptable portions and restoring the removed material with quality weld metal. These are usually minor repairs and can be done without the engineer's approval; the only exception involves electroslag (ESW) and electrogas (EGW) welds and will be discussed separately.

When welds contain excessive levels of porosity, it is necessary to remove all the defective weld metal before repairs are made. However, only the weld metal that contains the excessive porosity must be removed; it is not necessary nor is it desirable to remove more weld metal than necessary. Defect removal is typically done with grinding or air carbon arc gouging.

For repairs made to ESW and EGW welds with internal defects, including porosity, the engineer is to be notified before repairs begin; internal defects would include porosity, as discussed in AWS D1.1, clause 5.25.3. Improper ESW procedures have in some cases resulted in porosity that is so extreme it continues for the full length of the weld. Further, conventional UT has in some cases been unable to detect such porosity, as discussed in AWS D1.5, Commentary Section C-6.7.1.1. Accordingly, the engineer's involvement with repairs to such welds is required.

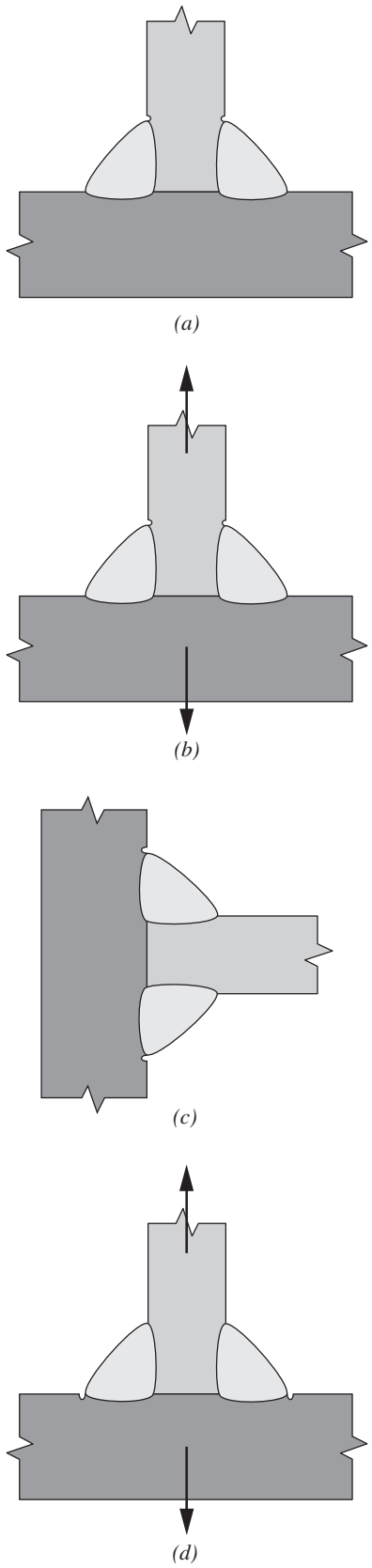

Fig. 15-7. Effect of undercut.

15.8.5 Excessive Convexity, Excessive Reinforcement and Overlap

Excessive convexity, excessive reinforcement and overlap are all defects that result from depositing more weld metal than necessary. Such defects are repaired by grinding away the excess metal; AWS D1.1, clause 5.25.1.1, states that these repairs do not need the engineer's approval.

15.8.6 Internal Defects Discovered by NDT

When internal defects are discovered by NDT, the defect must be removed, and the removed metal restored. Such defects include incomplete fusion, slag inclusions and internal porosity. Cracks may be detected by NDT as well; crack repair is discussed separately in Section 15.8.7 of this Guide. Locating and removing the defect can be a challenge; the goal is to remove the entire defect, but remove no more sound material than necessary. For structural steel applications, the NDT method will likely be UT; the combination of transducer location, scanning angles and other variables make it difficult to identify the precise location of the defect. Accordingly, a series of shallow excavations of weld metal with careful inspection of the cavity are appropriate. When the defect is identified, it is essential that it be completely removed before repair welding begins.

The resulting cavity created by the removal of the defective weld must provide a geometry conducive to good fusion. There must be ample access to the root of the joint with enough joint width to allow for manipulation of the electrode. The ends of the cavity should gradually taper into the base or weld metal. The cavities that result from defect removal are typically U-shaped in cross section. While not required by AWS D1.1, it is advisable to maintain a general profile similar to one of the prequalified U-groove details, which typically incorporate a minimum root radius of ¼ in. (6 mm) and a minimum included angle of 20°. The length of the tapered ends should be around 2.5 times the depth of the cavity, but this too is not prescribed in AWS D1.1. The cavity surfaces should be clean and free of notches and gouges; grinding the surface is an inexpensive way to make sure the cavity is ready for the repair weld.

15.8.7 Cracks

All cracks, regardless of size and orientation, are considered defects and are unacceptable according to AWS D1.1, Table 6.1. Cracks may be contained within the weld metal, the HAZ, or the base metal or may be in multiple regions. The practice of rendering all cracks unacceptable is a conservative position and generally reasonable, although it should be recognized that some cracks, such as those that are parallel to the direction of stress, may have no consequence on the performance of the structure.

When repairs of major or delayed cracks are required,

the engineer is to be notified before repairs are made (AWS D1.1, clause 5.25.3). The interpretation of major may be subject to dispute, but delayed cracking is usually associated with cold cracking (see Sections 6.2.2 and 6.2.3 of this Guide), and the cracking occurs sometime after welding is completed. Unlike the minor repairs that are made without the engineer's involvement, most cracks will be repaired only with the engineer's approval.

The whole crack must be removed. To ensure complete removal, the extent of cracking is to be determined with MT, PT, and acid etching or other methods; MT is probably the best option for most situations. Not only is the full length of the crack to be removed, but 2 in. (50 mm) of sound material beyond the end of the crack must also be removed (AWS D1.1, clause 5.25.1.4). While specifically mandated in the code, the 2-in. (50 mm) dimension was arbitrarily selected and, in some cases, is not justified. If a ½-in. (13 mm) segment of a weld is cracked, removal of an extra 2 in. (50 mm) from either end significantly increases the amount of repair welding that will be required. The principal issue is not the 2-in. (50 mm) dimension, but rather, complete removal of all the cracked material. Despite the confidence many welders will express, it is unlikely that subsequent welding will burn out the crack; removal of the whole crack is a more certain approach.

A crack that has totally severed a member will relieve all the residual or applied stress, but a member with a partial crack may be under considerable stress. While AWS D1.1 appropriately permits a variety of mechanical and thermal methods for crack removal, caution is recommended regarding thermal methods, particularly when the region to be repaired is under high residual stress. Thermal cutting, whether oxyfuel or arc gouging, has been known to cause small cracks to propagate into major cracks that require extensive repair. While the process is considerably slower, grinding is a more dependable process that is much less likely to cause cracks to propagate.

A commonly employed practice to keep a crack from extending involves drilling a hole at the end of the crack, but this is potentially problematic. This technique blunts the sharp edge of the crack, which is beneficial, but also necessitates a more complicated repair. The hole-drilling technique is very useful when cracks are not going to be immediately repaired or potentially never repaired. However, if the purpose of the work is to repair the crack, as is typical for new construction, the hole drilling approach is not preferred.

If the crack extends to the edge of a member but terminates within the member, a temporary weld near the edge of the member may be helpful in keeping the crack from opening and then running.

A helpful technique to mitigate crack running, regardless of the crack type and orientation, is to initiate arc gouging from sound steel or weld metal beyond the end of the crack, and gouge toward the crack. When the opposite approach is used, the metal that is heated and expanded may cause the crack to propagate. When repair welding is begun, it is preferred to first repair portions away from the point where the crack terminated; if the crack was not fully removed, the heat of welding can cause the crack to run.

15.9 HEAT SHRINKING OF Q&T STEEL

When camber is incorrect on a built-up member, heat straightening can be applied in accordance with AWS D1.1, clause 5.18.1, in order to correct for minor camber variations. When quenched and tempered (Q&T) steels are involved, AWS D1.1, clause 5.18.2, requires the engineer's approval for the correction of camber. More restrictive temperature limits apply for heat shrinking Q&T steels as compared to hot-rolled steels (see Section 14.15 of this Guide and AWS D1.1, clause 5.25.2), and thus the need for the engineer to approve such camber correcting methods. The engineer should review the contractor's heat shrinking plan, with specific attention to how temperatures will be monitored.

15.10 UNSPECIFIED WELDS

Unspecified welds are welds made on a structure that are not identified on contract, shop or erection drawings. AISC *Specification* Table N5.4-3 and AWS D1.1, clause 6.5.1, stipulate that the inspector is charged with making certain that no unspecified welds are added without the engineer's approval. There are a variety of legitimate reasons a weld may need to be added that was not contemplated at the time drawings were produced; the engineer can approve those additional welds after contract documents have been issued. The welds of concern that will be addressed in this section are those that have been added without the engineer's approval.

Tack welds and construction aid welds are separately discussed in AWS D1.1, clause 5.17, with specific provisions for dealing with each type of weld; these are not categorized as unspecified welds.

When unspecified welds are made, either a major error was made or a major problem has arisen that requires an alternative approach from that considered when the drawings were produced. The potential reasons for unspecified welds are so numerous that it is difficult to provide specific guidance as to how they should be handled. The following questions may be helpful in determining how to resolve issues associated with unspecified welds:

1. Why was the weld added?
2. Was the weld made on steels with good weldability?
3. Does the added weld change the load path for stress flow through the material?
4. Does the weld introduce stress concentrations or stress raisers?

5. What is the nature of loading?
6. Can the weld and the welded attachment be safely and economically removed?
7. Was the weld made properly, with proper procedures, electrodes, preheat, etc.?

Additional caution should be given to unspecified welds when the structure is subject to cyclic or seismic loading. In most cases, problematic unspecified welds can be removed and the localized area repaired by grinding.

15.11 WELDS MADE WITHOUT INSPECTION

The question of how to handle welds made without inspection occurs often enough to justify the inclusion of this topic: If the welding on a project is complete and no inspector was present to observe the welding process, are the welds acceptable?

Before addressing the acceptability of the welds made without an inspector present, it is sufficient to conclude that major code and specification compliance problems have occurred when fabrication or erection has occurred without inspection. AWS D1.1 and the AISC *Specification* both contain quality control functions assigned to the contractor that have not been fulfilled. Regardless of the reason for lack of conformance to these standards, various questions should be asked: Were the welders qualified? Were WPS followed? Was the proper electrode used? Was preheat applied? The lack of inspection may be only one of many problems.

Regarding the acceptability of the welds, it must be acknowledged that good welds can be made without inspectors present. While it is desirable for inspection of welding operations to occur before, during and after welding (see Section 10.2 of this Guide), the values of visual inspection of completed welds should not be discounted. NDT can be performed on completed welds, whether or not such welds were originally expected to be subject to NDT.

When welds meet all visual inspection criteria, the conditions under which the welding was performed can be retroactively examined. Welder qualification records and WPS can be requested. Welding equipment and consumables on site may provide circumstantial evidence of how the welds were likely made. If the available evidence suggests that the only infraction was the lack of an available inspector when the fabrication was performed, greater confidence can be placed in the suitability of the weld. However, if each new discovery reveals another infraction, further inspection, or weld repair or replacement may be necessary.

15.12 WELDING ON ANCHOR RODS

15.12.1 Weldability of Anchor Rods

Before any welding on anchor rods is considered, the weldability of the rod must be considered (see Section 5.4.14 of this Guide). Material with unknown chemical compositions or poor weldability simply should not be welded upon until appropriate analysis and testing has been performed.

15.12.2 Extending Anchor Rods

When an anchor rod is set too deep, there may be an inadequate length of thread available for proper engagement of the nut. In extreme conditions, the end of the anchor rod may be below the top surface of the base plate. Possible solutions that involve welding are often offered, but such approaches must be carefully evaluated.

Before any work is done, the column must be stabilized if work is to be done with the column in place. If the anchor rods are too short, the column usually will need to be removed to provide access to the anchor rod extension.

Even when an anchor rod with good weldability is involved, several commonly proposed corrective concepts are problematic. For example, if the rod is very short, it may be tempting to use a plug weld in the base plate to weld on to the end of the anchor rod. However, plug welds are intended to be loaded in shear, not in tension. When there is insufficient thread for full nut engagement, one may contemplate welding the nut to the rod. Nuts are always hardened materials and typically have poor weldability (see Section 5.4.12 of this Guide). Additionally, the inside surface of the nut is threaded, which makes it a poor surface on which to consider welding.

Before welding is considered, mechanical fastening options should be exhausted. For example, in some cases, it is possible to machine a recess into the top surface of the base plate, allowing the nut to be installed in the normal manner. Where holes in the anchor plate can be enlarged, a coupling nut can be used to mechanically add an extra length of anchor rod. Another approach is to replace the existing anchor rods with new epoxy-type anchors.

When an anchor rod is extended by welding, and when the weldability of the anchor rod has been established, good splice details must be developed. Welding small-diameter, cylindrical parts end-to-end with the goal of achieving full fusion is a significant challenge due to the geometry involved. Compounding this difficulty is the welder's limited access to the joint because the splice location is often only a short distance above the ground, requiring the welder to lie prone when making the weld.

A connection detail has been developed to address some of the problematic aspects associated with anchor rod extension (Fisher and Kloiber, 2006). The weld joint involved is a double-sided horizontal bevel groove weld. The extension rod is prepared by applying two bevels that form a chisel-like configuration (not a pencil point) as shown in Figure 15-8. A ring or washer is made from steel with good weldability and of a sufficient thickness to prevent melt-through. The top surface of the ring is positioned so that it is flush with

the too-short rod. The ring acts as a weld tab, allowing the arc starts and stops to be placed outside of the width of the anchor rod. As with prequalified double-sided welds, the root region of the first weld pass should be backgouged before the second side is welded. When the welding is complete, the ring can be removed by grinding or other methods and finally, the weld can be ground flush around the perimeter.

Welding is typically performed with SMAW using electrodes with low-hydrogen coatings, although other processes can be used. The strength of the electrode must be selected to match the strength of the anchor rod used. Depending on the anchor rod composition, preheat may be required.

15.13 WELDING ANCHOR ROD-TO-BASE PLATES

If the unthreaded portion of the rod extends above the top of the base plate, it will be impossible to tighten the rod unless other measures are taken. Welding of the anchor rod to the base plate may be an option, but other options should also be considered. The column must be stabilized if the work is done with the column in place; when anchor rods are too long, it is possible that corrective action may be done with the column in place. Anchorage of the rod in the concrete should be investigated; unless the rod was cut long, the extra exposed length implies that less rod is buried in the concrete. Potential mechanical solutions could include the use of a stack of washers or a pipe washer. In some cases, new epoxy-type anchor rods can be installed.

If these options are not feasible, welding the anchor rod to the base plate is a possible option, in which case the weldability of the anchor rod must be investigated. Even if the weldability proves to be acceptable, welding the anchor rod to the base plate will not tension the rod as would be the normal condition when the anchor rods are tensioned with the use of nuts. Anchor rods can be welded directly to base plates, but because the holes into the base plate are larger than the anchor rod diameter, a gap will exist between the two. A preferred approach is to cut a heavy washer from a known and weldable material and install around the rod, and then a fillet weld can be used to join the rod to the washer (AISC, 1997).

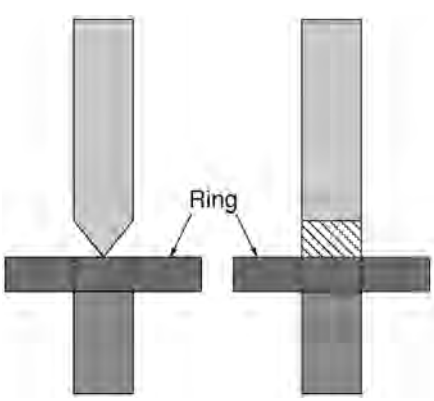

Fig. 15-8. Anchor rod extension detail.

In addition to the anchor rod, the base plate composition and any preheat requirements must be considered. The preheat required may be controlled by the base plate due to the typical thicknesses involved, even though the anchor rod may have the richer chemical composition. A variety of welding processes may be used for these operations, but due to the limited amount of welding involved, SMAW is typically used along with electrodes with low-hydrogen coatings.

15.14 REMOVING AND REINSTALLING COLUMN BASE PLATES

Base plates are occasionally installed on a column incorrectly, such as rotated 90° from the proper orientation. This particular problem can be avoided by using a square and symmetrical pattern for the anchor rod layout. In other situations, anchor rods may be improperly placed, perhaps in the correct pattern, but the entire hole pattern is improperly located. In other cases, an individual rod or more may be mislocated outside the perimeter of the base plate. Other possible fixes, as discussed in AISC Design Guide 1 (Fisher and Kloiber, 2006), include slotting the holes in the base plate (the most common repair) or cutting off the existing anchors and replacing them with epoxy-type anchors.

Regardless of the reason, it may be necessary to remove and reinstall column base plates to accommodate unexpected conditions. Because the column was, presumably, saw-cut or otherwise finished to bear on the base plate, preserving the finish of this contact surface should be the top priority. The squareness and smoothness of a saw-cut surface cannot be replicated with a hand-guided torch in the field. Therefore, rather than cut through the column, it is usually best to remove the welds. This can be done by careful arc gouging. Weld penetration varies with the welding process and procedures; therefore, it will be difficult to predetermine the required gouge depth into the column and base plate. When the depth of the cut nears the expected weld root, grinding is a good method to remove the remaining material without removing more metal than necessary.

After the column and base plate are severed, depending on the circumstances associated with the situation, the base plate can be inverted so that the previously welded surface will become the underside of the base plate. Before this is done, residual welds and any gouges should be ground smooth. When inversion of the base plate is impossible, the region where the weld was removed can be ground and gouges repaired by welding as needed. The column edges can be reprepared for welding.

These types of repairs will likely be done in the field by the erector. The same general types of fabrication procedures that were used for shop fabrication of the column-base plate

assembly need to be followed, including the use of preheat when required for thick base plates. Inspection should be at least the same as what was used for the initial weld, and extra inspection may be required to make certain the unexpected welding was performed correctly.

15.15 REPAIRING LAMELLAR TEARS

Lamellar tearing is discussed in Section 6.4 of this Guide. When lamellar tearing occurs, repairs need to be approached with caution. The presence of lamellar tears is proof that the combination of variables that prevent such tearing (design, materials, detailing and fabrication) were collectively insufficient to overcome lamellar tearing tendencies. Importantly, when repairs are contemplated, it must be acknowledged that the specific steel in the assembly has been previously strained by weld shrinkage, and any repair welding will be done under even less desirable conditions than the original fabrication.

Because lamellar tears occur in the base metal, AWS D1.1, clause 5.25.3, requires the engineer to be notified before repairs begin. The direction of service loading as compared to any lamellar tears or indications will strongly influence whether corrective actions are required. Because lamellar tearing generally occurs due to through-thickness shrinkage strains, and because the direction of rolling often coincides with the direction of loading, the lamellar tears may be parallel to the direction of stress. Under these conditions, inclusions discovered after welding may be acceptable as is, without any required repair; larger inclusions may be removed by grinding and left as is without repair welding. The engineer must assess these options for the specific situation involved.

Lamellar tears that are perpendicular to the direction of service loads are of much greater concern and will require repair. In extreme situations, the member that experienced the lamellar tearing may need to be replaced.

Lamellar tears will naturally be located in a region of residual stress, and it is preferable to use grinding to remove such tears as compared to thermal means; arc gouging can cause additional lamellar tearing to occur. In the case of severe lamellar tearing where large and long cracks have formed, the residual stresses are likely minimal, because they have been relieved by the tearing, and gouging may be used.

Weld repairs should be made with weld metal that is as soft as possible, meaning that it has a low yield and tensile strength. While all E70 (E48) filler metal grades have similar specified minimum tensile strengths, the actual strengths, as reported on the filler metal manufacturer's certificate of conformance, may have significantly higher properties than the minimum requirements; use of filler metals with lower reported values is desirable. Higher levels of preheat than used in the initial production weld may be helpful, followed by slow cooling and possibly post heat (see Section 8.8.11 of this Guide). Peening of weld beads may be helpful, as discussed in AWS D1.1, clause 5.26. The purpose of all these precautions is simple—what was done for the initial welding was not sufficient to overcome lamellar tearing tendencies and thus extra precautions are necessary. Further, and importantly, if the first repair attempt is not successful, then subsequent repair attempts will be made under even less desirable conditions.

A steel diagrid defines Hearst Tower near Central Park in Manhattan, New York.

Chapter 16
The Engineer's Role in Welded Construction

16.1 INTRODUCTION

AWS D1.1, clause 6.8, states that "the fundamental premise of the code is to provide general stipulations applicable to most situations." To this premise must be added the reality that many structures are unique, and the general stipulations specified in AWS D1.1 may need modification to accommodate the specific needs of a given structure. Accordingly, AWS D1.1, clause 1.4.1, extends this authority to the engineer: "The Engineer may add to, delete from, or otherwise modify, the requirements of this code to meet the particular requirements of a specific structure."

The engineer's involvement in the construction process includes the following:

1. Selection of applicable codes
2. Production of contract documents
3. Consideration of joint detail suitability
4. Specification of options
5. Requesting documentation
6. Approving standard items
7. Specification of engineer-initiated alternatives
8. Evaluation of contractor-initiated alternatives
9. Handling unexpected construction difficulties
10. Development of specifications for work on existing structures

These topics are discussed in the subsequent sections; the coverage that follows is not comprehensive but addresses common issues and provides general guidance that should be considered by the engineer when these issues arise.

16.2 SELECTION OF APPLICABLE STANDARDS

Perhaps the engineer's most important welding-related function—although one that is not explicitly identified in AWS D1.1—is to ensure that the proper welding code is selected for a specific project. Building projects involving steel shapes and plates should be welded in accordance with AWS D1.1, while sheet metal structures should be welded in accordance with AWS D1.3 (AWS, 2008), which also covers welding of sheet steel to structural steel. When the structure is specifically designed to resist seismic loads in accordance with the AISC *Seismic Provisions* (AISC, 2016c), AWS D1.8/D1.8M *Structural Welding Code—Seismic Welding Supplement* (AWS, 2016) should be invoked. Welding-related issues associated with steel bridges are governed by AWS/AASHTO D1.5/D1.5M (AWS, 2015a). Various welding codes are discussed in Section 1.3.1 of this Guide. When the AISC *Specification* (AISC, 2016d) is specified, all of AWS D1.1/D1.1M is automatically invoked, with a few exceptions that are listed in AISC *Specification* Section J2. When the AISC *Seismic Provisions* are specified, AWS D1.8/D1.8M is automatically invoked in Section A2.

AWS D1.1 may be suitable to govern fabrications outside the scope of the intended purpose; however, the engineer should evaluate such suitability and incorporate into contract documents any necessary changes to code requirements to address the specific requirements of the application that fall outside the scope of the code (AWS D1.1, clause 1.2). Issues to consider include the basic material type (e.g., steel versus aluminum), thickness of material, loading type (e.g., static, cyclic or blast), type of welding process, and other standards that are involved (AISC versus other structural standards). Formerly, AWS D1.1 explicitly stated that the code was not intended to be used for steels with $F_y > 100$ ksi (690 MPa), steels thinner than ⅛ in. (3 mm), and for pressure vessels and pressure piping (AWS, 2006). While these specific limitations have been removed and the content rephrased in terms of a positive statement (i.e., what the code is intended to cover versus what it is not intended to cover), the advice of the older code is still sound.

16.3 PRODUCTION OF CONTRACT DOCUMENTS

Contract documents are defined in the AISC *Code* Glossary as "the documents that define the responsibilities of the parties that are involved in bidding, fabricating and erecting structural steel. These documents normally include the design documents, the specifications and the contract" (AISC, 2016a). The engineer is responsible for the production of contract documents, and has the latitude and the responsibility to add to the contract documents any provisions not addressed in the code, but necessary for the specific project in accordance with AWS D1.1, clause 1.4.1.

AWS D1.1 requires the following items to be included in contract documents:

1. Code requirements that are applicable only when specified by the engineer
2. All additional NDT that is not specifically addressed in the code
3. Verification inspection, when required by the engineer

4. Weld acceptance criteria other than that specified in clause 6
5. CVN toughness criteria for weld metal, base metal, and/or the HAZ when required
6. For nontubular applications, whether the structure is statically or cyclically loaded
7. All additional requirements that are not specifically addressed in the code
8. For original equipment manufacturers (OEM) applications, the responsibilities of the parties involved

Item 1 of the preceding list will be discussed in Section 16.5 of this Guide; the other items will be reviewed in this section.

16.3.1 Weld Inspection Issues

Inspection issues are primarily addressed in AWS D1.1 clause 6 and AISC *Specification* Chapter N. Since Chapter N was first included in 2010, the role of the engineer in specifying weld inspection issues has significantly changed. A brief summary of AWS D1.1 requirements and those of Chapter N will be presented first, followed by a discussion of how the two interact in 2016.

AWS D1.1, clause 1.4.1(2), charges the engineer to specify nearly all nondestructive testing (NDT) requirements. Alternately stated, AWS D1.1 has nearly no NDT requirements and leaves it up to the engineer to specify all requirements. The conditional phrase of nearly as used in the previous sentences is to account for a few deviations from the norm. In terms of volumetric NDT, for cyclically loaded, transverse tension splices, NDT is required for fatigue Category B and C details (see Section 12.5 of this Guide). In some specialized situations, penetrant testing (PT) or magnetic testing (MT) inspection is required. However, the general practice of AWS D1.1, clause 1.4.1(3) requires the engineer to determine which welds receive NDT and to specify when verification inspection [or quality control (QC) inspection] is required.

AISC *Specification* Chapter N is discussed in Section 10.9 of this Guide. Chapter N has provided quality assurance (QA)/QC requirements that are "…adequate and effective for most steel structures…" Accordingly, for inspection of most routine buildings, the specification of the AISC *Specification* automatically results in the specification of the NDT requirements of Chapter N. Similarly, for seismic applications, the specification of the AISC *Seismic Provisions* automatically results in the specification of the NDT requirements of Chapter J.

When either AISC *Specification* Chapter N or AISC *Seismic Provisions* Chapter J is invoked, the important role of the engineer is to determine if the prescribed inspections are adequate or excessive. For the present discussion regarding the role of the engineer and the requirements of AWS D1.1, citing AISC *Specification* Chapter N should be adequate for most structures.

16.3.2 Alternate Weld Acceptance Criteria

Acceptance criteria for welds, different from those prescribed in AWS D1.1, are permitted to be used with the engineer's approval as stipulated in AWS D1.1, clauses 1.4.1(4), 6.5.3 and 6.8. The alternate weld acceptance criteria may be either more or less rigorous as explained in Section 9.3 of this Guide. The engineer may use past experience, experimental evidence or engineering analysis as the basis for the alternate weld acceptance criteria.

The proposer could be the engineer, and when this is the case, the alternatives should be specified in the contract documents. The proposer may also be the contractor, in which case, the engineer would be called upon to evaluate and approve the suitability of the alternate criteria. In case of the latter, a common use of this option is to permit the acceptance of less-than-perfect welds that are nevertheless expected to be acceptable for a given application. The engineer's challenge is to use past experience, experimental evidence or engineering analysis to make certain the proposal is applicable to the situation at hand. Among the facts that should be considered are the type of loading (e.g., static, cyclic or blast), basic material type (e.g., steel versus stainless steel), material strength level, material thicknesses, and welding processes.

16.3.3 Charpy V-Notch Toughness Criteria

The engineer is to specify in the contract documents the Charpy V-notch (CVN) toughness testing requirements when required for the application as required by AWS D1.1, clause 1.4.1(5). Three materials are mentioned: weld metal, heat affected zone (HAZ), and base metal.

The first decision to be made involves whether CVN toughness requirements are necessary for the project. The topic of fracture is discussed in Chapter 13 of this Guide. While AWS D1.1 does not mandate fracture toughness requirements for specific applications, the AISC *Specification* does so for specialized situations. The AISC *Seismic Provisions* specify CVN toughness requirements for weld metal for certain weld types. When these standards are specified, and if no additional fracture toughness criteria are required, the engineer need not specify any additional requirements.

When fracture toughness levels beyond those specified in the AISC *Specification* or *Seismic Provisions* are required, the second decision faced by the engineer involves the nature of how minimum requirements will be specified in the contract documents. Two approaches are permitted for weld metal fracture toughness. One method is to specify that the filler metal be capable of delivering weld metal with specified minimum CVN values, as required by the filler metal

classification testing. The second approach involves WPS qualification testing, complete with weld metal CVN tests. If HAZ CVN testing is required, the second approach is required by AWS D1.1, clause 2.3.2. AWS D1.1 does not provide base metal CVN testing criteria.

Specifying that the filler metal used on a project have specified minimum CVN properties based on the filler metal classification test is the simplest approach and can be done with the least effect on project cost and time schedule. This is not to say that there will be no cost associated with such an approach; in general, filler metals without minimum CVN toughness requirements cost less and can be deposited more rapidly. However, this method allows the contractor to use prequalified WPS (versus qualifying WPS by test), and the required documentation of filler metal properties is easily obtained.

The use of filler metal with prescribed CVN properties as determined by filler metal classification tests does not automatically equate to notch tough weld metal (see Section 11.5.2 of this Guide). For applications where additional assurance is desired, WPS qualification testing can be specified as stipulated in AWS D1.1, clause 2.3.2; such qualification testing will evaluate the combined effect of the contractor's selected WPS values and the selected filler metal. Also, when heat affected zone CVN results are desired, the qualification test plate can include HAZ CVN testing. Qualification testing is not prohibitively inexpensive, and depending on the project, multiple qualification tests may be required. Project cost and schedule can be affected.

When filler metals with a classification that includes CVNs are desired, the engineer must specify the minimum absorbed energy and test temperature. Unless required for other reasons, a common practice is to specify 20 ft-lb at 0°F (27 J at −18°C) because this will include most filler metals that are classified with CVN requirements, yet precludes all filler metals that have no required specified minimum CVN requirements.

For WPS qualified by test, the engineer is required by AWS D1.1, clause 2.3.2, to specify the minimum absorbed energy and test temperature. Selection of the appropriate energy and testing temperature requires some judgement; the concepts presented in Section 13.7 of this Guide should be helpful. The filler metal classification criteria such as 20 ft-lb at 0°F (27 J at −18°C) are arbitrary and not application specific; when WPS qualification testing is required, application specific criteria can be used. In most situations, this will involve a change in the testing temperature. Regardless of how the criteria are developed, the minimum absorbed energy and test temperature are to be specified.

While AWS D1.1, clause 2.3.2, requires specification of both minimum absorbed energy and test temperature, clause 4.28.1 and Table 4.14 contain a default minimum absorbed energy level for steels with $F_y \leq 50$ ksi (345 MPa); alternate values can be specified in contract documents. For steels with $F_y > 50$ ksi (345 MPa), no default minimum absorbed energy level is provided; values must be specified in contract documents.

It is permitted to specify CVN criteria beyond minimum absorbed energy levels, such as percent ductile fracture and lateral expansion. These measurements are of interest to researchers but not typically specified for structural steel applications.

For HAZ testing, two CVN notch locations are specified: fusion line (FL) plus 1 mm (designated as FL+1) and FL plus 5 mm (AWS D1.1, Table 4.14). The so-called HAZ is probably more accurately discussed in the plural because there are multiple regions within the HAZ. Four such regions are typically identified, and depending on the variables involved, the lowest fracture toughness is not always in the same location. Experience has shown, however, that the FL+5 location is typically outside the HAZ and actually in the base metal for most arc welding processes and typical procedures, with ESW and EGW deviating from this pattern. A second location of FL+3 is more likely to reveal HAZ properties than is the code-mandated location of FL+5.

16.3.4 Static versus Cyclic Loading

For both statically and cyclically loaded members, AWS D1.1, clause 1.4.1(6), requires that the nature of loading on a specific project be identified in the contract documents. Two pieces of fabricated steel may be identical in appearance, but if one is destined for static service and the other for cyclic service, the applicable fabrication requirements for the two members will be different. Accordingly, this information must be specified in contract documents. Cyclic loading, which may lead to fatigue, is discussed in Chapter 12 of this Guide.

When cyclic loading is applied, AWS D1.1, clause 2.13.3, and AISC *Specification* Appendix 3, Section 3.1 stipulate that the engineer "...shall provide either complete details, including weld sizes, or shall specify the planned cycle life and the maximum range of moments, shears, and reactions for the connections." The first option is provided for the engineer to provide all the connection details, while the second option allows a detailer to design the connection. Although incorporating this information into the design drawings is not specifically required, it is the normal convention to do so.

16.3.5 Items Not Specified in the Code

This general requirement requires no expansion; if the project requires something that is not specified in AWS D1.1, then clause 1.4.1(7) requires that item to be specified in the contract documents.

16.3.6 OEM Applications

As used in AWS D1.1, and defined in clause 1.3.4, an original equipment manufacturer (OEM) is "that single Contractor that assumes some or all of the responsibilities assigned by this code to the Engineer." The term applies to products designed, built and inspected by a single entity; it generally does not apply to typical buildings but may apply to metal building systems. Components that become part of the structural system such as joists, expansion joints and bearings, and bonded braces are examples of fabricated components where the concept of the OEM can be applied.

For products or components that are designed and built by a single entity, the distinction between those tasks traditionally assigned to the engineer and the contractor or component supplier becomes blurred. For such applications, the responsibilities of all the parties involved are to be specified in the contract documents as stipulated in AWS D1.1, clause 1.4.1(8). Possible relationships between the parties are discussed in the AWS D1.1 Commentary.

16.4 CONSIDERATION OF JOINT DETAIL SUITABILITY

The prequalified joint details listed in AWS D1.1 "...have repeatedly demonstrated their adequacy in providing the conditions and clearances necessary for depositing and fusing sound weld metal to base metal. However, the use of these details in prequalified WPS shall not be interpreted as implying consideration to the effects of the welding process on material beyond the fusion boundary, or suitability for a given application" (AWS D1.1, clause 2.3.5.4). Further, "the use of prequalified joints and WPS does not necessarily guarantee sound welds" (AWS D1.1, Commentary Section C3.2.1). In other words, just because a weld detail is prequalified, it does not follow that the prequalified details is suitable for all applications. Accordingly, AWS D1.1, clause 1.4.1, requires the engineer to "…determine the suitability of all joint details to be used in a welded assembly."

The background that led to the incorporation of these requirements provides an understanding of the issues involved. In Figure 16-1, several versions of the prequalified complete-joint-penetration (CJP) groove-weld detail TC-U4a are shown. Because thickness T_1 and T_2 are unlimited, and because there is no prescribed relationship between T_1 and T_2, then the combinations in Figure 16-1(a)–16-1(c) are all possible and are all prequalified. In Figure 16-2, the same prequalified joint detail has been configured in a cruciform arrangement, with attachments on either side of a common member; all three of the combinations shown in Figure 16-2(a)–16-2(c) are possible and all are prequalified. In the case of the T-joints shown in Figure 16-1, the weld shrinkage may draw one or both plates in toward each other to accommodate the strains created by the weld shrinkage.

In the case of the cruciform configurations shown in Figure 16-2, the weld shrinkage strains will be twice as great as are the corresponding examples in Figure 16-1. The restraint of each subsequent example in Figure 16-2 will be greater than the previous [i.e., Figure 16-2(c) has more restraint than Figure 16-2(a)]. Importantly, the weld shrinkage in the example shown in Figure 16-2 will be concentrated in the through-thickness direction of the plate in the center. Ductility of steel in the through-thickness direction is typically the lowest as compared to the other orthogonal directions (see Section 5.3.4 of this Guide).

The application that prompted the cautionary language is shown in Figure 16-3. The connection was severely restrained, and during field erection, lamellar tearing was experienced in the plate between the two groove welds (see Section 6.4 of this Guide). This problem occurred despite the fact that the joint detail was prequalified.

In order for the prequalified joint details to provide the conditions and clearances necessary for depositing and fusing sound weld metal to base metal, consideration has been given to sizes of gas nozzles for shielding gas, coating diameters for SMAW electrodes, and other production concerns. In terms of weld quality, the joints are configured to encourage consistent fusion and have root geometries that discourage width-to-depth ratio cracking (see Section 6.3.1 of this Guide). As shown in Figure 16-3, the prequalified joint accomplished these goals—the weld was soundly fused to the base metal. Still, the welded connection is unacceptable.

The problem illustrated in Figure 16-3 occurred in base metal that was beyond the fusion boundary. Had lamellar tearing not occurred during erection, the suitability of the connection with through-thickness loading may have become problematic. The repair that was instituted to fix the lamellar tearing also eliminated the base metal that was loaded in the through-thickness direction, replacing the base metal with weld metal.

As a result of this experience, this caution was added to AWS D1.1 in clause 2.7.3: "T- and corner joints whose function is to transmit stress normal to the surface of a connected part, especially when the base metal thickness of the branch member or the required weld size is ¾ in. (19 mm) or greater, shall be given special attention during design, base metal selection and detailing."

It is impossible for the AWS D1.1 code, or for this Guide, to identify all the possible problematic situations that might arise in welded connections made with prequalified joint details. The principles of welded connection design as presented in Section 4.1 of this Guide can be applied to help determine the suitability of prequalified joint details for specific applications.

A primary concern regarding the suitability of prequalified weld joints involved through-thickness loading and the potential for lamellar tearing; the principles contained in

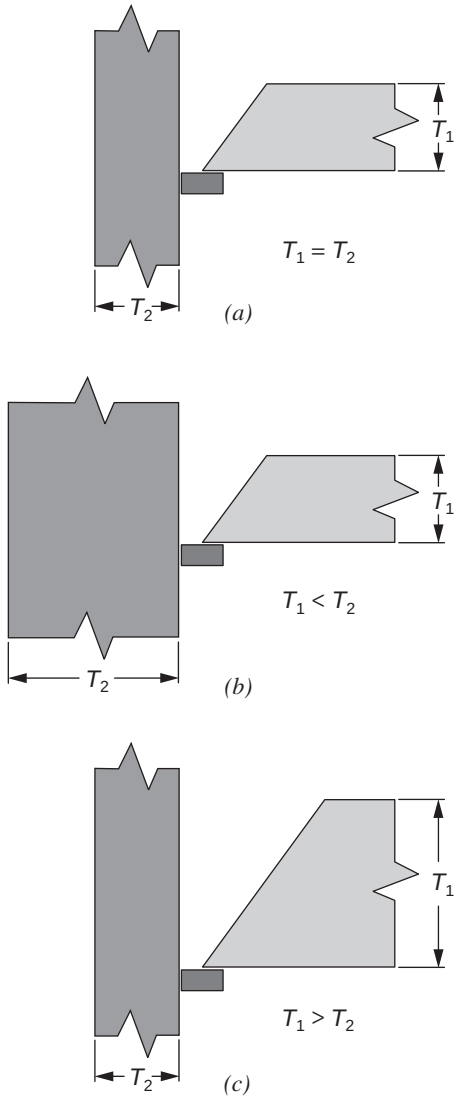

Fig. 16-1. T-joints with TC-U4a prequalified joint details.

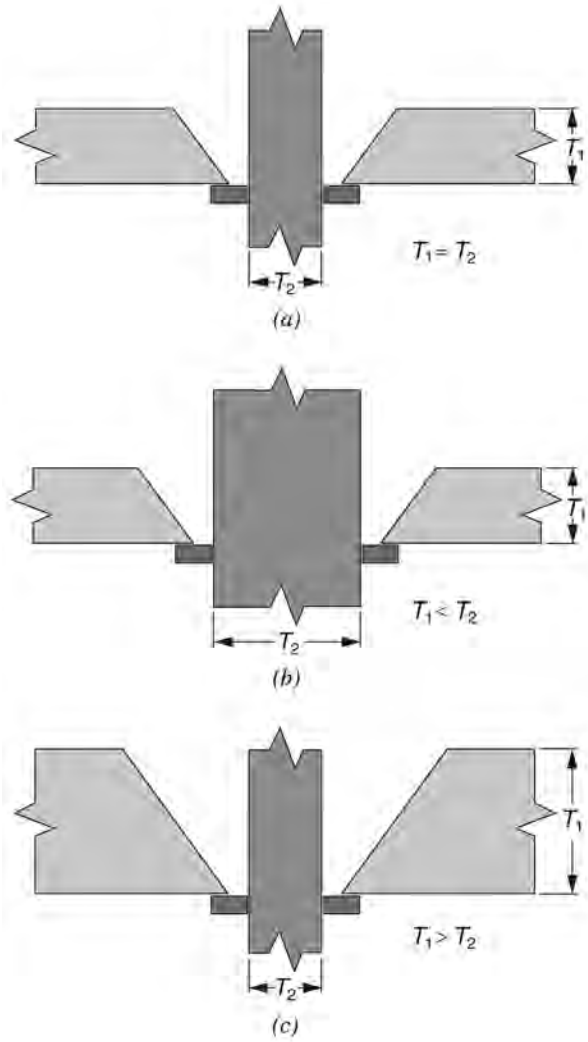

Fig. 16-2. Cruciform joints using TC-U4a prequalified joint details.

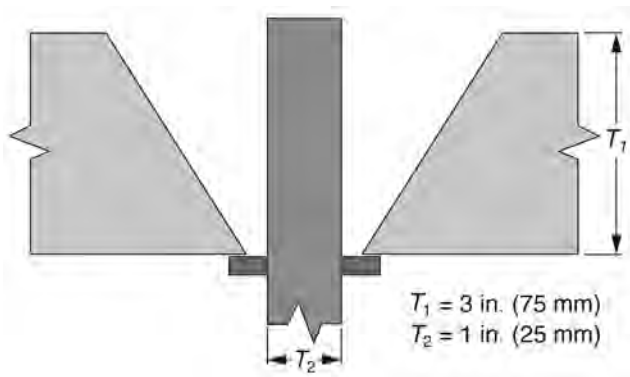

Fig. 16-3. A prequalified TC-U4a joint with excessive thickness differences.

Section 6.4 of this Guide can be applied to mitigate these concerns. Finally, the AWS D1.1 Commentary supplies the following list of items to be considered when evaluating connection details:

1. The effect of restraint imposed by rigidity of connected base metal on weld metal contraction
2. The potential for causing lamellar tearing by large weld deposits under restrained conditions on base metal stressed in the through-thickness direction
3. Limitations on welder access to the joint for proper positioning and manipulation of the electrode imposed by base metal nearby but not part of the joint
4. The potential for biaxial or triaxial state of stress at intersecting welds
5. Limitations on access to allow reliable ultrasonic testing (UT) or radiographic testing (RT) inspection
6. Effect of tensile residual stresses from weld shrinkage
7. Effect of larger than necessary welds on distortion

16.5 SPECIFICATION OF OPTIONS

AWS D1.1 provides for various options that are applicable only when specified by the engineer. An acceptable detail for one type of structure may not be acceptable for another. The type of loading may be a major factor in determining such acceptability. These options are made applicable when specified in the contract documents.

16.5.1 Steel Backing Removal

Steel backing is discussed in Section 3.3.1 of this Guide. For statically loaded structures, all steel backing is permitted to stay in place, regardless of the direction of loading, unless required to be removed by the engineer as stipulated in AWS D1.1, clause 5.9.1.5.

For cyclically loaded structures, backing is required to be removed from joints that are transverse to the direction of computed stress, with two exceptions, which are shown in AISC *Specification* Appendix 3, Table A-3.1, Example 5.5; steel backing on welds that are parallel to the direction of stress is permitted to stay in place unless its removal is specified by the engineer as stipulated in AWS D1.1, clause 5.9.1.4.

In the AISC *Seismic Provisions* and the AISC *Prequalified Connections* (AISC, 2016b), certain connection details are required to have weld backing removed (see Chapter 11 of this Guide). Weld backing removal is required for many AESS applications, as stipulated in AISC *Code* Section 10.6(e). When backing removal is required and not addressed in AWS or AISC specifications, this option must be specified in the contract documents. One principal issue that should be considered in determining whether backing removal is necessary or not is whether the left-in-place backing will create a notch effect in the weld root when subject to design loads.

16.5.2 Weld Tabs

Weld tabs are discussed in Section 4.2.1 of this Guide. For statically loaded connections, weld tabs are permitted to remain in place as stipulated in AWS D1.1, clause 5.30.2. For cyclically loaded connections, weld tabs are required to be removed as stipulated in AWS D1.1, clause 5.30.3. Weld tabs are typically removed for AESS applications as specified in AISC *Code* Section 10.6(e). The AISC *Seismic Provisions* require weld tab removal in certain situations. When weld tabs are required to be removed for other reasons, the removal specification is required in the contract documents.

Aside from aesthetics, the potential concern with left-in-place weld tabs is associated with the planar discontinuities created by the lack of fusion planes that will naturally occur between the weld tab and the surrounding steel. In many cases, the plane of concern will be parallel to the stress direction and of little consequence in a statically loaded structure. In some situations, tab removal may be difficult and could potentially induce additional problems.

For statically loaded structures, when the structural steel is covered with fireproofing and hidden within walls, tabs are typically left in place as a cost-saving measure.

16.5.3 Removal of Tack Welds and Construction Aid Welds

Tack welds that are not part of the final weld and construction aid welds are required to be made to the same quality criteria as final welds. In general, such welds are permitted to be left in place and are not required to be removed as stipulated in AWS D1.1, clause 5.17.1. Three exceptions to this practice exist, and under the following conditions, tack welds outside the final weld and construction aid welds must be removed:

- The weld is in a tension zone on a cyclically loaded member [AWS D1.1, clause 5.17.2(1)].
- The weld is made on quenched and tempered steel with $F_y \geq 70$ ksi (485 MPa), unless approved by the engineer [AWS D1.1, clause 5.17.2(2)].
- The weld removal is required to be approved by the engineer (AWS D1.1, clause 5.17.3).

Tack welds outside the final weld, as well as welds that are used to join attachments such as strongbacks, have been sites of fatigue crack initiation when structures are subject to cyclic loading, even when such welds are properly made. Thus, the first exception to the pattern of leaving quality

tack welds in place is in tension regions of cyclically loaded structures.

When welding on higher-strength quenched and tempered steels, the rapid cooling rate associated with improperly made tack welds or construction aid welds may result in localized cracking or unacceptable hardening around such welds. When the tack welds are properly made, these concerns are eliminated. Accordingly, the standard practice is to prohibit left-in-place tack and construction aid welds, but there may be a compelling reason they should be allowed to remain; the engineer can permit them to remain when it is known that proper procedures and practices have been used.

The AISC *Seismic Provisions* prohibit tack welds and construction aid welds in the protected zones of frames designed to resist seismic loading (see Section 11.5.7 of this Guide). Tack welds are typically ground smooth for AESS applications as specified in AISC *Code* Section 10.6(d). When other tack welds or construction aid welds are required to be removed in situations not addressed in AWS D1.1 or AISC specifications, this must be specified in the contract documents.

16.6 REQUESTING DOCUMENTATION

AISC *Specification* Section N3.2 lists the documents that are to be supplied to the engineer, which include the welding-related documents such as welding consumable certifications, manufacturers' welding electrode data sheets, headed studs certifications, WPS, PQR, and welding personnel performance qualification records. In AWS D1.1, the engineer is generally required to request such documentation. With the introduction of Chapter N, it is now the contractor's responsibility to deliver such certifications, eliminating the need for the engineer to specify the submittal of these routine items.

16.7 APPROVING STANDARD ITEMS

Some items that require the engineer's approval are typically approved as routine. Included is the following:

Approval of Prior Welder Qualifications

Contractors are required to make certain welding personnel are qualified as stipulated in AWS D1.1, clause 4.2.2.2. For established contractors with stable workforces, the welders will usually have passed previous welder qualification tests. The engineer can accept prior welder qualification tests, eliminating the cost and time delay associated with requalification of welding personnel, as stipulated in AWS D1.1, clause 4.2.2.1. This is a common practice, but it is subject to the engineer's approval. Some contractors bid projects contingent on the acceptance of previous welder qualification tests. When the engineer rejects this option, the contractor will incur significant costs because each welder must be qualified for each process and for each position in which welding is performed.

Approval of previous welder qualifications does not eliminate the need for welder qualification, and it is not unusual for a specialized project to require a welder qualification that has not been previously performed. For example, for seismic projects governed by AWS D1.8, a special restricted access qualification test is required for certain connections (see Section 11.5.2 of this Guide). A contractor who has never done work to AWS D1.8 will not likely have examples of previous welder qualifications for this situation; under such conditions, there is no previous welder qualification for the engineer to accept, and the welder will need to take and pass the applicable qualification tests.

Unless there is a reason to question the validity of previous qualification tests, they are routinely accepted. Welders unable to make quality welds consistently can be required to be requalified in accordance with AWS D1.1, clause 4.2.3.1.

16.8 SPECIFICATION OF ENGINEER-INITIATED ALTERNATIVES

The content of this section is closely related to that of Section 16.5; this section focuses on alternate approaches to the work, versus different features of the constructed steel. Generally, means and methods are the responsibility of the contractor, and the engineer is specifically not responsible for these issues, as discussed in AISC *Code* Section 1.9. In a few situations, AWS D1.1 draws the engineer into the means and methods discussion, as will be discussed.

16.8.1 Assembly and Welding Sequence

When the engineer requires "…a specific assembly order, welding sequence, welding technique or other special precautions," the joints or groups of joints are to be identified in the contract documents as required by AWS D1.1, clause 2.3.3. The assembly and welding sequence may be important from a constructability perspective or for the control of residual stresses that may cause cracking, tearing or excessive distortion.

The contractor is assigned the same obligations and is to note these details on the shop drawings. Further, as stipulated in AWS D1.1, clause 5.20.3, "On members or structures where excessive shrinkage or distortion could be expected, the Contractor shall prepare a written welding sequence for that member or structure which meets the quality requirements specified. The welding sequence and distortion control program shall be submitted to the Engineer, for information and comment, before the start of welding on the member or structure in which shrinkage or distortion is likely to affect the adequacy of the member or structure." The written welding sequence is often called a distortion control plan.

The practical implementation problem associated with AWS D1.1, clause 5.20.3, is in identifying, before fabrication or erection, the "members or structures where excessive shrinkage or distortion could be expected." After welding, when excessive distortion is observable, it becomes self-evident that a plan should have been developed and used to control distortion. With the benefit of hindsight, it is easy to assign blame to the contractor, who should have known that a written sequence was needed.

16.8.2 Importance of Cooperative Interaction

Cooperative interaction between the engineer and contractor is encouraged with current AWS D1.1 requirements—if the engineer foresees the need for special sequencing, it is specified in the contract documents. If the contractor foresees the need for special sequencing, it is specified in the shop drawings; a plan is developed and submitted to the engineer for review and comment before welding. If the engineer expects a written sequence from the contractor, the lack of submittal can trigger the need for development of such a plan. Thus, if either the engineer or contractor anticipates the need for a distortion control plan, this is documented on drawings. The principles as contained in Chapter 7 of this Guide can be incorporated into the written plan.

A tendency to require a distortion control plan in all circumstances represents an ongoing abuse of best practices. Normal steel fabrication is successfully done every day without the need for such a plan. Welding on very thin sections, particularly with large and long welds, may call for distortion control to be considered. Very large, multiple-pass welds on thick steel may require special planning, particularly when one-sided welds are necessary. These are issues that contractors routinely face, but the engineer only needs to deal with them under unusual circumstances.

16.9 EVALUATION OF CONTRACTOR-INITIATED ALTERNATIVES

AWS D1.1 contains code-permitted alternatives that are permissible only when approved by the engineer. Normally, the contractor will bring these issues to the engineer for resolution. Approval or denial of these alternatives may significantly affect the contractor's cost and/or the construction schedule. The engineer must carefully consider the relative suitability of these various alternatives, and the following guidelines are offered to assist in that evaluation.

In most situations, the contractor makes the request to the engineer to approve an alternative. When the option is not granted, a default position exists, and the project can progress accordingly, utilizing the standard practice identified in the code.

When the engineer is called upon to approve a request made by the contractor, it typically fits into one of the following general categories:

1. New materials and processes not covered by the code
2. Alternate practices

16.9.1 New Materials and Processes

"Codes always lag industry." So said Omer W. Blodgett, author of *Design of Welded Structures* (Blodgett, 1966), in the hundreds of seminars he taught all over the world during his six-decade career as senior design consultant for The Lincoln Electric Company. New steels and construction processes are typically in practice before being recognized in codes and standards. The code development process, along with the publication intervals, may result in significant delays from product inception to code incorporation. AWS D1.1 permits the use of unlisted materials and processes with the approval of the engineer, allowing for innovation while codes catch up with developments. However, steels and processes that are not listed in codes and standards may be absent for a very good reason—the committee may have already considered and rejected the concept. Thus, the engineer must be cautious when reviewing such issues.

New and Unlisted Materials

Steels that are not contained in the prequalified base metal list in AWS D1.1, Table 3.1, nor the code-approved base metal list in AWS D1.1, Table 4.9, are allowed when approved by the engineer, as stipulated in AWS D1.1, clause 4.8.3. Unlisted base metals are discussed in Section 5.3 of this Guide.

Many questions should be asked when dealing with unlisted base metals. Fortunately, in most cases, a producing mill will be involved and should have the technical resources to answer these questions:

- Are there adequate controls on the mechanical properties of the steel? The properties of interest certainly include minimum yield and tensile strength and elongation but may also extend to maximum yield and tensile strengths and minimum fracture toughness levels.
- Are there adequate controls on the chemical composition of the steel? This should include minimum and maximum levels on carbon and alloys, maximum levels on sulfur and phosphorous, and limits on unlisted elements.
- Are there adequate controls on the physical dimensions of the steel? This is particularly important for nonplate product.

- How is the steel processed? Hot rolled? Quenched and tempered? Other? And, how would any heat treatment of the steel be affected by welding and cutting processes?
- Why is the steel not listed in AWS D1.1?
- Is weldability data available?
- What other projects have used this steel?
- What are the steel producer's recommendations regarding the welding of the steel? Minimum preheat temperature levels? Maximum preheat and interpass temperature limits? Filler metal requirements? Any restriction on thermal treatment of the steel? Heat shrinking temperature limits?

WPS will require qualification by test when unlisted steels are used, and such tests will provide useful data regarding the weldability of the steel. However, WPS qualification tests do not constitute true weldability tests and may not have sufficient restraint to detect cracking that could occur in actual applications.

Welding and Cutting Processes

AWS D1.1 lists welding processes that may be used for prequalified WPS, as well as welding processes that may be used for construction under the code. The code further extends the opportunity for the use of other welding and cutting processes when the engineer approves these other methods as stipulated in AWS D1.1, clauses 3.2.3, 4.14.2 and 5.14.8.1. Alternate processes could involve a variety of new or different controls that need to be monitored, and the evaluation of such variables is part of the alternate process approval activity. Alternative welding and cutting processes will likely have been developed by a manufacturer that may have data to support the use of the process on structural applications.

WPS are required to be qualified by test if an unlisted process is used. The testing required for a qualified procedure will provide some information about the alternative process. Again, WPS qualification tests do not constitute true weldability tests and may not have sufficient restraint to detect cracking that might occur in actual applications. When WPS are qualified, important welding variables applicable to the unlisted process that are not defined in the code may have to be considered as discussed in AWS D1.1, clause 4.14.2.

The integrity of surfaces cut with alternative processes must be evaluated. For example, thermal cutting processes will create a HAZ that requires evaluation.

Electroslag and Electrogas Welding

Electroslag (ESW) and electrogas welding (EGW) are discussed in Section 2.6 of this Guide. These processes differ from conventional arc welding processes in several ways that should be considered by the engineer: (1) the heat input levels are much higher; (2) the weld metal and HAZ CVN toughness may be lower; and (3) when steel dams (shoes) are used, notches may be introduced into the connection. Because ESW and EGW are not prequalified processes, all WPS are required to be qualified by test.

AWS D1.1 draws special attention to ESW and EGW in clause 2.3.3. After discussing the need for the engineer to indicate in the contract documents "…those joints or groups of joints…(which) require a specific assembly order, welding sequence, welding technique or other special precautions," the reader is directed to "See 5.4.1 and C-5.4.1 for limitations on the application of ESW and EGW welding." AWS D1.1, clause 5.4.1, lists steels suitable for use with ESW/EGW. The linkage of the normal issue of welding processes (a means and methods issue) to the engineer is unique but justified in the case of ESW/EGW for the aforementioned reasons. Because some welds are impossible to make with processes other than ESW/EGW, the unique features associated with these processes need to be understood.

Under normal conditions, once ESW/EGW is started, the process is allowed to continue, uninterrupted, from start to finish. If the process is interrupted, the stop/start location is to be identified and reported to the engineer as required by AWS D1.1, clause 5.4.4. Because ESW restarts and the subsequent repairs have been problematic in the past (Fisher, 1984), additional inspections in this region may be warranted beyond what might have been specified for the normal construction. Similarly, before any repairs to ESW/EGW welds are made to cracks or other internal defects, the engineer's prior approval is required as stipulated in AWS D1.1, clause 5.25.3.

16.9.2 Alternate Practices

Various alternatives to standard practices may be used when approved by the engineer. The following sections describe the alternatives and issues that should be considered.

Alternative Preheat Requirements

For structural steel welding, most work is done with prequalified WPS, which require the use of preheat in accordance with AWS D1.1, Table 3.3. Two alternatives to the use of Table 3.3 preheat levels are presented, both requiring the engineer's approval.

Preheat Alternative for SAW

For single-pass welds made with submerged arc welding, it is possible to use the heat input of welding to reduce the required preheat. Hardness measurements are used to confirm the heat input is adequate for the specific welding conditions. The engineer must approve the use of this approach as required in AWS D1.1, clause 3.5.2.

If all the requirements are met—the maximum hardness values are not exceeded and no cracking is observed—there should be little concern on the part of the engineer with respect to approving this approach. The results are obtained from the actual steel welded under the actual production constraints; the hardness readings provide more evidence of a successful combination than do the standard preheat limits that are based on more generalized assumptions of actual conditions.

After the procedure has been established, the hardness checks can be discontinued with the engineer's approval as stipulated in AWS D1.1, clause 3.5.2. Discontinuation of the hardness checks requires some judgement; as long as nothing changes, there is no reason to continue the checks. However, things do change—the steel thickness may change, the heat of steel may change, and the SAW flux and electrode may change. Accordingly, it may be advisable to require spot checks to account for minor changes. When major changes are required, reinstituting the whole testing regime is reasonable until a new history of satisfactory results is established.

Alternative Preheat for Qualified WPS

AWS D1.1, Annex H, contains an alternate preheat method that is based upon the chemical composition of the actual steel, the heat input of welding, the hydrogen content of the deposited weld metal, and other factors. When preheats are calculated in accordance with Annex H, the resultant values may be higher than or lower than those prescribed for prequalified WPS in AWS D1.1, Table 3.3. Calculated preheat values that are lower than Table 3.3 may be used, provided the WPS is qualified by test and the engineer approves the use of the lower preheat in accordance with AWS D1.1, clause 4.8.4.

The alternative preheat values established as previously discussed are supported by two additional sets of data: the calculated values based on the Annex H model and the results of WPS qualification testing. The calculated value is based on more specific criteria than are the Table 3.3 preheat values. The calculated value may be lower than what would normally be required by Table 3.3, but the acceptability of this value will be additionally supported by the WPS qualification testing. If the data are valid, approval of this alternate preheat should be straightforward. However, preheat serves many secondary functions beyond the mitigation of cracking; even though reduced preheat values may be acceptable based on elimination of cracking concerns, higher values may be required for other reasons, particularly for overcoming the challenges of restraint.

Approval of WPS Qualified to Other Standards

Qualification of WPS is a major expense for contractors, and the use of previously qualified WPS is always desirable to minimize unnecessary costs. Most structural work is done with prequalified WPS, avoiding qualification testing altogether. For qualified WPS, the typical approach used by structural steel contractors is to qualify the WPS per AWS D1.1 requirements. Some contractors may have WPS qualified in accordance with an alternative welding standard such as the American Society of Mechanical Engineers (ASME); this is often the case for contractors who primarily do nonstructural work, but may be involved with a project governed by AWS D1.1. When this is the case, WPS qualified to other standards may be used with the engineer's approval as stipulated in AWS D1.1, clause 4.2.1.2.

Most welding codes seek to obtain the same type of information regarding weld soundness and mechanical properties. If the required tests and requirements are substantially the same as what is required by AWS D1.1, acceptance of the WPS for use on identical applications as were tested is a straight-forward decision. A more difficult decision involves the use of WPS that deviate from the test conditions. The role of WPS and PQR is discussed in Section 8.5 of this Guide.

A key issue to consider when evaluating WPS qualified to other standards involves the limitation of variables or the allowable deviation permitted from the qualified conditions. The limitation of variables used for WPS qualified to other standards needs to be compared to AWS D1.1 criteria. For example, AWS D1.1 considers welding position and groove weld joint details as essential variables while other codes do not.

As guidance for the engineer who must determine if WPS qualified to other standards are acceptable, the following suggestions are offered. If the qualification test to other standards required acceptance criteria similar or identical to those required by AWS D1.1, that test can be used as a basis for WPS used on an AWS D1.1 project. However, WPS based upon that test should comply with AWS D1.1 limitations of variables. WPS that would not comply with these limitations of variables should be carefully considered (and likely rejected).

AWS D1.1 is unique in permitting prequalified WPS. Contractors doing work to other codes do not usually have the latitude to use prequalified WPS. The WPS qualified in accordance with other standards may meet all the prequalified requirements of AWS D1.1. When this is the case, the WPS can be accepted because it complies with the AWS D1.1 prequalified requirements and has the additional support of the qualification test.

Caulking

Caulking is defined in AWS D1.1, clause 5.27, as the "…plastic deformation of weld and base metal surfaces by mechanical means to seal or obscure discontinuities." Historically, caulking has been totally prohibited because it can be used to mask weld discontinuities. However, caulking is currently permitted under certain conditions when it is needed

to prevent failure of various surface coatings. Permission to caulk for coating purposes is extended to steels with a specified minimum yield strength of 50 ksi (345 MPa) and less; weld inspection must be completed prior to the caulking treatment, and the engineer must approve of the technique and limitations in accordance with AWS D1.1, clause 5.27.

This is a very specialized situation, and the engineer involved with such a situation will no doubt have specified the coating system or have been involved with the selection thereof. The coating supplier will likely have information as to what approaches to surface caulking are required.

For steels with a specified minimum yield strength greater than 50 ksi (345 MPa), caulking is universally prohibited due to concerns about cold working of the higher strength steel.

Die Stamping

Inspectors are required to identify parts that have been inspected and accepted, but the method of identification is not specified. However, die stamping cannot be used on cyclically loaded members unless approved by the engineer as stipulated in AWS D1.1, clause 6.5.4. The concern with die stamping is associated with the sharp edges that may serve as crack initiation points on cyclically loaded parts. Markings with ink stamps, paint sticks and the like avoid this issue; low stress stamping dies are also available.

Post-Weld Heat Treatment

Most welded structural steel is used in the as-welded condition, that is, without any post-weld heat treatment (PWHT), which is defined as "any heat treatment after welding" in AWS D1.1, Annex J. PWHT may affect the mechanical properties of the weld, the HAZ or the base metal. Stress relief operations may cause stress relief cracking in certain steels (see Section 6.7 of this Guide).

While rarely used for structural steel applications, the most common reason for PWHT is for stress relief, in which case the more specific term *thermal stress relief* is more commonly used than PWHT. Stress relief normally involves heating the steel to 1,150°F (620°C) and holding it there for at least 1 hr/in. (25 mm) of steel thickness. Thermal stress relief may be specified to reduce residual stresses that are causing ongoing fabrication-related cracking problems. More frequently, thermal stress relief is used to achieve dimensional stability in post-welding machining operations. Few structures are machined after welding, but components on moving bridges like gear racks may need to be stress relieved in order to preclude movement of the part during machining. AWS D1.1 permits the use of prequalified WPS in the stress relieved condition under prescribed conditions, which include the approval of the engineer as stipulated in AWS D1.1, clause 3.14.

In some situations, the need for stress relief may be anticipated before a project begins. More commonly, a contractor may request permission to stress relieve a product after problems are encountered during construction—cracking that cannot be resolved using standard means or the part moves excessively during machining. Sometimes, stress relief is mistakenly specified to solve distortion problems; after a weld is completed, stress relief may reduce distortion incrementally, but it will not eliminate the majority of the distortion. Regardless of the reason for desiring stress relief or other forms of PWHT, the engineer is required to approve the process if prequalified WPS are used. If the WPS is qualified by test, the test plate is required to be stress relieved and will provide some data on the suitability of the PWHT.

The effect of any PWHT on the base metal, weld metal and HAZ must be considered. The steel producer can be contacted for information on the steel and the filler metal supplier for information on the weld deposit. Some filler metals are classified in the as-welded condition, others in the PWHT condition, and sometimes, the same filler metal will be classified both ways (see Table 2.2 of this Guide). The standard PWHT time for classification tests is 1 hour; longer stress relief times may result in properties that are not represented by the 1-hour test. The AWS D1.1, clause 3.14 Commentary provides helpful information.

While permitted by AWS D1.1, the engineer should be cautious when approving the use of prequalified WPS for PWHT applications. A qualification test replicating the conditions that will be encountered in production should be requested when insufficient data are available to support the use of the prequalified WPS.

Discontinuous Backing

Backing is normally required to be continuous along the length of a joint. Specific exceptions as applied to HSS are provided in AWS D1.1, clauses 5.9 and 9.23. Other exceptions to the requirement for continuous backing are permitted, with the engineer's approval as required by AWS D1.1, clause 9.23. The concern with discontinuous backing is with the unfused interface between segments of backing and whether the resultant planar discontinuity will constitute a problematic stress raiser. The primary issue to consider is whether service loads will create a stress field that will act perpendicular to the planar discontinuity. For longitudinal backing, interruptions in the length of the backing will likely create stress fields that are perpendicular to the stress field and are accordingly prohibited by AWS D1.1, clause 5.9.1.2.

The HSS exception to the normal requirement of continuous backing is possible because the interface between segments of backing creates planar discontinuities that are likely parallel to the primary stress. For box-column splices, backing is allowed to be interrupted at the corner; again, the

unfused interface is likely to be parallel to the direction of primary stress.

For other applications where using continuous backing is difficult or impossible, and where backing removal is not a viable option, the engineer can approve the use of discontinuous backing. The key consideration is the orientation of the unfused interface and the principal stresses at that location.

16.10 HANDLING UNEXPECTED CONSTRUCTION DIFFICULTIES

A variety of problems may be encountered in the fabrication and erection process. AWS D1.1 contains criteria as to what is and is not acceptable, what can be repaired as part of normal construction, and what repairs require the engineer's approval. In some cases, AWS D1.1 does not provide a pathway for resolution of a problem other than replacing the fabricated part. In such situations, the engineer may be called upon to assist in the resolution of the problem, even when the code does not explicitly point to the engineer's approval authority; the engineer is always able to use alternate acceptance criteria as stipulated in AWS D1.1, clauses 6.5.3 and 6.8).

Chapter 15 of this Guide deals with common construction problems, discussing the problems and potential fixes. Those principles should be considered when unexpected construction difficulties are encountered.

16.11 DEVELOPMENT OF SPECIFICATIONS FOR WORK ON EXISTING STRUCTURES

When the topic is strengthening and repairing an existing structure, the number of situations that conceivably could be encountered is practically endless. Thus, it is impossible for any code to provide specific requirements applicable to every situation that could arise. AWS D1.1, clause 8, is devoted to the subject of welding on existing structures, and requires the engineer to prepare "a comprehensive plan for the work," with plans that include, "but are not limited to, design, workmanship, inspection, and documentation."

Section 14.9 of this Guide deals with the topic of welding on existing structures and provides principles to be considered when unexpected construction difficulties are encountered.

"Slab columns" made from three pieces of 6-in.-thick steel (photo courtesy of The Lincoln Electric Company).

Chapter 17
Economy in Welding

17.1 INTRODUCTION

When performed properly, welding is an economical tool for joining steel. Conversely, welding can be unnecessarily expensive when improperly applied. Economy in welding is achieved when good, efficient designs are fabricated and erected using good, efficient welding procedures. Economical designs utilize grades of steel that are easy to fabricate and employ joint details and weld types that efficiently transfer the applied loads. The welded joints utilize optimized details, with consideration given to the location and position in which welding will be performed. Welding procedures that lead to economical fabrication use the best welding process for the application and deposit weld metal at a rapid pace, consistent with quality requirements and adherence to safe work practices. Welding economy is dependent on doing the job right the first time; repairs cause costs to escalate exponentially.

Optimizing all of these factors and others that have not been specifically listed is a challenge. The basic principles that should be considered are summarized in the following sections. This Guide is primarily directed to the engineer, and the items covered are primarily design related. Detailers will find the information helpful as well. Many resources are available to assist contractors in their quest for more economical welding procedures. Technological developments in both welding consumables and machinery make yesterday's best practices obsolete, requiring the progressive contractor to continually examine new opportunities.

The single largest component of cost in welding is that of the skilled labor and associated overhead required to make a weld. In general terms, labor will account for 75% to 95% of the cost of a weld made manually or semiautomatically. Energy costs, filler metals and shielding materials make up the remaining 5% to 25%. For a given weld size, economical welding is typically achieved when welding procedures are used that deposit the required metal in the least amount of time; quality and safety must never be compromised for the sake of productivity. It is not unusual, however, for quality welds to be made in a safe manner with procedures that are twice as productive as another otherwise acceptable alternative. In general terms, a welding procedure that deposits the required metal at a rate that is twice as fast will reduce the welding cost by approximately 50%.

Most of the principles in this chapter are presented in terms of reduced weld metal volumes, assuming that as the required amount of welding goes down, so will the required time to make the weld. Two caveats must be offered: First, presenting these concepts in such terms runs the risk of implying that the major cost of welding is filler metal when labor and overheat rates are invariably the largest single cost factor in welding, particularly in North America. Second, there are specialized situations wherein a weld joint requiring a larger volume of weld metal can be completed more rapidly than one requiring less metal because it may be possible to deposit the metal at a faster rate in a joint requiring more metal.

The lowest cost weld will always be the one that is made only once. The cost of a weld repair is estimated to be six to eight times greater than the initial welding cost. If a particular weld design or welding procedure is marginal in its ability to consistently achieve the required quality criteria, necessitating ongoing weld repairs, economy can surely be achieved by adopting practices to eliminate the rework.

While the principles outlined in this chapter are generally true, there are no doubt exceptions to every example. The conditions associated with a specific project may require considering factors beyond those presented here in order to generate the most economical solution.

17.2 SELECTION OF PROPER WELD TYPE

17.2.1 CJP Groove Welds versus Alternatives

Complete-joint-penetration (CJP) groove welds are typically the most expensive type of weld, and in general, should be reserved for situations in which they are the only viable option. In butt joints where the full tensile capacity of the surrounding steel must be developed, CJP groove welds are the only option. It is possible to replace the direct butt joint with lapped plates joined with fillet welds, but the alternative configuration is generally much more expensive.

One of the costs associated with CJP groove welds is the subsequent NDT that may be required. Not all CJP require nondestructive testing (NDT) as stipulated in AISC *Specification* Chapter N, although this is a common misconception. Chapter N does not, for example, mandate NDT for CJP groove welds loaded in shear or compression. When NDT is required, however, the inspection task itself increases costs, and any detected defects require repair welding.

In corner joints, the capacity of a CJP groove weld is seldom required because the welds in these joints are normally subject to shear. If the capacity of a CJP is needed, and if access to both sides of the joint is possible, partial-joint-penetration (PJP) groove welds with fillet welds on the opposite side are typically more economical.

For fabricated box columns, CJP groove welds may be required in the portion of the column where the beams will be joined but not for the rest of the length of the column. In these cases, CJP groove welds can be used in the critical portions but less expensive PJP groove welds used for the rest of the column.

Like corner joints, T-joints loaded in shear, such as web-to-flange welds in plate girders, are rarely loaded to a level that would necessitate the use of CJP groove welds. If such capacity is required, however, properly sized PJP or fillet welds, or combinations of the two, are usually more economical than the use of CJP groove welds. It should be noted that in some cases, CJP groove welds may be required, not for strength reasons, but because alternative welds may introduce internal stress raisers that may be problematic under some loading conditions. For example, girders that function as crane rail supports are typically specified to have CJP groove welds between the web and the top flange that supports the crane rail; in this case, the CJP is not required for strength reasons, but the unfused interface between the roots of either fillet or PJP groove welds can serve as a crack initiation site due to the high compressive loads that are cyclically applied. Leaving aside the specialized situation of crane girders, most corner and T-joints loaded in shear rarely justify CJP groove welds; fillet welds or PJP groove welds are a more cost efficient option.

The position of welding must be considered when weld types are selected. Consider a beam flange-to-column flange joint in a field welded moment connection, as shown in Figure 17-1. Double-sided CJP groove weld details are impractical in this situation because overhead welding would be required.

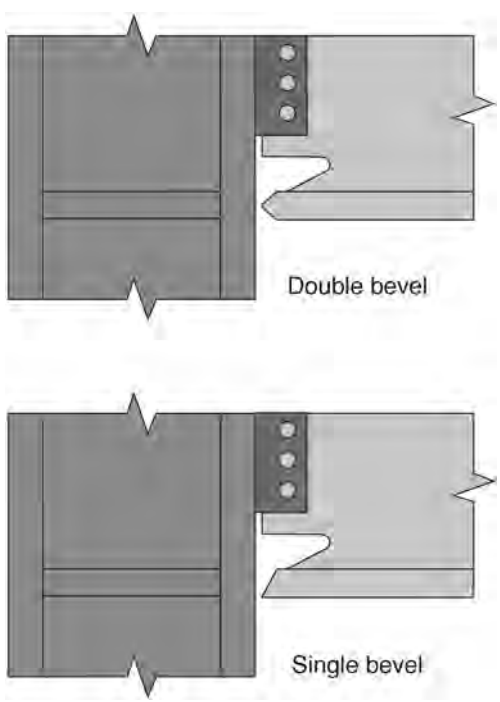

Fig. 17-1. Beam-to-column connection.

A major deviation to the principles regarding CJP groove welds occurs when electroslag or electrogas welding is used, either by preference or necessity. These processes are ideally suited for CJP groove welds, and in order to optimally use the processes, a CJP groove weld may become the best option. A common situation where this is the case is when internal diaphragms are fitted inside box sections.

17.2.2 Fillet Welds versus PJP Groove Welds

Fillet welds and PJP groove welds can both be used in T-joints and corner joints, and thus, it is important to know which option is more economical. For welds with equal throat dimensions, a PJP groove weld in a 90° T-joint requires one-half the volume of weld metal as compared to a fillet weld of similar strength—see Figure 17-2. This assumes that the PJP groove uses a 45° included angle and that the effective throat, E, is equal to the depth of groove preparation, S, which will not always be the case. However, with these assumptions in place, a 2:1 ratio in the volume of weld metal for the same strength exists, with the PJP groove weld being more efficient.

PJP groove welds require that a bevel be applied to create the groove, adding to the overall cost. One method of estimating time for beveling is to assume that it will take the same amount of time as making a single-weld pass. This would suggest that single-pass fillet welds are always more economical than PJP groove welds.

Another method for deciding between fillets and PJP groove welds uses this rule-of-thumb: Use fillet welds whenever the required weld leg size is 1 in. (25 mm) or less, and use PJP groove welds instead when larger fillet welds would be required. Most fillet welds for structural steel applications are not required to have leg sizes greater than 1 in. (25 mm), and therefore, fillet welds are typically the most economical choice.

Welding position and material handling must also be considered. Both details shown in Figure 17-2 are oriented for horizontal position welding. While fillet welds are easily made in either the flat or horizontal position, PJP groove welds are ideally made in the flat position, although horizontal position welding is possible. If the T-joints shown were double sided, and if the PJP groove welds were made in the flat position, then more material handling would be required to make the PJP groove welds as compared to horizontal position fillet welding. Extra material handling adds costs and may provide sufficient incentive to encourage the use of fillet welds instead.

An exception to this trend exists when the T-joints are skewed, as shown in Figure 17-3. On the obtuse side, the

throat of the fillet weld becomes disproportionately small as the angle increases, whereas the PJP option does not suffer from this trend. The naturally occurring gap is another factor that must be considered; the effect with the fillet weld is greater than with the PJP. Many factors are involved in determining the best detail for this situation, which is best examined on a case-by-case basis.

17.2.3 Combination PJP Groove Weld/Fillet Weld Option

When the required weld size justifies a PJP groove weld rather than a fillet weld (see Section 17.2.2 of this Guide), a PJP groove weld/fillet weld combination as shown in Figure 17-4 may be the most economical option.

When a 45° included angle is used for the PJP portion of the weld, and when the fillet weld leg size is equal to the depth of groove weld preparation, *S*, then a combination PJP/fillet weld requires no more weld metal than does a properly sized PJP alone. As demonstrated in Section 17.2.2, this will be half as much as would be required for a fillet weld of equal strength.

The combination offers some additional advantages. First, in a T-joint it is hard to make an absolutely flat-faced PJP groove weld, and it is natural to find that a fillet weld of some sort is often applied, even though not specified—see Figure 17-5. When made in the horizontal position, the extra weld applied in this manner is often extensive. Second, and particularly for cyclically loaded structures, it may be required to have a fillet weld on top of the PJP groove weld to provide for a better contour at the intersection.

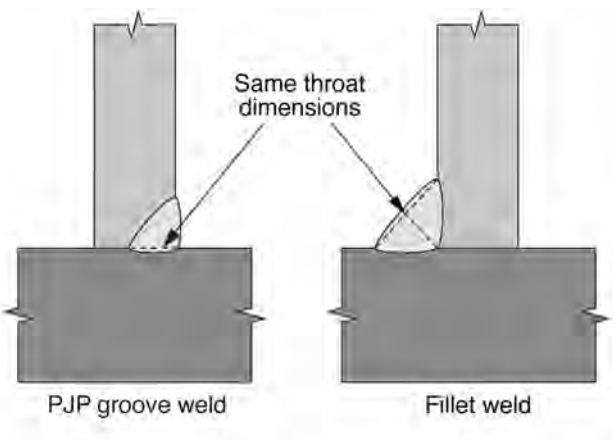

Fig. 17-2. Fillet and PJP groove weld throats.

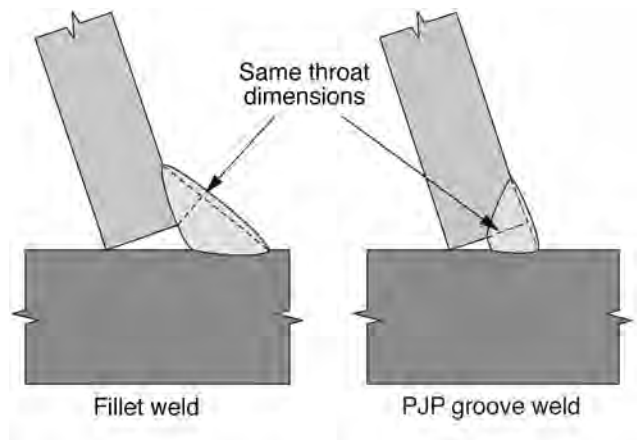

Fig. 17-3. Throats in skewed T-joints.

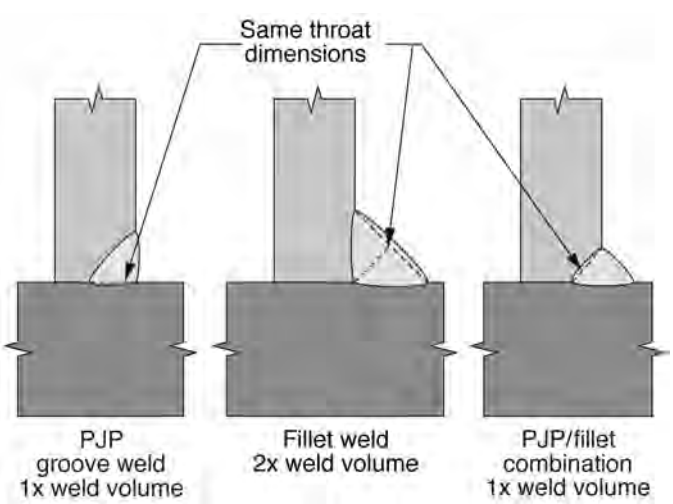

Fig. 17-4. T-joint fillet weld and PJP groove weld options.

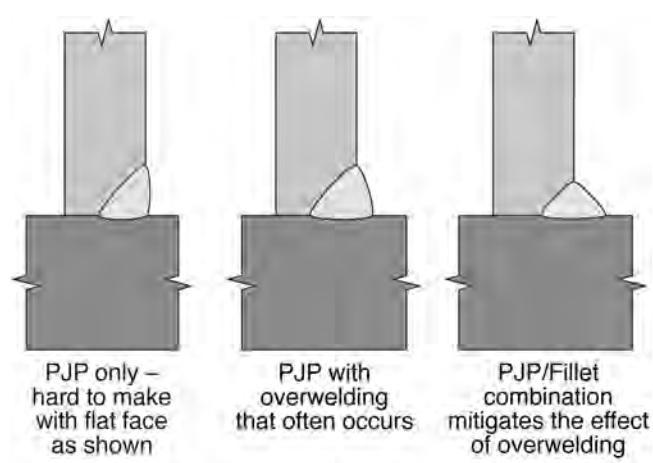

Fig. 17-5. Effect of horizontal position welding.

When PJP groove welds offer advantages over fillet welds, then the PJP groove weld/fillet weld combination should be considered as well, and the combination is typically preferred over the PJP groove weld-only option, particularly when welding is performed in anything other than the flat position.

17.3 PROPER DETAILING OF WELDS

Welds of the same type and strength can be optimized to minimize costs. This responsibility typically rests with the detailer who must balance several variables to achieve the required weld strength in an economical manner.

17.3.1 Fillet Welds: Leg Size versus Length

For a filler metal, the strength of a fillet weld depends on the weld throat, which is proportional to the leg, and the weld length. The fillet weld leg size should be no less than the minimum prequalified size (see Section 3.5.1 of this Guide) and no larger than any applicable maximum size (see Section 3.5.2 of this Guide). The length cannot be longer than the joint. Within these limits, however, there are theoretically endless combinations of weld sizes and lengths that can all be used to achieve a connection of the required strength.

The strength of a fillet weld increases linearly with the length—double the length and double the strength. When this is done, the weld volume doubles as well. Alternately, to double the strength of a weld, the weld leg size can be doubled while maintaining the same length. However, when the weld leg size is doubled, the volume of weld metal quadruples. For economy, fillet welds should be detailed to be longer rather than larger when more strength is needed. For end-loaded connections, the maximum fillet weld length provisions should be considered (see Section 3.5.4 of this Guide).

After the required strength of the weld has been determined, the required weld length should be calculated using the minimum prequalified fillet weld size for the thicknesses of materials involved. If the calculated length is much less than the joint length, using intermittent fillet welds is an option. If the required weld length is greater than the joint length, then the fillet weld leg size must be increased.

A simple and practical way of doubling the weld length is to make double-sided fillet welds on T-joints, for example. Where access permits, and where justified due to the loads transferred across the joint, the double-sided alternative requires half the volume of weld metal as would be required for a single-sided fillet weld of equivalent strength. Additionally, the weld root is protected against tearing and distortion control is typically better.

17.3.2 Fillet Welds: Intermittent versus Continuous

For lightly loaded connections, intermittent fillet welds may be a logical and economical choice. For cyclically loaded structures, the fatigue implications must also be considered. Economical intermittent fillet welds are never larger than the minimum prequalified size, nor are they ever multi-pass welds. If the intermittent welds are required to be larger than the minimum size, then economy can be achieved by specifying fillet welds of the minimum size with a longer length, even if the extra length requires that the weld be continuous for the length of the joint.

Production considerations may result in a contractor's preference for continuous versus intermittent welds, even though intermittent welds may satisfy design requirements. Initiating and terminating a weld are always complicated operations, and elimination of these starting and stopping conditions may outweigh the savings achieved by intermittent welding. Automated and robotic welding systems are typical situations in which such preferences are seen. Unless there are offsetting factors, such as the need to carefully control distortion, the use of continuous fillet welds in lieu of intermittent fillet welds is generally acceptable.

17.3.3 CJP Groove Welds: Single versus Double Sided

When access to both sides of a joint is possible, a single- or double-sided CJP groove weld can be used. For years, diagrams like the one shown in Figure 17-6 have been used to suggest a 2:1 savings in weld metal is possible when moving from a single-sided to a double-sided joint; for this specific geometry, this 2:1 relationship is correct. However, neither of the CJP groove weld details shown in Figure 17-6 represent the prequalified joint details that are typically used for structural steel fabrication.

As shown in Figure 17-7, a prequalified single-sided CJP groove weld detail will contain steel backing, as well as a root opening dimension. The included angle for the single

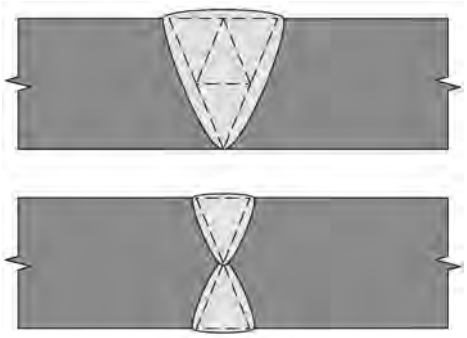

Fig. 17-6. Single- versus double-sided CJP groove welds—an idealized comparison.

V-groove detail is usually smaller than that for the double V-groove alternative because the single-sided option utilizes a wider root opening that provides for better access to the root of the joint.

Figure 17-8 illustrates details of a prequalified double-sided V-groove detail; the included angle is larger than the idealized example, as would be typical of an actual joint. A root face dimension has been shown, as would normally be used in an actual double-sided detail. The cross-hatched area represents the metal removed by backgouging that must be restored by welding.

The effect of the thickness of the materials being joined must also be considered. For thicker materials, the smaller included angle associated with the single-sided detail makes it a more economical detail as can be seen in Figures 17-9 and 17-10.

Both the single-sided and double-sided CJP groove weld details have production advantages and limitations. The double-sided detail requires more edge preparation. The single-sided option requires backing, but not the back-gouging required of the alternative. All welding is done from one side on the single-sided joint, eliminating the possible need for part movement, such as flipping parts, in order to obtain the generally more favorable flat position for welding. For parts that cannot be rotated, single-sided welds may eliminate the need for out-of-position (overhead) welding. The steel backing associated with the single-sided detail more readily accommodates fit-up variation as shown in Figure 17-11.

The decision to use a single-sided versus double-sided detail is not as simple as is implied with the example shown in Figure 17-6 because the 2:1 ratio does not hold true for most prequalified details, as shown in Table 17-1.

In these examples, the 2:1 ratio was never achieved as reflected in the right column, and for heavier thicknesses, the differences become inconsequential. In general, issues

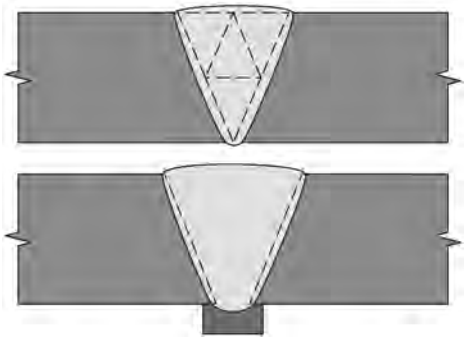

Fig. 17-7. Single-sided V-groove welds—idealized versus prequalified.

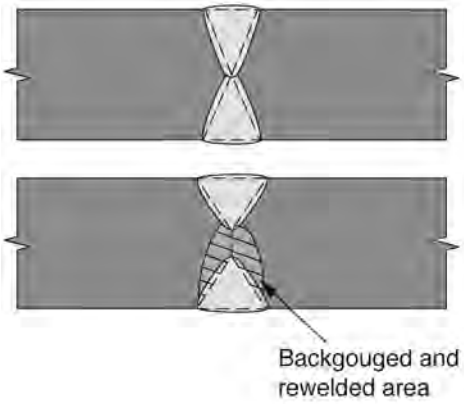

Fig. 17-8. Double-sided V-groove welds—idealized versus prequalified.

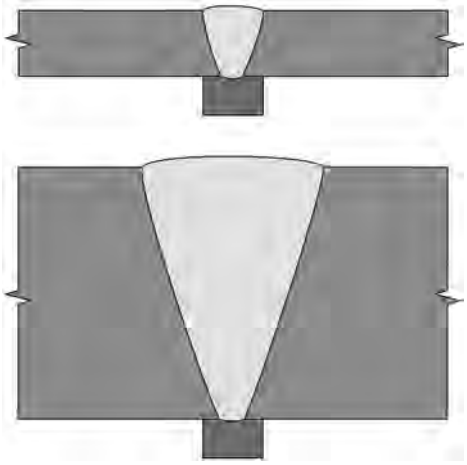

Fig. 17-9. Effect of thickness on single-sided V-groove welds.

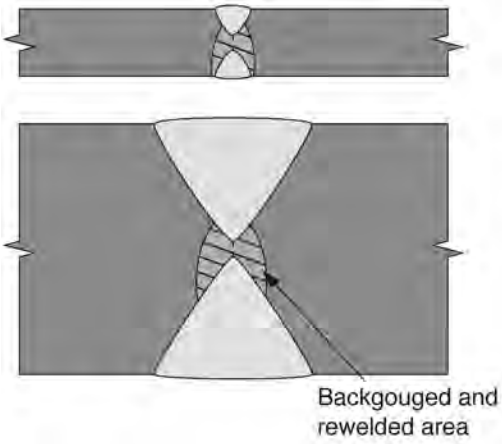

Fig. 17-10. Effect of thickness on double-sided V-groove welds.

Table 17-1. Weld Metal Weight per Length: Single- versus Double-Sided Groove Welds			
Thickness (weld throat), in.	**Single V-Groove Weld 30° Included Angle ⅜-in. Root Opening (B-U2a), lb/ft**	**Double V-Groove Weld 60° Included Angle 0-in. Root Opening ⅛-in. Face Dimension (B-U3b), lb/ft**	**Ratio Single Sided:Double Sided**
0.5	0.99	0.68	1.47
1	2.40	1.34	1.79
2	6.61	4.17	1.58
4	20.6	15.9	1.30
6	42.1	35.7	1.18
Thickness (weld throat), mm	**Single V-Groove Weld 30° Included Angle 10 mm Root Opening (B-U2a), kg/m**	**Double V-Groove Weld 60° Included Angle 0 mm Root Opening 3 mm Face Dimension (B-U3b), kg/m**	**Ratio Single Sided:Double Sided**
13	1.48	0.91	1.63
25	3.46	1.81	1.92
50	9.88	6.03	1.63
100	30.4	23.0	1.32
150	61.8	51.6	1.20

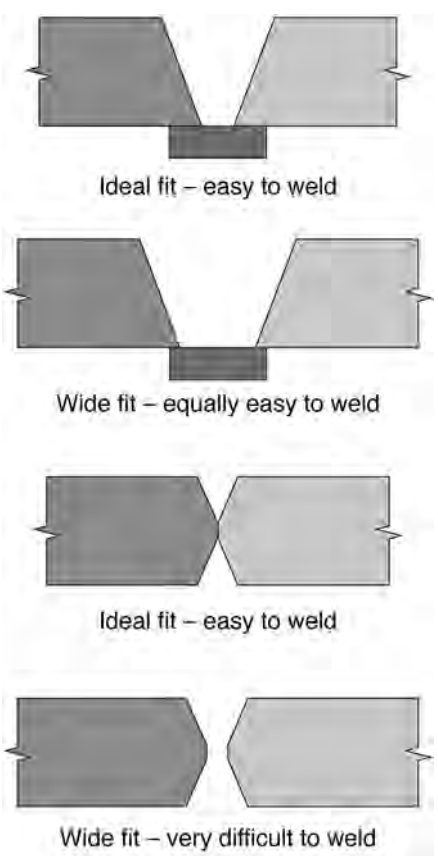

Fig. 17-11. Effect of thickness on double-sided V-groove welds.

other than simply weld volume should be used to determine whether single- or double-sided CJP groove welds should be used. Single-sided welds are usually easier to prepare and make, making them preferable to double-sided welds when distortion control is not a concern.

17.3.4 Single-Sided CJP Groove Weld Details: Included Angle versus Root Opening

For single-sided V-groove and bevel groove weld details, a combination of the root opening and the included angle ensure the weld root is accessible and that the root pass will have the proper width-to-depth ratio required to avoid some forms of cracking (see Section 6.3.1 of this Guide). Acceptable relationships have been incorporated into the prequalified groove weld details contained in AWS D1.1. Selecting one combination of details over another is typically driven solely by the relative economy. Table 17-2 illustrates the possibilities.

All details result in welds of equal strength and are equally easy to make, and thus economy is a logical criterion on which to base the selection. The figures in bold represent details that require the least amount of weld metal. For thinner materials ≤¾ in. (19 mm) thick, the details with the smaller root opening and larger included angle are more economical, whereas for material ≥1⅜ in. (35 mm) thick, the opposite is true.

For heavier material, the consequences of improper detail selection are more pronounced, both on a percentage basis

Table 17-2. Weld Metal Weight per Length: Effect of Root Opening and Included Angle						
Thickness (Weld Throat), in.	Single V-Groove Weld (B-U2a), lb/ft					
	Included Angle	Root Opening	Included Angle	Root Opening	Included Angle	Root Opening
	45°	¼ in.	30°	⅜ in.	20°	½ in.
⅜	**0.62**		0.71		0.84	
½	**0.90**		0.99		1.13	
⅝	**1.23**		1.29		1.44	
¾	**1.61**		1.62		1.76	
⅞	2.03		**1.99**		2.11	
1	2.50		**2.38**		2.47	
1⅛	3.01		**2.80**		2.86	
1¼	3.56		**3.24**		3.26	
1⅜	4.16		3.72		**3.68**	
1½	4.81		4.23		**4.12**	
2	7.85		6.54		**6.07**	
3	16.1		12.6		**10.88**	
4	27.2		20.4		**16.91**	
Thickness (Weld Throat), mm	Single V-Groove Weld (B-U2a), kg/m					
	Included Angle	Root Opening	Included Angle	Root Opening	Included Angle	Root Opening
	45°	6 mm	30°	10 mm	20°	13 mm
10	**1.00**		1.12		1.30	
13	**1.26**		1.38		1.57	
16	**1.87**		1.93		2.13	
19	**2.21**		2.24		2.43	
22	2.98		**2.90**		3.06	
25	3.41		**3.26**		3.39	
28	4.34		**4.02**		4.09	
31	4.84		**4.43**		4.46	
35	5.93		5.30		**5.23**	
38	6.51		5.76		**5.63**	
50	11.4		9.47		**8.75**	
75	23.1		17.9		**15.4**	
100	39.0		29.1		**24.0**	

and in terms of actual weld volumes involved. Consider 4-in. (100 mm) material using the 20° included angle, ½-in. (13 mm) root opening detail versus the 45° included angle, the ¼-in. (6 mm) root opening alternative results in a savings of nearly 60%.

Ideally, the various options should be compared when welds are detailed and the most economical detail selected. However, a rule-of-thumb has developed which is easy to remember and implement, and requires only slight compromise: for CJP groove welds with a throat dimension less than 1 in. (25 mm), use the smaller permitted root opening with the larger included angle, and for throat dimensions of 1 in. (25 mm) or more, use the larger root opening and smaller included angle.

17.3.5 CJP Groove Welds: V and Bevel versus U and J

Various groove weld preparations are illustrated in Figure 17-12. The V- and bevel groove details have planar surfaces that can be easily cut with oxy-fuel or plasma cutting methods. U- and J-groove details have curved surfaces requiring more complicated methods for preparation. However, once the preparation is complete, the required weld volume is reduced and cost savings are possible. Many structural steel shops do not have the machining capability to prepare U- and J-groove details, and thus V- and bevel groove options are used. Table 17-3 compares three viable options for heavier plate.

The U-groove detail requires the least amount of weld metal for thicker plates. A comparison of the spacer bar detail to the V- and U-groove alternatives shows that for material greater than 3 in. (75 mm), the spacer bar option is a practical and economical choice. Typical applications may include chord splices of trusses that use very heavy-rolled sections for the chord members. The joint preparation for the spacer bar detail does not require any specialized equipment but rather can be thermally cut just like a single or double V-groove detail. When the spacer bar detail is used, backgouging efforts are slightly more complicated and more material must be removed and restored by welding than is typical for double-sided V- and U-groove details.

17.3.6 PJP Groove Welds: Single versus Double Sided

Double-sided PJP groove welds require half the weld volume as compared to the single-sided alternative, with the only additional cost being the preparation of the opposite-side bevel. Using the rule-of-thumb that the bevel time and cost is about the same as that required to make a single-weld pass, single-sided PJP groove welds requiring three weld passes or more are probably more economical than two-sided alternatives.

Ideally, groove welds are made in the flat position, and double-sided PJP groove welds necessitate repositioning the material in order to take advantage of flat position welding. In contrast, single-sided PJP groove welds can be made without this extra material handling activity.

Additionally, double-sided PJP groove welds better protect the unfused root region from tearing. Single-sided details must be restrained to prevent rotation about the weld root.

17.3.7 Flare Groove Welds

Flare V- and flare-bevel groove welds, when filled flush, have throat dimensions that are defined in AISC *Specification* Table 2.2. The throat dimension depends on the welding process and is a function of the radius on the curved member(s). It is often assumed that filling these joints flush is required, but less than flush-filled joints are permitted, provided that the required throat is still obtained. This cost-saving idea is simple—specify only the required throat dimension rather than assuming that the flush condition is required. As the thickness of the curved member increases, so does the radius

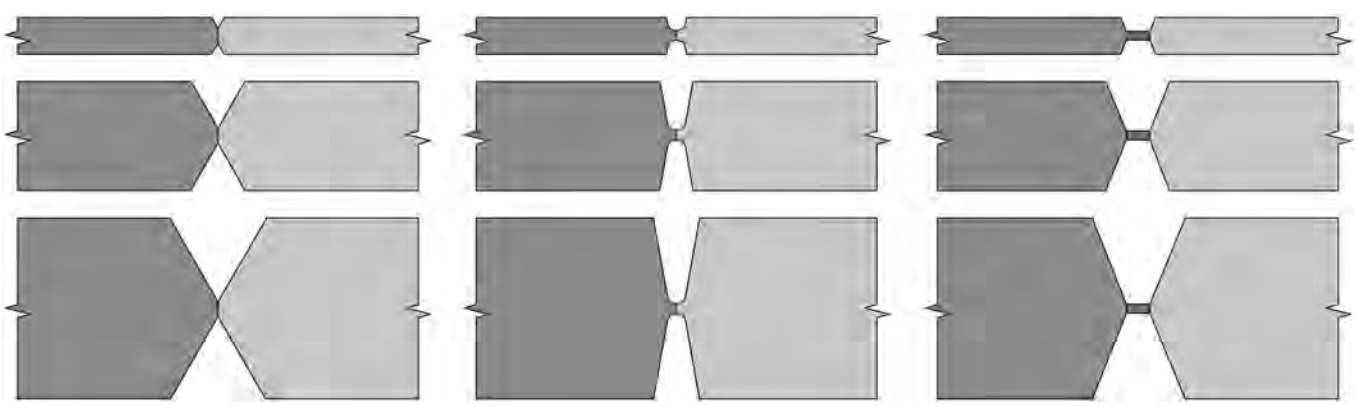

Fig. 17-12. Groove weld preparations and thickness.

Table 17-3. Weld Metal Weight per Length: Effect of Double-Sided CJP Joint Details						
Thickness (Weld Throat), in.	Double-Sided CJP Groove Weld Options, lb/ft					
	V-Groove (B-U3c-S)		U-Groove (B-U7-S)		V-Groove with Spacer Bar (B-U3a)	
	$\alpha = \beta = 60°$	$f = ¼$ in.	$\alpha = \beta = 20°$	$f = ¼$ in.	$\alpha = \beta = 20°$	$f = ¼$ in.
	$R = 0$ in.	—	$R = 0$ in.	Bevel Radius $r = ¼$ in.	$R = ⅝$ in.	Spacer Bar = ¼ × ⅝ in.
2	4.52		3.84		5.60	
2½	7.31		5.29		7.33	
3	10.8		6.89		9.21	
3½	14.9		8.64		11.3	
4	19.6		10.6		13.5	
4½	25.0		12.6		15.8	
5	31.1		14.9		18.3	
Thickness (Weld Throat), mm	Double-Sided CJP Groove Weld Options, kg/m					
	V-Groove (B-U3c-S)		U-Groove (B-U7-S)		V-Groove with Spacer Bar (B-U3a)	
	$\alpha = \beta = 60°$	$f = 6$ mm	$\alpha = \beta = 20°$	$f = 6$ mm	$\alpha = \beta = 20°$	$f = 6$ mm
	$R = 0$ mm	—	$R = 0$ mm	Bevel Radius $r = 6$ mm	$R = 16$ mm	Spacer Bar = 6 × 16 mm
50	6.60		5.42		8.25	
63	9.75		7.03		10.2	
75	15.6		9.70		13.5	
88	20.3		11.7		15.9	
100	28.4		14.9		19.7	
113	34.6		17.2		22.4	
125	44.9		21.0		26.8	

and weld throat that is achieved for heavier members. As a result, the potential savings can be significant when thicker members are involved (see Section 3.4.5 of this Guide).

17.3.8 Shop versus Field Welding

Field welding is discussed in Section 14.8 of this Guide. It is unlikely that there are any operations (drilling, bolting, sandblasting, painting, etc.) that are more economically done in the field versus in the shop, and welding is no different (see Section 14.8 of this Guide). Therefore, to the greatest extent possible, welding should be performed in the shop rather than in the field. Large or complicated connections should be welded in the shop, leaving the simpler connections for field welding. In some situations, this may even justify the creation of an additional splice, as is done with tree-column connections; at the node, complicated connections are made in the shop, and at the ends of the tree branches, simpler splices are made in the field.

Regardless of where welding is performed, it must be done in a safe manner, and the resulting weld must meet the quality requirements. Field conditions are more demanding, but both safety and quality can be achieved in the field when the site is properly supervised and managed. Finally, while shop welding is generally less costly than field welding, it does not logically follow that field welding is prohibitively expensive. Compared to other field joining methods, welding may prove to be the more economical alternative.

17.3.9 Welded versus Bolted Connections

An often-repeated saying, but one without either economic or technical justification, goes like this: "Weld in the shop, bolt in the field." The relative economics should be carefully examined before mere "sayings" are used to dictate practices.

As a general rule, the heavier the connection, the greater the economic advantage associated with welding, as the following comparison illustrates. Consider a tensile splice of a W14×730 rolled shape. While it is an extreme example, it illustrates the point that welding is often more desirable than bolting.

The bolted connection requires using 128 high-strength bolts, connecting the 5-in. (125 mm) flanges with a 4-in. (100 mm) plate on the outside and 3-in. (75 mm) plate on the inside, detailed to be 106 in. (2.7 m) long. The bolts were required to be 14 in. (360 mm) long. The welded alternative required the use of 70 lb (32 kg) of filler metal and, because SAW was used, 140 lb (64 kg) of flux.

The total fabrication time for the bolted connection, including cutting the splice plates, drilling the holes, and installing the bolts, was estimated at 84.3 hours. The welded alternative was estimated to require a total of 28.6 hours, which included the time to bevel the joints, weld the connection, and to remove weld tabs and backing. The bolted detail required 6,900 lb (3100 kg) of additional steel because of the size of the splice plates. The cost comparison did not include the cost of NDT.

Costs for labor and materials change, but at the time of the study, the welded connection cost about 80% less than the bolted alternative. The relative cost difference is not likely to have changed if North American labor rates are used (Miller, 1993). This study was accurate for the conditions studied but is not presented as representative of all welded versus bolted conditions. It does, however, demonstrate that simple sayings like "weld in the shop, bolt in the field" can lead to significantly flawed economic decisions.

This study was based on shop conditions. To estimate field conditions, the welding labor was doubled, but the bolting labor maintained constant. The spread in the estimated cost obviously decreased because the bolting cost didn't increase at all, which is unlikely. Still, the field-welded connection detail showed a 25% savings over the field-bolted alternative.

Chapter 18
Welding Safety

Welding is a safe operation when sufficient measures are taken to protect the welder from potential hazards. When these measures are overlooked or ignored, welders can encounter such dangers as electrical shock, overexposure to arc radiation, fumes and gases, and fire and explosions, any of which may result in fatal injuries.

ANSI Z49.1, *Safety in Welding, Cutting, and Allied Processes* (AWS, 2012a), available as a free download from AWS (www.aws.org), should be consulted for information on welding safety. A printed copy is also available for purchase from AWS.

From the AWS website, a variety of AWS Safety & Health Fact Sheets can also be downloaded. A partial list of Fact Sheets includes the following:

- Fumes and Gases
- Radiation
- Noise
- Electrical Hazards
- Fire and Explosion Prevention
- Burn Protection
- Mechanical Hazards
- Tripping and Falling
- Falling Objects
- Confined Spaces
- Contact Lens Wear
- Ergonomics in the Welding Environment
- Graphic Symbols for Precautionary Labels
- Pacemakers and Welding
- Electric and Magnetic Fields (EMF)
- Lockout/Tagout
- California Proposition 65
- Fluxes for Arc Welding and Brazing: Safe Handling and Use
- Metal Fume Fever
- Arc Viewing Distance
- Oxyfuel Safety: Check Valves and Flashback Arrestors
- Grounding of Portable and Vehicle Mounted Welding Generators
- Cylinders: Safe Storage, Handling and Use
- Eye and Face Protection for Welding and Cutting Operations
- Personal Protective Equipment (PPE) for Welding and Cutting
- Ventilation for Welding and Cutting
- Respiratory Protection Basics for Welding Operations
- Welding Cables
- Asbestos Hazards Encountered in the Welding and Cutting Environment
- Combustible Dust Hazards in the Welding and Cutting Environment

Safety information is also available from manufacturers of welding equipment and consumables. Warning labels on machines and consumable packaging should be read and followed. Safety data sheets (SDS), formerly known as material safety data sheets (MSDS), should also be read and followed.

ACRONYMS

ABC	applicable building code
AC	alternating current
AESS	architecturally exposed structural steel
AGA	American Galvanizers Association
AISC	American Institute of Steel Construction
AISI	American Iron and Steel Institute
ANSI	American National Standards Institute
AASHTO	American Association of State Highway and Transportation Officials
AHJ	authority having jurisdiction
API	American Petroleum Institute
ASCE	American Society of Civil Engineers
ASM	American Society for Metals
ASME	American Society of Mechanical Engineers
ASNT	American Society of Nondestructive Testing
ASTM	American Society for Testing and Materials
AWS	American Welding Society
BFP	bolted flange plate
BU	backup (i.e., backup bars or backing strips)
CAG	carbon arc gouging
CC	constant current
CE	carbon equivalent
CE_N	carbon equivalent based on Yurioka and Suzuki (1990)
CE_Z	carbon equivalent based on Japanese Industrial Standard G 3129 for prediction cracking in galvanized products
CG	center of gravity
CJP	complete joint penetration
CP	constant potential
CPRP	Connection Prequalification Review Panel
CTS	controlled thermal severity
CTW	abbreviation of CTWD
CTWD	contact tip to work distance
CV	constant voltage
CVN	Charpy V-notch
DC	direct current
EGW	electrogas welding
EOR	engineer of record
ERW	electric resistance welding
ESO	electrical stickout
ESW	electroslag welding
ESW-NG	narrow gap electroslag welding
FCAW	flux-cored arc welding
FCAW-G	gas-shielded flux-cored arc welding
FCAW-S	self-shielded flux-cored arc welding
FCP	fracture control plan
FEMA	Federal Emergency Management Agency
FHWA	Federal Highway Administration
FL	fusion line
FP	full penetration
G-BOP	gapped-bead-on-plate
GMAW	gas metal arc welding
GMAW-P	gas metal arc welding—pulsed arc
GMAW-S	gas metal arc welding—short-circuit arc
GTAW	gas tungsten arc welding
HAZ	heat affected zone
HPS	high performance steel
HSS	hollow structural section
IMF	intermediate moment frame
JIS	Japanese Industrial Standards
KBB	Kaiser bolted bracket
LAST	lowest anticipated service temperature
LMAC	liquid metal assisted cracking
LME	liquid metal embrittlement
LOF	lack of fusion
MAG	metal active gas
MIG	metal inert gas
MSDS	material safety data sheets

MT	magnetic testing
NA	neutral axis
NDE	nondestructive examination
NDT	nondestructive testing
NEMA	National Electrical Manufacturer's Association
NRC	Nuclear Regulatory Commission
OEM	original equipment manufacturer
OFC	oxyfuel gas cutting
OFW	oxyfuel gas welding
OSHA	Occupational Safety and Health Administration
PAC	plasma arc cutting
PAUT	phased array ultrasonic testing
PJP	partial joint penetration
P/O	perform/observe
PQR	procedure qualification record
PT	penetrant testing
PWHT	post-weld heat treatment
Q&T	quenched and tempered
QA	quality assurance
QC	quality control
QCI	quality control inspector
QST	quenching and self-tempering
RA	reduction in area
RBS	reduced beam section
RSW	resistance spot welding
RT	radiographic testing
SAC	The Structural Engineers Association of California (SEAOC), the Applied Technology Council (ATC), and the Consortium of Universities for Research in Earthquake Engineering (CUREE)
SAW	submerged arc welding
SDI	Steel Deck Institute
SDS	safety data sheets
SFRS	seismic force-resisting system
SMAW	shielded metal arc welding
SMF	special moment frame
SO	stickout
SW	stud welding
TIG	tungsten inert gas
TMCP	thermo-mechanical control process
UT	ultrasonic testing
VT	visual testing
VV	variable voltage
WPS	welding procedure specifications
WUF	welded unreinforced flange
WUF-W	welded unreinforced flange, welded web

References

AASHTO (2016), *LRFD Bridge Construction Specification*, 3rd Ed, with 2010, 2011, 2012, 2014, 2015 and 2016 Interim Revisions, American Association of State Highway and Transportation Officials, Washington, DC.

AGA (2009), *Welding and Hot-Dip Galvanizing*, American Galvanizers Association, Centennial, CO.

AGA (2015), *Design Guide—The Design of Products to Be Hot-Dip Galvanized after Fabrication*, American Galvanizers Association, Centennial, CO.

AISC (1994a), *Proceedings of the AISC Special Task Committee on the Northridge Earthquake Meeting*, March 14–15, American Institute of Steel Construction, Chicago, IL.

AISC (1994b), *Load and Resistance Factor Design Manual of Steel Construction*, 2nd Ed., American Institute of Steel Construction, Chicago, IL.

AISC (1997), *Engineering and Quality Criteria for Steel Structures, Common Questions Answered*, 4th Ed., American Institute of Steel Construction, Chicago, IL.

AISC (2002), *Seismic Provisions for Structural Steel Buildings*, ANSI/AISC 341-02, American Institute of Steel Construction, Chicago, IL.

AISC (2005a), *Seismic Provisions for Structural Steel Buildings*, ANSI/AISC 341-05, American Institute of Steel Construction, Chicago, IL.

AISC (2005b), *Specification for Structural Steel Buildings*, ANSI/AISC 360-05, American Institute of Steel Construction, Chicago, IL.

AISC (2010a), *Seismic Provisions for Structural Steel Buildings*, ANSI/AISC 341-10, American Institute of Steel Construction, Chicago, IL.

AISC (2010b), *Specification for Structural Steel Buildings*, ANSI/AISC 360-10, American Institute of Steel Construction, Chicago, IL.

AISC (2016a), *Code of Standard Practice for Steel Buildings and Bridges*, ANSI/AISC 303-16, American Institute of Steel Construction, Chicago, IL.

AISC (2016b), *Prequalified Connections for Special and Intermediate Steel Moment Frames for Seismic Applications*, ANSI/AISC 358-16, American Institute of Steel Construction, Chicago, IL.

AISC (2016c), *Seismic Provisions for Structural Steel Buildings*, ANSI/AISC 341-16, American Institute of Steel Construction, Chicago, IL.

AISC (2016d), *Specification for Structural Steel Buildings*, ANSI/AISC 360-16, American Institute of Steel Construction, Chicago, IL.

AISC (2017), *Steel Construction Manual*, 15th Ed., American Institute of Steel Construction, Chicago, IL.

ASCE (2016), *Minimum Design Loads and Associated Criteria for Buildings and Other Structures*, ASCE/SEI 7-16, American Society of Civil Engineers, Reston, VA.

ASM (1997), *Weld Integrity and Performance: A Source Book Adapted from ASM International Handbooks, Conference Proceedings and Technical Books*, ASM International, Materials Park, OH.

ASTM (1932), *Specification for Structural Rivet Steel*, ASTM A141, ASTM International, West Conshohocken, PA.

ASTM (1939), *Specification for Steel for Buildings*, ASTM A9, American Society for Testing and Materials, West Conshohocken, PA.

ASTM (1958), *Specification for Structural Steel for Welding*, ASTM A373, ASTM International, West Conshohocken, PA.

ASTM (1963), *Standard Specification for High-Strength Low-Alloy Structural Steel*, ASTM A242, ASTM International, West Conshohocken, PA.

ASTM (1967), *Specification for Steel for Bridges and Buildings*, ASTM A7, ASTM International, West Conshohocken, PA.

ASTM (2007), *Standard Specification for Quenched and Tempered Low-Alloy Structural Steel Plate with 70 ksi [485 MPa] Minimum Yield Strength to 4 in. [100 mm} Thick*, ASTM A852/A852M-03, ASTM International, West Conshohocken, PA.

ASTM (2009), *Standard Specification for Structural Steel for Bridges*, ASTM A709/A709M-09a, ASTM International, West Conshohocken, PA.

ASTM (2012), *Standard Specification for Steel Castings, Ferritic and Martensitic, for Pressure-Containing Parts, Suitable for Low-Temperature Service*, ASTM 352/A352M-06, ASTM International, West Conshohocken, PA.

ASTM (2013), *Standard Specification for High-Strength Low-Alloy Structural Steel*, ASTM A242/A242M-13, ASTM International, West Conshohocken, PA.

ASTM (2014), *Standard Practice for Safeguarding Against Embrittlement of Hot-Dip Galvanized Structural Steel Products and Procedure for Detecting Embrittlement*, ASTM A143/A143M-07, ASTM International, West Conshohocken, PA.

ASTM (2016), *Selected ASTM Standards for Structural Steel Fabrication*, American Institute of Steel Construction, Chicago, IL.

ASTM (2017a), *Standard Terminology Relating to Steel, Stainless Steel, Related Alloys, and Ferroalloys*, ASTM A941-17, ASTM International, West Conshohocken, PA.

ASTM (2017b), *Standard Specification for Straight Beam Ultrasonic Examination of Rolled Steel Structural Shapes*, ASTM A898/A898M-17, ASTM International, West Conshohocken, PA.

Avent, R.R. and Mukai, D.J. (2001), "What You Should Know About Heat Straightening Repair of Damaged Steel," *Engineering Journal*, AISC, Vol. 38, No. 1, pp. 27–49.

AWS (1972), *Welding Zinc-Coated Steel*, AWS D19.0-72, American Welding Society, Miami, FL.

AWS (1996), *Structural Welding Code—Steel*, AWS D1.1/D1.1M:1996, American Welding Society, Miami, FL.

AWS (2005a), *Specification for Carbon Steel Electrodes and Rods for Gas Shielded Arc Welding*, AWS A5.18/A5.18M:2005, American Welding Society, Miami, FL.

AWS (2005b), *Specification for Carbon Steel Electrode for Flux Cored Arc Welding*, AWS A5.20/A5.20M:2005, American Welding Society, Miami, FL.

AWS (2005c), *Specification for Low-Alloy Steel Electrodes and Rods for Gas Shielded Arc Welding*, AWS A5.28/A5.28M:2005, American Welding Society, Miami, FL.

AWS (2005d), *Structural Welding Code—Seismic Supplement*, AWS D1.8/D1.8M:2005, American Welding Society, Miami, FL.

AWS (2006), *Structural Welding Code—Steel*, AWS D1.1/D1.1M:2006, American Welding Society, Miami, FL.

AWS (2007), *Structural Welding Code—Stainless Steel*, AWS D1.6/D1.6M:2007, American Welding Society, Miami, FL.

AWS (2008), *Structural Welding Code—Sheet Steel*, AWS D1.3/D1.3M:2008, American Welding Society, Miami, FL.

AWS (2009), *Structural Welding Code—Seismic Supplement*, AWS D1.8/D1.8M:2009, American Welding Society, Miami, FL.

AWS (2010a), *Guide for Strengthening and Repairing Existing Structures*, AWS D1.7/D1.7M:2010, American Welding Society, Miami, FL.

AWS (2010b), *Specification for Classification of Weldable Primers*, AWS D3.9:2010, American Welding Society, Miami, FL.

AWS (2010c), *Specification for Low-Alloy Steel Electrode for Flux Cored Arc Welding*, AWS A5.29/A5.29M:2010, American Welding Society, Miami, FL.

AWS (2010d), *Standard Welding Terms and Definitions*, AWS A3.0/A3.0M:2010, American Welding Society, Miami, FL.

AWS (2011), *Structural Welding Code—Reinforcing Steel*, AWS D1.4/D1.4M:2011, American Welding Society, Miami, FL.

AWS (2012a), *Safety in Welding, Cutting, and Allied Processes*, ANSI Z49.1:2012, American Welding Society, Miami, FL.

AWS (2012b), *Specification for Carbon Steel Electrodes*, AWS A5.1/A5.1M:2012, American Welding Society, Miami, FL.

AWS (2012c), *Specification for Low-Alloy Steel Electrodes and Rods for Gas Shielded Arc Welding*, AWS A5.36/A5.36M:2012, American Welding Society, Miami, FL.

AWS (2012d), *Standard Symbols for Welding, Brazing, and Nondestructive Examination*, AWS A2.4:2012, American Welding Society, Miami, FL.

AWS (2013), *Safety and Health Fact Sheet No. 4—Chromium and Nickel in Welding Fume*, American Welding Society, Miami, FL.

AWS (2014a), *Safety and Health Fact Sheet No. 25—Metal Fume Fever*, American Welding Society, Miami, FL.

AWS (2014b), *Specification for Low-Alloy Steel Electrodes for Shielded Metal Arc Welding*, AWS A5.5/A5.5M:2014, American Welding Society, Miami, FL.

AWS (2014c), *Structural Welding Code—Aluminum*, AWS D1.2/D1.2M:2014, American Welding Society, Miami, FL.

AWS (2015a), *Bridge Welding Code*, AASHTO/AWS D1.5/D1.5M:2015, American Welding Society, Miami, FL.

AWS (2015b), *Guide for the Visual Examination of Welds*, AWS B1.11M/B1.11:2015, American Welding Society, Miami, FL.

AWS (2015c), *Structural Welding Code—Steel*, AWS D1.1/D1.1M:2015, American Welding Society, Miami, FL.

AWS (2015d), *Structural Welding Code—Titanium*, AWS D1.9/D1.9M:2015, American Welding Society, Miami, FL.

AWS (2016), *Structural Welding Code—Seismic Supplement*, AWS D1.8/D1.8M:2016, American Welding Society, Miami, FL.

Baddoo, N. (2013), *Structural Stainless Steel*, Design Guide 27, AISC, Chicago, IL.

Bailey, N., Coe, F.R., Gooch, T.G., Hart, P.H.M., Jenkins, N. and Pargeter, R.J. (1973), *Welding Steels Without Hydrogen Cracking*, ASM International, Materials Park, OH, and Abington Publishing, Cambridge, England.

Bailey, N. (1994), *Weldability of Ferritic Steels*, ASM International, Materials Park, OH, and Abington Publishing, Cambridge, England.

Barsom, J.M. (2003), "Structural Failures: Effects of Joint Design," *Proceedings of the North American Steel Construction Conference*, AISC, Baltimore, MD, April 2–5.

Barsom, J.M. (2016), Personal communication, Phone, D. Miller.

Barsom, J.M., Johnson, M. and Mohr, B. (2000), "Evaluation of Mechanical Properties in Full-Scale Connections and Recommended Minimum Weld Toughness for Moment Resisting Frames," SAC Background Documents, SAC/BD-00/14, SAC Joint Venture, Sacramento, CA.

Barsom, J.M. and Korvink, S. (1997), "Through-Thickness Properties of Structural Steels," SAC Background Documents, SAC/BD-97/01, SAC Joint Venture, Sacramento, CA.

Barsom, J.M. and Rolfe, S.T. (1999), *Fracture and Fatigue Control in Structures: Applications of Fracture Mechanics*, 3rd Ed., ASTM International, West Conshohocken, PA.

Blodgett, O.W. (1966), *Design of Welded Structures*, James F. Lincoln Arc Welding Foundation, Cleveland, OH.

Blodgett, O.W. (1982), "Weld Failures: They Could Be the Result of Violating Simple Design Principles," *Welding Journal*, Vol. 61, No. 3, American Welding Society, Miami, FL.

Blodgett, O.W. (1993), "The Challenge of Welding Jumbo Shapes, Part 1: Increasing Ductility of Connections," *Welding Innovation*, James F. Lincoln Arc Welding Foundation, Vol. XI.

Blodgett, O.W. (1995), "Details to Increase Ductility in SMRF Connections," *Welding Innovation*, James F. Lincoln Arc Welding Foundation, Vol. XII, No. 2, pp. 16–18.

Blodgett, O.W. and Miller, D.K. (1993), "The Challenge of Welding Jumbo Shapes," *Welding Innovation*, James F. Lincoln Arc Welding Foundation, Vol. X, No.1, pp. 3–16.

Boake, T.M. (2012), *Understanding Steel Design—An Architectural Design Manual*, Birkhauser GmbH, Basel, Switzerland.

Boulanger, S. and Hughes, C. (2015), "Working with Large Trusses," *Modern Steel Construction*, AISC, February.

Boulanger, S., Drucker, C., Kruth L.F., Miller, K.M. and Boake, T.M. (2016), "The Splice is Right," *Modern Steel Construction*, AISC, March.

Brockenbrough, R.L. and Schuster, J. (2017), *Rehabilitation and Retrofit*, Design Guide 15, 2nd Ed., AISC, Chicago, IL.

Cattan, J. (1995), *Statistical Analysis of Charpy V-Notch Toughness for Steel Wide Flange Structural Shapes*, AISC, Chicago, IL.

Doty, W.D. (1987), "Procedures for Thermal Cutting and Welding Heavy Structural Shapes," *Proceedings of the National Engineering Conference and Conference of Operating Personnel*, AISC, New Orleans, LA, April 29–May 2, pp. 16-1–16-6.

Drucker, C. (2014), "On the Right Path," *Modern Steel Construction*, AISC, November.

El-Tawil, S. (1998), Strength and Ductility of FR Welded-Bolted Connections, *SAC Background Documents*, SAC/BD-98/01, SAC Joint Venture, Sacramento, CA.

FEMA (1995), *Interim Guidelines: Evaluation, Repair, Modification and Design of Welded Steel Moment Frame Structures*, FEMA 267 (SAC-95-02), Federal Emergency Management Agency, Washington, DC.

FEMA (1997), *Background Reports: Metallurgy, Fracture Mechanics, Welding, Moment Connections, and Frame Systems Behavior*, FEMA 288 (SAC-95-09), Federal Emergency Management Agency, Washington, DC.

FEMA (2000a), *Recommended Seismic Design Criteria for New Steel Moment-Frame Buildings*, FEMA 350, Federal Emergency Management Agency, Washington, DC.

FEMA (2000b), *Recommended Seismic Evaluation and Upgrade Criteria for Existing Welded Steel Moment-Frame Buildings*, FEMA 351, Federal Emergency Management Agency, Washington, DC.

FEMA (2000c), *Recommended Postearthquake Evaluation and Repair Criteria for Welded Steel Moment-Frame Buildings*, FEMA 352, Federal Emergency Management Agency, Washington, DC.

FEMA (2000d), *Recommended Specifications and Quality Assurance Guidelines for Steel Moment Frame Construction for Seismic Applications*, FEMA 353, Federal Emergency Management Agency, Washington, DC.

Fisher, J.M. and Kloiber, L.A. (2006), *Base Plate and Anchor Rod Design*, Design Guide 1, 2nd Ed., AISC, Chicago, IL.

Fisher, J.W. (1984), *Fatigue and Fracture in Steel Bridges: Case Studies*, Wiley-Interscience, New York, NY.

Fisher, J.W. and Pense, A.W. (1987), "Procedures for Thermal Cutting and Welding Heavy Structural Shapes," *Proceedings of the National Engineering Conference and Conference of Operating Personnel*, AISC, New Orleans, LA, April 29–May 2, pp. 18-1–18-47.

Frank, K.H. (1997), "Structural Steels, Their Physical and Metallurgical Properties," FEMA-288 (SAC-95-09), *Background Reports: Metallurgy, Fracture Mechanics, Welding, Moment Connections and Frame Systems Behavior*, Federal Emergency Management Agency, Washington, DC.

Gagnon, D. and Kennedy, D. (1987), "Behavior and Ultimate Strength of Partial Joint Penetration Groove Welds," Department of Civil Engineering, University of Alberta, Edmonton, Canada.

Garlich, M.J. (2000), "Welding to Existing Structures," *Proceedings of the North American Steel Construction Conference*, AISC, Las Vegas, NV.

Gensamer, M. (1941), "Strength of Metals Under Combined Stresses," ASM International, Metals Park, OH.

Gibala, R. and Hehemann, R.F. (1984), *Embrittlement and Stress Corrosion Cracking*, ASM International, Metals Park, OH.

Hamburger, R.O. (2009), *Earthquakes and Seismic Design*, Facts for Steel Buildings Number 3, AISC, Chicago, IL.

Houston, W. and Houston, I. (2015), "Solid Bond," *Modern Steel Construction*, AISC, June.

JIS (2005), *High Tensile Strength Steel for Tower Structural Purposes*, JIS G 3129, Japanese Standards Association.

Johnson, M.Q. (1997), "Evaluation of the Effect of Welding Procedures on the Mechanical Properties of FCAW-S and SMAW Weld Metal Used in Construction of Seismic Moment Frames," SAC Background Documents, SAC/BD-96/01 thru SAC/BD-00/30, SAC Joint Venture, Sacramento, CA.

Johnson, M. and Ramirez, J. (2000), "Preliminary Evaluation of Heat Affected Zone Toughness in Structural Shapes used in the Construction of Seismic Moment Frames," SAC Background Documents, SAC/BD-00/13, SAC Joint Venture, Sacramento, CA.

Kelly, B. (1997), *Fatigue Performance of Repair Welds*, Masters Thesis, Lehigh University, Bethlehem, PA.

Kinstler, T.J. (2005), "Current Knowledge of the Cracking of Steels During Galvanizing," American Institute of Steel Construction Report Number 3213, GalvaScience LLC, Springville, AL.

Klimpel, A., Lisiecki, A. and Szlek, J. (2000), "Welding of Girders to Insert Plates of Composite Steel-Concrete Structures," *Journal of Achievements in Materials and Manufacturing Engineering*, Vol. 24, No. 1, Gliwice, Poland.

Kloiber, L. and Thornton, W. (2001), "Design of Skewed Connections," *Engineering Journal*, AISC, Vol. 30, No.3, pp. 140–147.

Kou, S. (2003), *Welding Metallurgy*, 2nd Ed., John Wiley & Sons, Hoboken, NJ.

Lee, D., Cotton, S.C., Dexter, R.J., Hajjar, J.F., Ye, Y. and Ojard, S.D. (2002), "Column Stiffener Detailing and Panel Zone Behavior of Steel Moment Frame Connections," Structural Engineering Report No. ST-01-3.2, Department of Civil Engineering, University of Minnesota, Minneapolis, MN.

Lini, C. (2012), "Designing Welds for Skewed Shear Tabs," *Modern Steel Construction*, AISC, July.

Lincoln Foundation (1957), *Procedure Handbook of Arc Welding*, 11th Ed., The James F. Lincoln Arc Welding Foundation, Cleveland, OH.

McFadden, T. and Bennett, F.L. (1991), *Construction in Cold Regions—A Guide for Planners, Engineers, Contractors, and Managers*, John Wiley & Sons, New York, NY.

Meng, R.L. (1996), "Design of Moment End-Plate Connections for Seismic Loading," Doctoral Dissertation, Virginia Polytechnic Institute and State University, Blacksburg, VA.

Miller, D.K. (1993), "Consider Welded Vs. Bolted Connections for Jumbo Sections," *Welding Innovation*, James F. Lincoln Arc Welding Foundation, Vol. X, No. 1, p. 15.

Miller, D.K. (1998a), "Consider Penetration When Determining Fillet Weld Size," *Welding Innovation*, James F. Lincoln Arc Welding Foundation, Vol. XV, No. 1, pp. 20–22.

Miller, D.K. (1998b), "Consider Direction of Loading When Sizing Fillet Welds," *Welding Innovation*, James F. Lincoln Arc Welding Foundation, Vol. XV, No. 2, pp. 8–9.

Miller, D.K. (2002), "Designing Fillet Welds for Skewed T-Joints—Part 1," *Welding Innovation*, James F. Lincoln Arc Welding Foundation, Vol. XIX, No. 1, pp. 7–11.

Miller, D.K. (2010), "Welding Heavy Structural Steel—Successfully," *Modern Steel Construction*, AISC, April.

Miller, D.K. (2014), "Revisiting W1 Indications," *Modern Steel Construction*, AISC, March.

Packer, J., Sherman, D. and Lecce, M. (2010), *Hollow Structural Section Connections*, Design Guide 24, AISC, Chicago, IL.

Paret, T.F. (1999), "Clarifying the Extent of Northridge-Induced Weld Fracturing; Examining the Related Issue of UT Reliability," SAC Background Documents, SAC/BD-99/10, SAC Joint Venture, Sacramento, CA.

Pense, A. (2004), *HPS Corrugated Web Girder Fabrication Innovations—Part 4 Literature and Experimental Study of Strain Aging in HPS and Other Bridge Steels*, Lehigh University, Bethlehem, PA.

Poag, G. and Zervoudis, J. (2003), *Influence of Various Parameters on Steel Cracking During Galvanizing*, Teck Cominco Metals Ltd. Product Technology Centre, November.

Quintana, M.A. (1998), "The Effects of Intermixed Weld Metal on Mechanical Properties—Part 3," *Proceedings on Welded Construction in Seismic Areas*, AWS, Maui, Hawaii, October 6–8, pp. 103–120.

Ricker, D.T. (1987), "Field Welding to Existing Steel Structures," *Proceedings of the National Engineering Conference and Conference of Operating Personnel*, AISC, New Orleans, LA, April 29–May 2, pp. 42-1–42-25.

Ricles, J. M. (2000), "Development and Evaluation of Improved Details for Ductile Welded Unreinforced Flange Connections," SAC Background Documents, SAC/BD-00/24, SAC Joint Venture, Sacramento, CA.

SAC (1995), SAC 94-01, Invitational Workshop on Steel Seismic Issues, Los Angeles, CA.

SDI (2006), *SDI Manual of Construction with Steel Deck*, Steel Deck Institute, Fox River Grove, IL.

Stout, R.D. (1987), *Weldability of Steels*, Welding Research Council, New York, NY.

Thomas, M. and Kulak, G. (1987), *Strength of Joints that Combine Bolts and Welds*, University of Alberta, Edmonton, Canada.

Tide, R.H.R. (1987), "Basic Considerations When Reinforcing Steel Structures," *Proceedings of the National Engineering Conference and Conference of Operating Personnel*, AISC, New Orleans, LA, April 29–May 2, pp. 53-1–53-16.

Tomoe Corporation (2001), *Zinc Assisted Cracking on Big Scale Steel Structures and Preventive Methods*, Tomoe Research & Development Ltd., Tokyo, Japan.

Valanti, V. (1970), *Welding at Temperatures Lower Than Normal Workshop Temperatures, Plus 15 Degrees Centigrade*, Elektriska Svetsning Aktiebolaget, Sweden.

Vermeersch, M., Waele, D. and Van Caenegm, N. (2011), "LME Susceptibility of Galvanised Welded Structures of High Strength Steels," *Sustainable Construction and Design*, Belgium, Vol. 2, No. 3.

Watkins, C., Toellner, B.W., Laknejadi, K. and Abbas, E. (2013), "Effect of Powder Actuated Fasteners on the Seismic Performance of Steel Moment Frame Connections," *Proceedings of the SEI Structures Congress*, ASCE, Pittsburgh, PA, May 2–4.

Yurioka, N. and Suzuki, H. (1990), "Hydrogen Assisted Cracking in C-Mn and Low Alloy Steel Weldments," *International Materials Reviews*, Vol. 35, No. 4, pp. 217–249.

Index

Smarter. Stronger. Steel.

American Institute of Steel Construction
312.670.2400 | www.aisc.org

D821-17