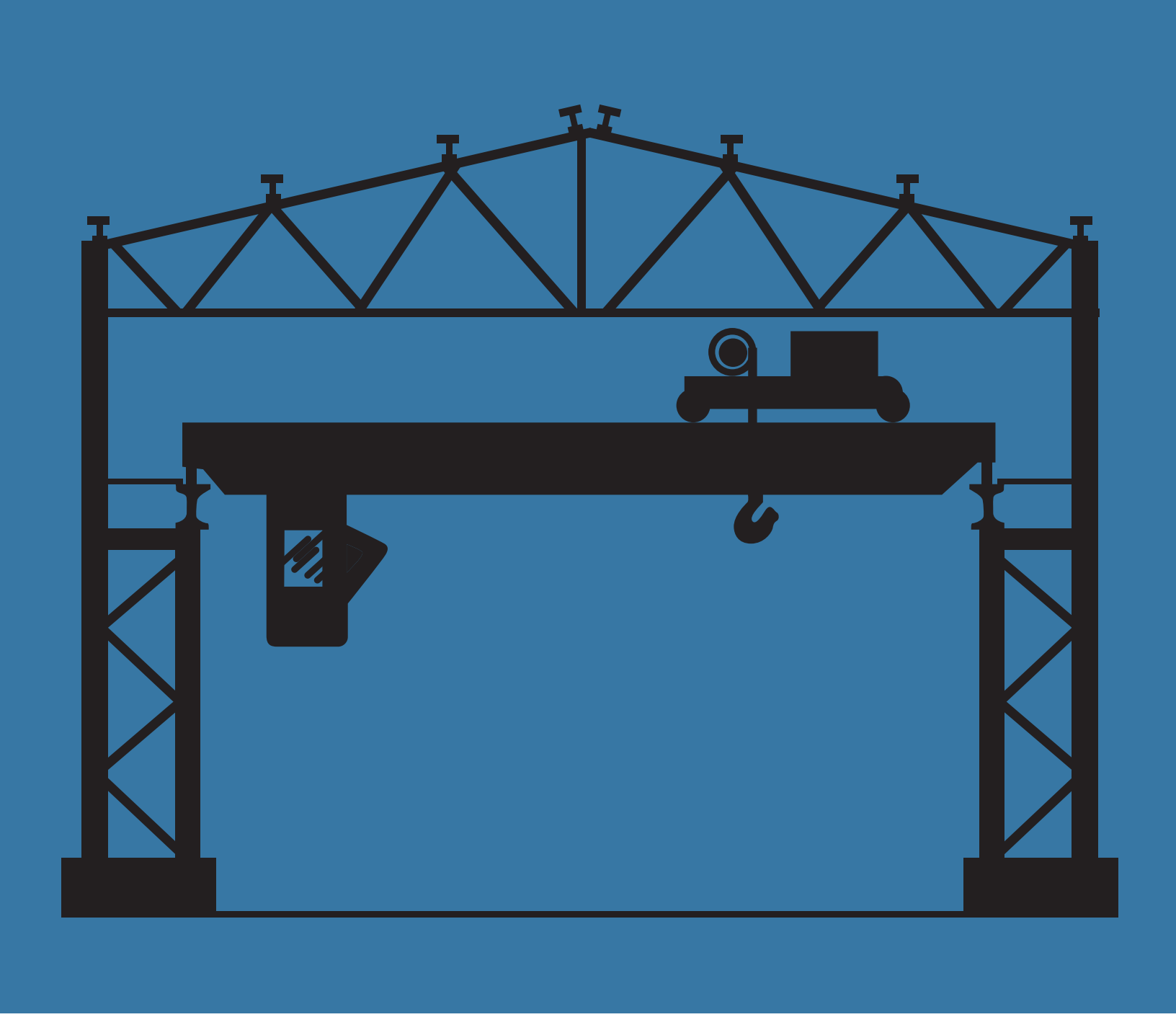

Design Guide 7

Industrial Building Design

Third Edition

Smarter.
Stronger.
Steel.

Design Guide 7

Industrial Building Design

Third Edition

James M. Fisher, PE, PhD

American Institute of Steel Construction

The information presented in this publication has been prepared following recognized principles of design and construction. While it is believed to be accurate, this information should not be used or relied upon for any specific application without competent professional examination and verification of its accuracy, suitability and applicability by a licensed engineer or architect. The publication of this information is not a representation or warranty on the part of the American Institute of Steel Construction, its officers, agents, employees or committee members, or of any other person named herein, that this information is suitable for any general or particular use, or of freedom from infringement of any patent or patents. All representations or warranties, express or implied, other than as stated above, are specifically disclaimed. Anyone making use of the information presented in this publication assumes all liability arising from such use.

Caution must be exercised when relying upon standards and guidelines developed by other bodies and incorporated by reference herein since such material may be modified or amended from time to time subsequent to the printing of this edition. The American Institute of Steel Construction bears no responsibility for such material other than to refer to it and incorporate it by reference at the time of the initial publication of this edition.

Printed in the United States of America

Author

James M. Fisher, Ph.D., P.E., DIST.M.ASCE, is Vice President Emeritus of CSD Engineers. He is a member of the AISC Committee on Specifications and its task committee on Member Design and Stability. He also serves as chairman of the committee developing the *Seismic Provisions for Evaluation and Retrofit of Structural Steel Buildings*, AISC 342.

Acknowledgments

The author thanks the American Iron and Steel Institute for funding the first edition of this Guide and the American Institute of Steel Construction for funding the second and third editions. The author also appreciates the guidance from the AISC review committee and staff members who contributed many suggestions:

Steve Bohm
Eric Bolin
Cynthia Duncan
Lou Geschwindner
Roger LaBoube
Steve Herlache
Pete Cheever
Larry Kloiber
Larry Kruth
Margaret Matthew
Curt Miller

Preface

This Design Guide provides guidance for the design of both light and heavy industrial buildings. As in previous editions, buildings with and without overhead cranes are discussed. The third edition of this Design Guide incorporates the 2016 AISC *Specification* and the 15th Edition of the AISC *Steel Construction Manual*. Analysis and design examples are provided in greater detail than in the previous editions of the Design Guide.

Table of Contents

Introduction

Although the basic structural and architectural components of industrial buildings are relatively simple, combining all of the elements into a functional economical building can be a complex task. Criteria to accomplish this task can be stated. The purpose of this Guide is to provide the industrial building designer with guidelines and design criteria for the design of buildings without cranes or for buildings with light-to-medium duty cycle cranes. Part 1 deals with general topics on industrial buildings. Part 2 deals with structures containing cranes. Requirements for seismic detailing for industrial buildings have not been addressed in this Guide. Any special detailing for seismic conditions must be addressed by the designer.

Most industrial buildings primarily serve as an enclosure for production and/or storage. The design of industrial buildings may seem logically the province of the structural engineer. It is essential to realize that most industrial buildings involve much more than structural design. The designer may assume an expanded role and may be responsible for site planning, establishing grades, handling surface drainage, parking, onsite traffic, building aesthetics, and perhaps, landscaping. Access to rail and the establishment of proper floor elevations (depending on if direct fork truck entry to rail cars is required) are important considerations. Proper clearances to sidings and special attention to curved siding and truck grade limitations are also essential.

PART 1
INDUSTRIAL BUILDINGS—GENERAL

Chapter 1
Loading Conditions and Load Combinations

Loading conditions and load combinations for industrial buildings without cranes are well established by building codes.

Loading conditions are categorized as follows:

1. *Dead load*: This load represents the weight of the structure and its components and is usually expressed in pounds per square foot. In an industrial building, the building use and industrial process usually involve permanent equipment that is supported by the structure. This equipment can sometimes be represented by a uniform load (known as a collateral load), but the points of attachment are usually subjected to concentrated loads, which require a separate analysis to account for the localized effects.
2. *Live load*: This load represents the force imposed on the structure by the occupancy and use of the building. Building codes give minimum design live loads in pounds per square foot, which vary with the classification of occupancy and use. While live loads are expressed as uniform, as a practical matter any occupancy loading is inevitably nonuniform. The degree of nonuniformity that is acceptable is a matter of engineering judgment. Some building codes deal with nonuniformity of loading by specifying concentrated loads in addition to uniform loading for some occupancies. In an industrial building, often the use of the building may require a live load in excess of the code-stated minimum. Often this value is specified by the owner or calculated by the engineer. Also, the loading may be in the form of significant concentrated loads as in the case of storage racks or machinery.
3. *Snow load*: Most codes differentiate between roof live load and snow load. Snow loads are a function of local climate, roof slope, roofing type, terrain, building internal temperature, and building geometry. These factors may be treated differently by various codes.
4. *Rain load*: This load is now recognized as a separate loading condition. In the past, rain was accounted for in the live load. However, some codes have a more refined standard. Rain loading can be a function of storm intensity, roof slope, and roof drainage. There is also the potential for rain on snow in certain regions.
5. *Wind load*: This load is well codified and a function of local climate conditions, building height, building geometry, and exposure as determined by the surrounding environment and terrain. Building codes account for increases in local pressure at edges and corners and often have stricter standards for individual components than for the gross building. Wind can apply both inward and outward forces to various surfaces on the building exterior and can be affected by the size of wall openings. Where wind forces produce overturning or net upward forces, there must be an adequate counterbalancing structural dead weight, or the structure must be anchored to an adequate foundation.
6. *Earthquake load*: Seismic loads are established by building codes and are based on:
   a. The degree of seismic risk.
   b. The degree of potential damage.
   c. The possibility of total collapse.
   d. The feasibility of meeting a given level of protection.

   Earthquake loads in building codes are usually equivalent static loads. Seismic loads are generally a function of:
   a. The geographical and geological location of the building.
   b. The use of the building.
   c. The nature of the building structural system.
   d. The dynamic properties of the building.
   e. The dynamic properties of the site.
   f. The weight of the building and the distribution of the weight.

Load combinations are formed by adding the effects of loads from each of the load sources cited in the preceding

text. Codes or industry standards often give specific load combinations that must be satisfied. It is not always necessary to consider all loads at full intensity. Also, certain loads are not required to be combined at all. For example, wind loads need not be combined with seismic loads. In some cases, only a portion of a load must be combined with other loads. When a combination does not include loads at full intensity, it represents a judgment as to the probability of simultaneous occurrence with regard to time and intensity.

Chapter 2
Owner-Established Criteria

Every industrial building is unique. Each is planned and constructed to requirements relating to building usage, the process involved, specific owner requirements and preferences, site constraints, cost, and building regulations. The process of design must balance all of these factors. The owner must play an active role in communicating to the designer all requirements specific to the building such as:

1. Area, bay size, plan layout, aisle location, future expansion provisions
2. Clear heights
3. Relationship between functional areas, production flow, acoustical considerations
4. Exterior appearance
5. Materials and finishes
6. Machinery, equipment, and storage method
7. Loads

There are instances where loads in excess of code minimums are required. Such cases call for owner involvement. The establishment of loading conditions provides a structure of adequate strength. A related set of criteria are needed to establish the serviceability behavior of the structure. Serviceability design considers such topics as deflection, drift, vibration, and the relation of the primary and secondary structural systems and elements to the performance of nonstructural components such as roofing, cladding, and equipment. Serviceability issues are not strength issues, but rather maintenance and human response considerations. Serviceability criteria are discussed in detail in AISC Design Guide 3, *Serviceability Design Considerations for Steel Buildings* (West et al., 2003), hereafter referred to as AISC Design Guide 3. Criteria taken from the Design Guide are presented in this text as appropriate.

As can be seen from this discussion, the design of an industrial building requires active owner involvement. This is also illustrated by the following topics: slab-on-ground design, jib cranes, interior vehicular traffic, and future expansion.

2.1 SLABS-ON-GROUND DESIGN

One important aspect to be determined in an industrial building design is the specific loading to which the floor slab will be subjected. Forklift trucks, rack storage systems, or wood dunnage supporting heavy manufactured items cause concentrated loads in industrial structures. The important point here is that these loadings are nonuniform. The slab-on-ground is thus often designed as a plate on an elastic foundation subject to concentrated loads.

It is common for owners to specify that slabs-on-ground be designed for a specific uniform loading (e.g., 500 psf). If a slab-on-ground is subjected to a uniform load, it will develop no bending moments. Minimum thickness and no reinforcement would be required. Real loads are not uniform, and an analysis using an assumed nonuniform load or the specific concentrated loading for the slab is required. An excellent reference for the design of slabs-on-ground is *Designing Floor Slabs on Grade* (Ringo and Anderson, 1996). In addition, the following guides provide useful information: the ACI *Guide for Concrete Floor and Slab Construction*, ACI 302.1R-15 (ACI, 2015), and *Guide to Design of Slabs-on-Ground,* ACI 360R-10 (ACI Committee 360, 2010).

2.2 JIB CRANES

Another loading condition that should be considered is the installation of jib cranes. Often the owner has plans to install such cranes at some future date, but because they are a purchased item and often installed by plant engineering personnel or the crane manufacturer, the owner may inadvertently neglect them during the design phase.

Jib cranes have a horizontal member known as a jib or boom that supports a moveable hoist fixed to a wall or column. Jib cranes that are simply added to a structure can create a myriad of problems, including column distortion and misalignment, column bending failures, crane runway and crane rail misalignment, and excessive column base shear. It is essential to know the location and size of jib cranes in advance so that columns can be properly designed and proper bracing can be installed if needed. Columns supporting jib cranes should be designed to limit the deflection at the end of the jib boom to the boom length divided by 225.

2.3 INTERIOR VEHICULAR TRAFFIC

The designer must establish the exact usage to which the structure will be subjected. Interior vehicular traffic is a major source of problems in structures. Forklift trucks can accidentally buckle the flanges of a column, shear off anchor rods in column bases, and damage walls.

Proper consideration and handling of the forklift truck problem may include some or all of the following:

1. Use of masonry or concrete exterior walls in lieu of metal panels. (Often the lowest section of wall

is masonry or concrete, and metal panels are used above.)

2. Installation of fender posts (bollards) for columns and walls may be required where speed and size of fork trucks are such that a column or load bearing wall could be severely damaged or collapsed upon impact.
3. Use of metal guard rails or steel plate adjacent to wall elements may be in order.
4. Curbs.

Lines defining traffic lanes painted on factory floors have never been successful in preventing structural damage from interior vehicular operations. The only realistic approach for solving this problem is to anticipate potential impact and damage and to install barriers and/or materials that can withstand such abuse.

2.4 FUTURE EXPANSION

Except where no additional land is available, every industrial structure is a candidate for future expansion. Lack of planning for such expansion can result in considerable expense.

When consideration is given to future expansion, there are a number of practical considerations that require evaluation.

1. The direction of principal and secondary framing members requires study. In some cases, it may prove economical to have a principal frame line along a building edge where expansion is anticipated and to design edge beams, columns, and foundations for the future loads. If the structure is large and any future expansion would require creation of an expansion joint at a juncture of existing and future construction, it may be prudent to have that edge of the building consist of nonload-bearing elements. Foundation design must also include provision for expansion.
2. Roof drainage must be considered. An addition that is constructed with low points at the junction of the roofs can present serious problems in terms of water, ice, and snow piling effects.
3. Lateral stability to resist wind and seismic loads is often provided by X-bracing in walls or by shear walls. Future expansion may require removal of such bracing. The structural drawings should indicate the critical nature of wall bracing and its location to prevent accidental removal. In this context, bracing can interfere with many plant production activities, and the importance of such bracing cannot be overemphasized to the owner and plant engineering personnel. Bracing should be located to provide the capability for future expansion without its removal.

2.5 DUST CONTROL/EASE OF MAINTENANCE

In certain buildings (e.g., food processing plants), dust control is essential. Ideally there should be no horizontal surfaces on which dust can accumulate. Hollow structural section (HSS) purlins reduce the number of horizontal surfaces compared to joists or C- or Z-shaped sections. If horizontal surfaces can be tolerated in conjunction with a regular cleaning program, C- or Z-shaped sections may be preferable to joists. The same thinking should be applied to the selection of main framing members (i.e., HSS or box sections may be preferable to wide-flange sections or trusses).

2.6 ELECTRICAL, PIPING, AND EQUIPMENT LOADS

The owner must indicate loads and locations of electrical, piping, and equipment loads. Process piping should be assumed to be full when calculating the loads on the structural system. Ductwork can be very critical to the load effects on the structure. It is wise to consider ductwork to be a minimum of half full and to consider the wet density of the material in the duct. Depending on the support system for equipment, temperature effects should be investigated.

The designer must also be aware of special concentrated loads as dictated in the 2015 *International Building Code* (ICC, 2015), hereafter referred to as the IBC, Section 1607.4 and Table 1607.1.

Snow drifts can result from rooftop equipment and piping. *Minimum Design Loads and Associated Criteria for Buildings and Other Structures* (ASCE, 2016), hereafter referred to as ASCE/SEI 7-16, should be consulted for the calculation of snow drifting.

Chapter 3
Roof Systems

The roof system is often the most expensive part of an industrial building (even though walls are costlier per square foot). Designing for a 20-psf mechanical surcharge load when only 10 psf is required adds cost over a large area.

Often the premise that guides the design is that the owner will always be hanging new piping or installing additional equipment, and a prudent designer will allow for this in the system. If this practice is followed, the owner should be consulted, and the decision to provide excess capacity should be that of the owner. The design live loads and collateral (equipment) loads should be clearly identified on the structural plans.

3.1 STEEL DECK FOR BUILT-UP OR MEMBRANE ROOFS

Decks are commonly 1½ in. deep, but deeper units are also available. The Steel Deck Institute (SDI) *Standard for Steel Roof Deck* (SDI, 2017b), has identified three standard profiles for 1½-in. steel deck—narrow rib, intermediate rib, and wide rib—and has published load tables for each profile for thicknesses varying from 0.0299 in. to 0.0478 in. (nominally 22 gage to 16 gage). These three profiles, listed in Table 3-1, are identified as NR, IR, and WR, and correspond to the manufacturers' designations A, F, and B, respectively. SDI identifies the standard profile for 3-in. deck as 3DR. A comparison of weights for each profile in various gages shows that strength-to-weight ratio is most favorable for wide-rib deck and least favorable for narrow-rib deck. In general, the deck selection that results in the least weight per square foot may be the most economical. However, consideration must also be given to the flute width because the insulation must span the flutes. In the northern areas of the United States, high roof loads and thick insulation generally make the wide-rib profile predominant. In the South, low roof loads and thinner insulation make the intermediate-rib profile common. Where very thin insulation is used, narrow-rib deck may be required, although this is not a common profile. In general, the lightest weight deck consistent with insulation thickness and span should be used.

In addition to the load, span, and thickness relations established by the load tables, there are other considerations in the selection of a profile and gage for a given load and span. First, SDI limits deflection due to a 200-lb concentrated load at midspan to the span divided by 240. Secondly, the SDI *Code of Standard Practice* (SDI, 2017a) has published a table of maximum recommended spans for construction and maintenance loads, and, finally FM Global's *Loss Prevention Data for Roofing Contractors* (FM Global, 2019) lists maximum spans for various profiles and gages, which are shown in Table 3-2.

FM Global requires a sidelap fastener between supports. This fastener prevents adjacent panels from deflecting differentially when a load exists at the edge of one panel but not on the edge of the adjacent panel. FM Global permits an overspan from its published tables of 6 in. (previously an overspan of 10% had been allowed) when "necessary to accommodate column spacing in some bays of the building. It should not be considered an original design parameter." SDI recommends that the sidelaps in cantilevers be fastened at 12 in. on center.

Steel deck can be attached to supports by welds or fasteners, which can be power or pneumatically installed or self-drilling and self-tapping. The SDI *Standard for Steel Roof Deck* requires a maximum attachment spacing of 18 in. along supports. FM Global requires the use of 12-in. spacing as a maximum, which is more common. The attachment of roof deck must be sufficient to provide bracing to the structural roof members, to anchor the roof to prevent uplift, and, in many cases, to serve as a diaphragm to carry lateral loads to the bracing. While the standard attachment spacing may be acceptable in many cases, decks designed as diaphragms may require additional connections. Diaphragm capacities can be determined from the SDI *Diaphragm Design Manual* (SDI, 2015).

Manufacturers of metal deck are constantly researching ways to improve section properties with maximum economy. Considerable differences in cost may exist between prices from two suppliers of identical deck shapes; therefore, the designer is urged to research the cost of the deck system carefully. A few cents per square foot savings on a large roof area can mean a significant savings to the owner.

Several manufacturers can provide steel roof deck and wall panels with special acoustical surface treatments for specific building use. Properties of such products can be obtained from the manufacturers. Special treatment for acoustical reasons must be specified by the owner.

3.2 METAL ROOFS

Standing-seam roof systems were first introduced in the late 1960s, and today many manufacturers produce standing seam panels. A difference between the standing-seam roof and lap-seam roof (through-fastener roof) is the manner in which two panels are joined to each other. The seam between two standing-seam panels is made in the field with a tool that

Table 3-1. SDI Recommended Spans*					
Recommended Maximum Spans for Construction and Maintenance Loads for Standard 1½-in. and 3-in. Roof Deck					
Deck Type		Span Condition	Gage Number	ASD Span (ft-in.)	ASD Cantilever Span (ft-in.)
NARROW RIB	NR22	Single	22	2'-11"	0'-10"
	NR20		20	3'-08"	1'-00"
	NR18		18	5'-00"	1'-03"
	NR16		16	6'-05"	1'-07"
	NR22	Double or Triple	22	3'-07"	
	NR20		20	4'-06"	
	NR18		18	6'-02"	
	NR16		16	7'-11"	
INTERMEDIATE RIB	IR22	Single	22	3'-05"	0'-11"
	IR20		20	4'-03"	1'-01"
	IR18		18	5'-10"	1'-06"
	IR16		16	7'-06"	1'-10"
	IR22	Double or Triple	22	4'-03"	
	IR20		20	5'-03"	
	IR18		18	7'-02"	
	IR16		16	9'-03"	
WIDE RIB	WR22	Single	22	5'-08"	1'-06"
	WR20		20	7'-00"	1'-10"
	WR18		18	9'-06"	2'-05"
	WR16		16	12'-02"	3'-00"
	WR22	Double or Triple	22	6'-11"	
	WR20		20	8'-07"	
	WR18		18	11'-08"	
	WR16		16	15'-00"	
DEEP RIB	DR22	Single	22	11'-11"	3'-04"
	DR20		20	15'-04"	4'-02"
	DR18		18	21'-01"	5'-07"
	DR16		16	27'-05"	7'-01"
	DR22	Double or Triple	22	14'-07"	
	DR20		20	18'-11"	
	DR18		18	26'-00"	
	DR16		16	33'-09"	

* From the *Manual of Construction with Steel Deck* (SDI, 2016). Reproduced with permission of the Steel Deck Institute.

Spans shown are calculated using 33-ksi steel and allowable strength design (ASD) and are considered to be conservative. Longer spans may be permitted when using load and resistance factor (LRFD) designs or for higher strength steels. Consult the deck manufacturer for further guidance.

Table 3-2. FM Global Data			
Types 1.5A, 1.5F, 1.5B, and 1.5BI Deck Nominal 1½-in. Depth/No Stiffening Grooves			
	22 Gage	20 Gage	18 Gage
Type 1.5A (Narrow rib)	4'-10"	5'-3"	6'-0"
Type 1.5F (Intermediate rib)	4'-11"	5'-5"	6'-3"
Type 1.5B, BI (Wide rib)	6'-0"	6'-6"	7'-5"

makes a cold-formed, weather-tight joint. (Note: Some panels can be seamed without special tools.) The joint is made at the top of the panel. The standing-seam roof is also unique in the manner in which it is attached to the purlins. The attachment is made with a clip concealed inside the seam. This clip secures the panel to the purlin and may allow the panel to move when experiencing thermal expansion or contraction.

In standing-seam panels, a continuous single-skin membrane results after the sidelap seam is made because through-the-roof fasteners have been eliminated. The elevated seam and single-skin member provides a watertight system. The ability of the roof to experience unrestrained thermal movement eliminates damage to insulation and structure caused by temperature effects that built-up and through-fastened roofs commonly experience. Thermal spacer blocks are often placed between the panels and purlins in order to ensure a consistent thermal barrier. Due to the superiority of the standing-seam roof, most manufacturers are willing to offer considerably longer guarantees than those offered on lap-seam roofs.

Because of the ability of standing-seam roofs to move on sliding clips, they possess only minimal diaphragm strength and stiffness. The designer should assume that the standing-seam roof has no diaphragm capacity and, in the case of steel joists, should specify that sufficient bridging be provided to laterally brace the joists under design loads.

The reader is referred to *A Design Guide for Standing Seam Roof Panels*, AISI CF00-1 (AISI, 2000), for further information on standing-seam roofs.

3.3 INSULATION AND ROOFING

Due to energy concerns, the use of additional and/or improved roof insulation has become common. Coordination with the mechanical requirements of the building is necessary. Generally, the use of additional insulation is warranted, but there are at least two practical problems that occur as a result. Less heat loss through the roof results in greater snow and ice build-up and larger snow loads. As a consequence of the same effect, the roofing is subjected to colder temperatures and, for some systems (built-up roofs), thermal movement, which may result in cracking of the roofing membrane.

3.4 EXPANSION JOINTS

Although industrial buildings are often constructed of flexible materials, roof and structural expansion joints are required when horizontal dimensions are large. It is not possible to state exact requirements relative to distances between expansion joints because of the many variables involved, such as ambient temperature during construction and the expected temperature range during the life of the structure. An excellent reference on the topic of thermal expansion in buildings and location of expansion joints is the Federal Construction Council's *Expansion Joints in Buildings* (Federal Construction Council, 1974). The report presents the figure shown here as Figure 3-1 as a guide for spacing structural expansion joints in beam and column frame buildings based on design temperature change. The report includes data for numerous cities and gives modifying factors that are applied to the allowable building length as appropriate.

The report indicates that the curve is directly applicable to buildings of beam-and-column construction hinged at the base with heated interiors. When other conditions prevail, the following rules are applicable:

1. If the building will be heated only and will have hinged-column bases, use the allowable length as specified.
2. If the building will be air conditioned as well as heated, increase the allowable length by 15% (if the environmental control system will run continuously).
3. If the building will be unheated, decrease the allowable length by 33%.
4. If the building will have fixed-column bases, decrease the allowable length by 15%.
5. If the building will have substantially greater stiffness against lateral displacement in one direction, decrease the allowable length by 25%.

When more than one of these design conditions prevails in a building, the percentile factor to be applied should be the algebraic sum of the adjustment factors of all the various applicable conditions.

Regarding the type of structural expansion joint, most engineers agree that the best method is to use a line of double columns to provide a complete separation at the joints. When joints other than the double column type are employed, low-sliding elements, such as shown in Figures 3-2 and 3-3, are generally used. Slip connections may induce some level of inherent restraint to movement due to binding or debris build-up.

Very often buildings may be required to have fire walls in specific locations. Fire walls may be required to extend

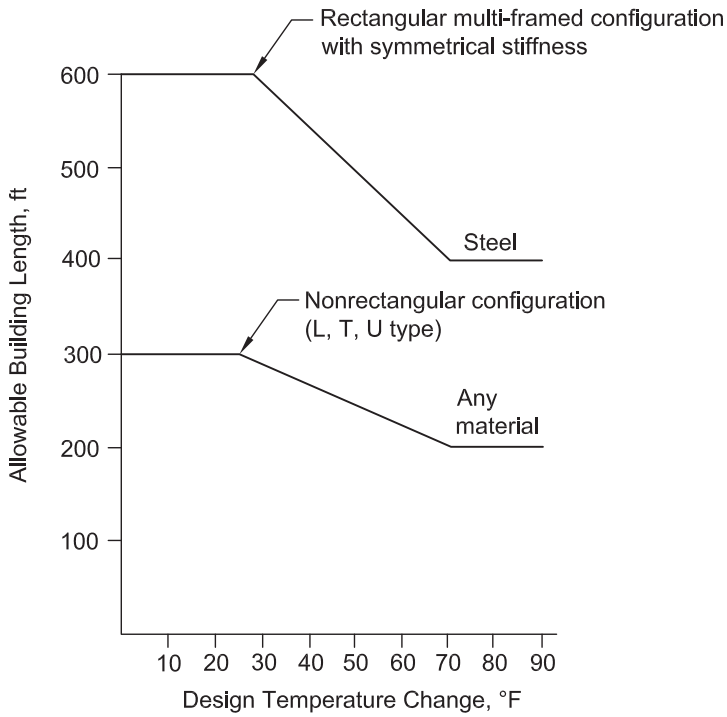

Fig. 3-1. Expansion joint spacing graph (Federal Construction Council, 1974).

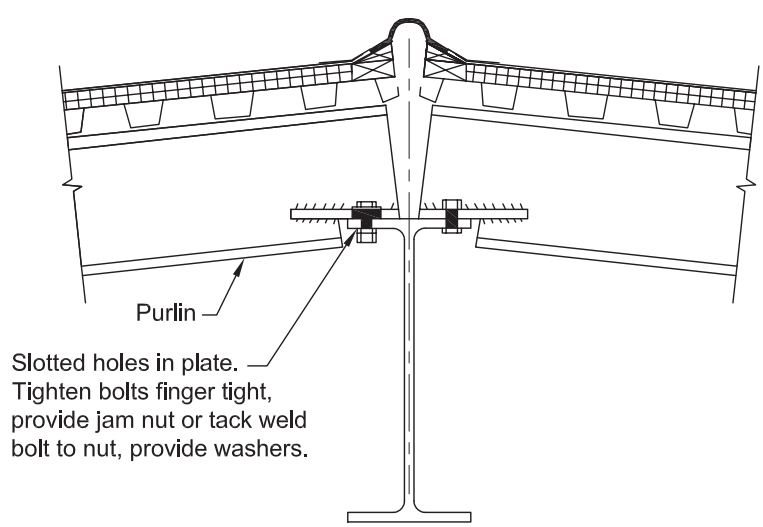

Fig. 3-2. Beam expansion joint.

above the roof or they may be allowed to terminate at the underside of the roof. Such fire walls become locations for expansion joints. In such cases the detailing of joints can be difficult. Figures 3-2 and 3-3 depict typical details to permit limited expansion.

Expansion joints in the structure should always be carried through the roofing. Additionally, depending on membrane type, other joints called area dividers are necessary in the roof membrane. These joints are membrane relief joints only and do not penetrate the roof deck. Area divider joints are generally placed at intervals of 150 to 250 ft for adhered membranes, at somewhat greater intervals for ballasted membranes, and 100 to 200 ft in the case of steel roofs. Spacing of joints should be verified with manufacturer's requirements. The range of movement between joints is limited by the flexibility and movement potential of the anchorage scheme and, in the case of standing-seam roofs, by the clip design. Manufacturer's recommendations should be consulted and followed. Area dividers can also be used to divide complex roofs into simple squares and rectangles.

3.5 ROOF PITCH, DRAINAGE, AND PONDING

Prior to determining a framing scheme and the direction of primary and secondary framing members, it is important to decide how roof drainage is to be accomplished. If the structure is heated, interior roof drains may be justified. For unheated spaces, exterior drains and gutters may provide the solution.

For some building sites, it may not be necessary to have gutters and downspouts to control storm water, but their use is generally recommended or required by the owner. Significant operational and hazardous problems can occur where

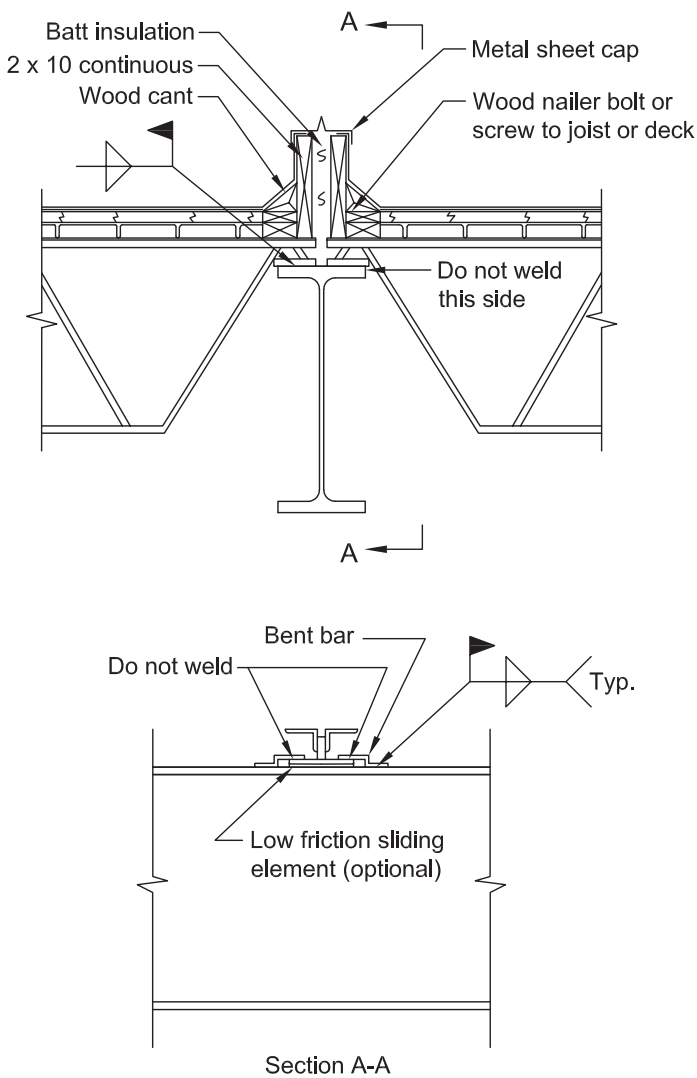

Fig. 3-3. Joist expansion joint.

water is discharged at the eaves or scuppers in cold climates, causing icing of ground surfaces and hanging of ice from the roof edge. This is particularly a problem at overhead door locations and may occur with or without gutters. Protection from falling ice must be provided at all building service entries.

Performance of roofs with positive drainage is generally good. Due to problems that result from poor drainage, such as ponding, roofing deterioration, and leaking, the IBC requires a roof slope of at least ¼ in. per ft.

Ponding, which is often not understood or is overlooked, is a phenomenon that may lead to severe distress or partial or general collapse. As it applies to roof design, ponding has two meanings. To the roofing industry, ponding describes the condition in which water accumulated in low spots has not dissipated within 24 hours of the last rain storm. Ponding of this nature is addressed in roof design by positive roof drainage and control of the deflections of roof framing members. As a structural engineering issue, ponding is a load/deflection situation, in which there is incremental accumulation of rain water in the deflecting structure. The purpose of a ponding check is to ensure that equilibrium is reached between the incremental loading and the incremental deflection. This convergence must occur at a level of stress that is within the available value.

AISC *Specification for Structural Steel Buildings*, ANSI/AISC 360-16 (AISC, 2016b), hereafter referred to as the AISC *Specification*, gives procedures in Appendix 2 for addressing the problem of ponding where roof slopes and drains may be inadequate. The simplified design for ponding method is expressed in AISC *Specification* Equations A-2-1 through A-2-4. These relations control the stiffness of the primary- and secondary-framing members and the deck. This method, however, can produce unnecessarily conservative results.

A more exact method is provided in AISC *Specification* Appendix 2, Section 2.2, Improved Design for Ponding. The key to the use of the improved method is the calculation of stress in the framing members due to loads present at the initiation of ponding. The difference between $0.8F_y$ and the initial stress is used to establish the required stiffness of the roof framing members. The initial stress ("at the initiation of ponding") is determined from the loads present at that time. These should include all or most of the dead load and may include some portion of snow, rain, or live load.

Steel Joist Institute (SJI) *Structural Design of Steel Joist Roofs to Resist Ponding Loads*, Technical Digest #3 (SJI, 2007), provides additional information on ponding.

The amount of accumulated water used in the design for ponding is also subject to judgment. AISC *Specification* Section B3.10, Design for Ponding, states that, "The roof system shall be investigated through structural analysis to ensure strength and stability under ponding conditions, unless the roof surface is configured to prevent the accumulation of water." The possibility of plugged drains means that the load at the initiation of ponding must include the depth of impounded water at the elevation of overflow drains, roof edges, or scuppers. It is clear from reading the AISC *Specification* that it is not necessary to include the weight of water that would accumulate after the "initiation of ponding." Where snow load is used by the code, the designer may be required to add 5 psf to the roof load to account for the effect of rain on snow. Also, consideration must be given to areas of drifted snow. It is clear that judgment must be used in the determination of loading at the initiation of ponding. It is equally clear that 100% of the roof design load would rarely be appropriate for the loading at the initiation of ponding.

A continuously framed or cantilever system may be more critical than a simple-span system. With continuous framing, rotations at points of support due to nonuniformly distributed roof loads will initiate upward and downward deflections in alternate spans. The water in the uplifted bays drains into the adjacent downward deflected bays, compounding the effect and causing the downward deflected bays to approach the deflected shape of simple spans. For these systems, one approach to ponding analysis could be based on simple beam stiffness, although a more refined analysis could be used. The designer should also consult with the plumbing designer to establish whether or not a controlled flow (water retention) drain scheme is being used. Such an approach allows the selection of smaller pipes because the water is impounded on the roof and slowly drained away.

A situation that is not addressed by building code drainage design is shown in Figure 3-4. The author has investigated several roof ponding collapses where the accumulation of water is greater than would be predicted by drainage analysis for the area shown in Figure 3-4. As the water drains toward the eave, it finds the least resistance to flow along the parapet to the aperture of the roof. Designers are encouraged to pay close attention to these types of situations and to provide a conservative design for ponding in the aperture area.

Besides rainwater accumulation, the designer should give consideration to excessive build-up of material on roof surfaces from industrial operations, such as fly ash and other airborne material. Enclosed valleys, parallel high- and low-aisle roofs, and normal wind flows can cause unexpected build-ups and possibly roof overload.

3.6 JOISTS AND PURLINS

A decision must be made whether to span the long direction of bays with the main beams, trusses, or joist girders that support short-span joists or purlins or to span the short direction of bays with main framing members that support longer span joists or purlins. Experience in this regard is that spanning the shorter bay dimension with primary members will

provide the most economical system. However, this decision may not be based solely on economics but rather on such factors as ease of erection, future expansion, direction of crane runs, or location of overhead doors.

On the use of steel joists or purlins, experience again shows that each case must be studied. SJI *Standard Specifications, Load Tables, and Weight Tables for Steel Joists and Joist Girders* (SJI, 2015b), hereafter referred to as the SJI *Specification*, are based upon distributed loads only. Modifications for concentrated loads should be made in accordance with the SJI *Code of Standard Practice for Steel Joists and Joist Girders* (SJI, 2015a). Significant concentrated loads should be supported by hot-rolled framing members. However, in the absence of large concentrated loads, joist framing can generally be more economical than hot-rolled framing.

Cold-formed C- and Z-shaped purlins provide an alternative to rolled wide-flange sections. The provisions contained in the *North American Specification for the Design of Cold-Formed Steel Structural Members*, AISI S100-16 (AISI, 2016a), hereafter referred to as the AISI *Specification*, should be used for the design of cold-formed steel purlins. The AISI *Design Guide for Cold-Formed Steel Purlin Roof Framing Systems* (AISI, 2009) also provides design examples for the design of cold-formed purlins. Additional economy can be achieved with C- and Z-shaped sections because they can be designed and constructed as continuous members. However, progressive failure should be considered if there is a possibility for a loss in continuity after installation.

Other considerations in the use of C- and Z-shaped sections include:

1. Z-shaped sections ship economically due to the fact that they can be "nested."
2. Z-shaped sections can be loaded through the shear center; C-shaped sections cannot.
3. On roofs with appropriate slope, a Z-shaped section will have one principal vertical axis, while a C-shaped section provides this condition only for flat roofs.
4. Many erectors indicate that lap-bolted connections for C- or Z-shaped sections are more expensive than the simple, welded-down connections for joist ends.
5. At approximately a 30-ft span length, C- and Z-shaped sections may cost about the same as a joist for the same load per foot. For shorter spans, C- and Z-shaped sections are normally less expensive than joists.

3.7 ROOF PENETRATIONS AND EQUIPMENT

When headers are used to support rooftop equipment, the maximum size of an opening is one that can fit between two beams or joists without disrupting the specified beam spacing for a given framing situation. Openings often coincide with additional concentrated loads, such as at rooftop units or other types of equipment. Curbs can be set atop the steel roof deck and may be screwed directly to the deck. The deck opening is cut to match the inside dimensions of the curb. Headers or a small frame should be provided to carry the curb load to the joists. Wood or steel blocking is often placed between the deck flutes to prevent the deck from crushing between the curb and the headers. A typical header detail is shown in Figure 3-5.

When joist framing is used, it is always desirable to locate the concentrated loads on panel points and thus eliminate top-chord bending. Small isolated openings for vents can usually be shifted to align with panel points. This, however, requires that the opening frame is made to conform to the panel-point spacing. For repetitive openings with a consistent pattern, special joists designed for uniform and concentrated loads can be used. The frames are usually constructed from hot-rolled angles that have been welded into the required shapes. The vertical leg of the header angle is coped or a short piece of angle is welded to the end of the header to create a seat.

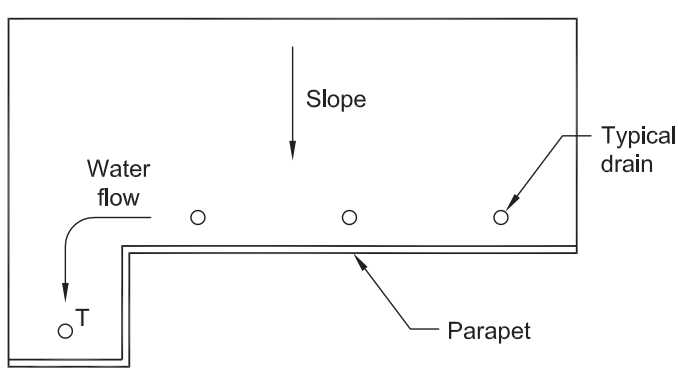

Fig. 3-4. Aperture drainage.

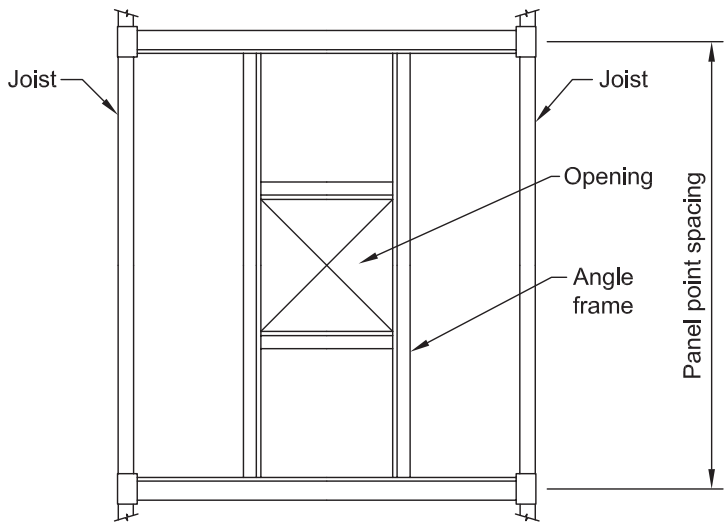

Fig. 3-5. Header conforming to panel point spacing.

Chapter 4
Roof Trusses

Primary roof framing for a conventionally designed industrial building generally consists of wide-flange beams, steel joist girders, or fabricated trusses. For relatively short spans of 30 to 40 ft, steel beams provide an economical solution, particularly if a multitude of hanging loads is present. For spans greater than 30 ft, steel joist girders are often used to support roof loads. Fabricated steel roof trusses are often used for spans greater than 80 ft. In recent years, little has been written about the design of steel roof trusses. Most textbooks addressing the design of trusses were written when riveted connections were used. Today, welded trusses and field-bolted trusses are used exclusively. Presented in the following paragraphs are concepts and principles that apply to the design of roof trusses.

4.1 GENERAL DESIGN AND ECONOMIC CONSIDERATIONS

No absolute statements can be made about what truss configuration will provide the most economical solution for a particular situation; however, the following statements can be made regarding truss design.

1. Span-to-depth ratios of 15 to 20 generally prove to be economical; however, shipping depth limitations should be considered so that shop fabrication can be maximized. The maximum depth for shipping is conservatively 14 ft. Greater depths will require the web members to be field bolted or field welded, which may increase erection costs.
2. The length between splice points is also limited by shipping lengths. The maximum shippable length varies according to the destination of the trusses, but lengths of 80 ft are generally shippable, and 100 ft is often possible. Because maximum available mill length is approximately 70 ft, the distance between splice points is typically set at a maximum of 70 ft. Greater distances between splice points will generally require truss chords to be shop spliced.
3. In general, the rule "deeper is cheaper" is true; however, the costs of additional lateral bracing for more flexible truss chords must be carefully examined relative to the cost of larger chords that may require less lateral bracing. The lateral bracing requirements for the top and bottom chords should be considered interactively while selecting chord sizes and types. Particular attention should be paid to loads that produce compression in the bottom chord. In this condition, additional chord bracing will most likely be necessary.
4. If possible, truss depths should be selected so that tees can be used for the chords rather than wide-flange shapes. Tees can eliminate or reduce the need for gusset plates.
5. Higher strength steels (F_y > 50 ksi) usually result in more efficient truss members.
6. Web arrangements are illustrated in Figures 4-1 and 4-2, which generally provide economical web systems.
7. Only a few web angle sizes should be selected, and efficient long-leg angles should be utilized for greater resistance to buckling. Differences in angle sizes should be recognizable. For instance, avoid using an L4×3×¼ and an L4×3×5⁄16 in the same truss.
8. HSS or pipe sections may prove to be more effective web members at some web locations; however, they may increase fabrication cost due to increased fit-up time and welding.
9. Designs using the LRFD load combinations from ASCE/SEI 7-16 will often lead to truss savings when heavy, long-span trusses are required. This is due to the higher DL-to-LL ratios for these trusses.
10. The weight of gusset plates, shim plates, and bolts can be significant in large trusses. This weight must be considered in the design because it often approaches 10 to 15% of the truss weight.
11. In computer analyses of trusses where rigid joints are assumed, secondary bending moments will show up in the analysis. The reader is referred to Nair (1988a) wherein it is suggested that as long as these secondary stresses do not exceed 4,000 psi, they may be neglected. Secondary stresses should not be neglected if the beneficial effects of continuity are being considered in the design process—for example, effective length determination. The designer must be consistent. That is, if the joints are considered as pins for the determination of forces, then they should also be considered as pins in the design process. The assumption of rigid joints in some cases may provide unconservative estimates on the deflection of the truss.
12. Repetition is beneficial and economical. Use as few different truss depths as possible. It is cheaper to vary the chord size rather than the truss depth.
13. Wide-flange chords with gussets may be necessary when significant bending moments exist in the chords (i.e., subsystems not supported at webs or large distances between webs).

14. Design and detailing of long-span joists and joist girders should be in accordance with the SJI *Specification*.

4.2 CONNECTION CONSIDERATIONS

The following are some issues to consider relative to the various types of connections involved in truss design.

1. Tee chords are generally economical because they can eliminate gusset plates. The designer should examine the connection requirements to determine if the tee stem is, in fact, long enough to eliminate gusset requirements. The use of a deeper tee stem is generally more economical than adding numerous gusset plates even if this means an addition in overall weight. Adding tee stems will usually require complete-joint-penetration (CJP) welds between the gusset plate and the tee stem, which may increase fabrication and inspection costs.
2. Block shear requirements and the effective area in compression should be carefully checked in tee stems and gussets. Shear rupture of chord members at panel points should also be investigated because this can often control wide-flange chords.
3. Intermediate connectors such as stitch fasteners or fillers may be required for double-web members.
4. If wide-flange chords are used with wide-flange web members, it is generally more economical to orient the chords with their webs horizontal. Gusset plates for the web members can then be either bolted or welded to the chord flanges. To eliminate the cost of fabricating large shim or filler plates for the diagonals, the use of comparable depth wide-flange diagonals should be considered.
5. When trusses require field-bolted joints, the use of slip-critical bolts in conjunction with oversize holes will allow for erection alignment. Also, if standard holes are used with slip-critical bolts and field fit-up problems occur, holes can be reamed without significantly reducing the allowable bolt shears.
6. For the end connection of trusses, top-chord seat-type connections should also be considered. Seat connections allow more flexibility in correcting column-truss alignment during erection. Seats also provide for efficient erection and are more stable during erection than bottom bearing trusses. When seats are used, a simple bottom-chord connection is recommended to prevent the truss from rolling during erection.
7. For symmetrical trusses, a center splice should be used to simplify fabrication, even though forces may be larger than for an offset splice.
8. End plates can provide efficient compression splices.
9. It is often less expensive to locate the work point of the end diagonal at the face of the supporting member rather than designing the connection for the eccentricity between the column centerline and the face of the column. When this is done, the column should be designed for the eccentricity of load.

4.3 TRUSS BRACING

Stability bracing is required at discrete locations where the designer requires bracing for the design of the members in a truss. These locations are generally at panel points. Bracing requirements are provided in AISC *Specification* Appendix 6. To function properly, braces must have sufficient strength and stiffness. As a general rule, the stiffness requirement will control the design of the bracing unless the stiffness is derived from axial stresses only. Braces that displace due to axial loads are very stiff, thus strength requirements generally control.

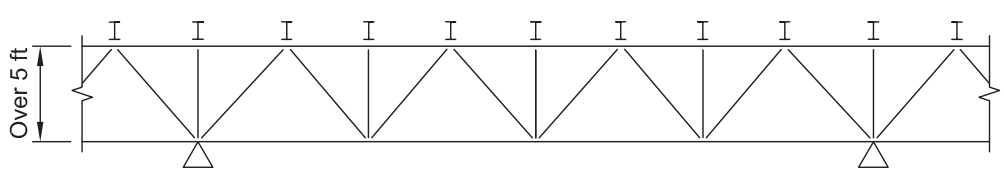

Fig. 4-1. Economical truss web arrangement.

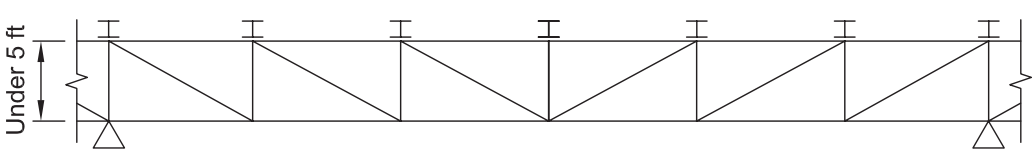

Fig. 4-2. Economical truss web arrangement.

The Association for Iron and Steel Technology (AIST) *Guide for the Design and Construction of Mill Buildings* (AIST, 2003), hereafter referred to as AIST TR-13, requires a 0.025*P* force for bracing. AIST TR-13 is silent on stiffness requirements.

Designers must determine the number of "out-of-straight" trusses that should be considered for a given bracing situation. No definitive rules exist; however, the Australian Code (BCA, 2015) indicates that no more than seven out-of-straight members need to be considered. For columns, Chen and Tong (1994) recommend that $\sqrt{n}$ columns be considered in the out-of-straight condition, where n is the total number of columns in a story. This suggests that $\sqrt{n}$ trusses could be considered in the bracing design. The number to be considered is rounded up to a whole number. Thus, if 10 trusses were to be braced, bracing forces would be based on four trusses. Common practice is to provide horizontal bracing every five to six bays to transfer bracing forces to the main force-resisting system.

In addition to stability bracing, top- and bottom-chord bracing may also be required to transfer lateral loads to the main lateral-stability system. The force requirements for the lateral loads must be added to the stability force requirements. Lateral load bracing is placed in either the plane of the top chord or the plane of the bottom chord, but generally not in both planes.

Requirements for truss bottom-chord bracing are also discussed in "The Importance of Tension Chord Bracing" (Fisher, 1983).

4.3.1 Roof Truss Stability Bracing Example

For the truss system shown in Figure 4-3, determine the brace forces in the web members (tension-only X-bracing) of the horizontal truss. Use the requirements from AISC *Specification* Appendix 6. For illustration purposes the

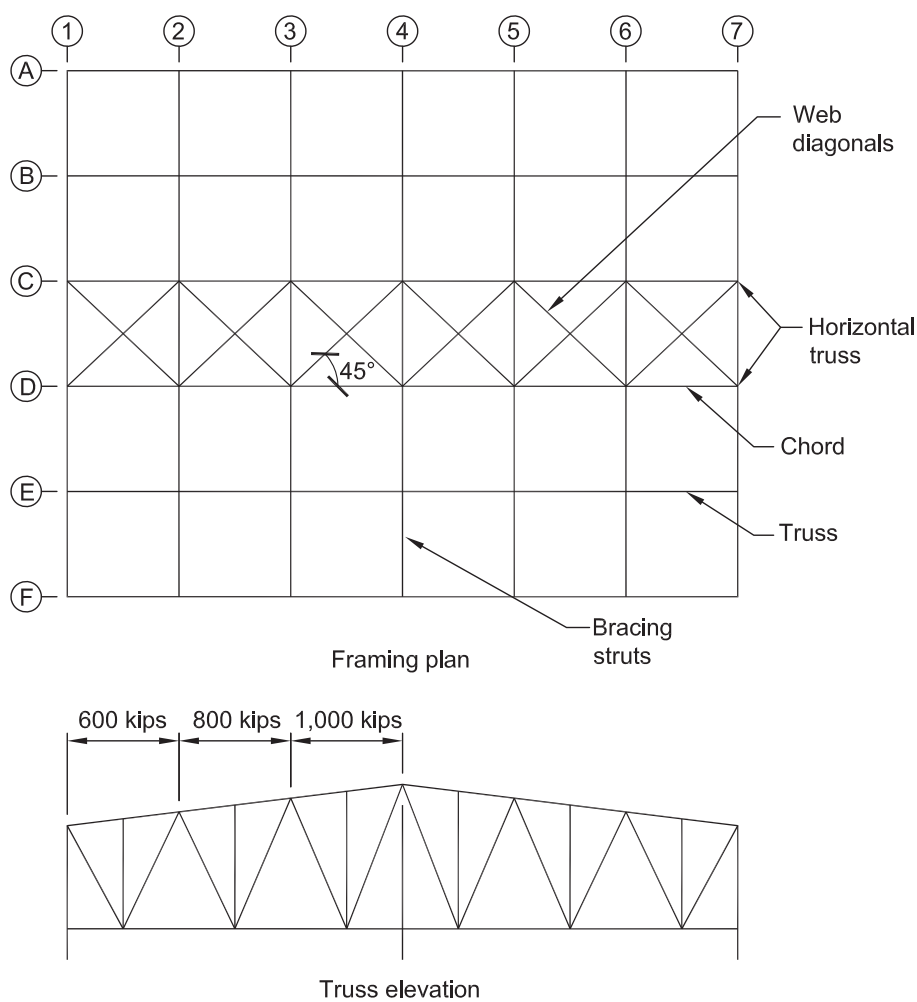

Fig. 4-3. Horizontal bracing system.

Table 4-1. Summary of Stability Bracing Web Member Forces		
Web Member Panel Shear (Panel Bracing)		
Members	**Panel Shear = 0.005 × Average Chord Force, kips**	**Brace Force = $\frac{\text{Panel Shear}}{\cos 45°}$, kips**
C1-D2, D1-C2	$0.005(6\text{ trusses})\left(\frac{600\text{ kips}+800\text{ kips}}{2}\right)=21.0$	29.7
C2-D3, D2-C3	$0.005(6\text{ trusses})\left(\frac{800\text{ kips}+1{,}000\text{ kips}}{2}\right)=27.0$	38.2
C3-D4, D3-C4	$0.005(6\text{ trusses})(1{,}000\text{ kips})=30.0$	42.4
Bracing Strut Forces (Point Bracing)		
Grid Lines	**Strut Force = 0.01 × Average Chord Force, kips**	**Total Strut Force, kips**
1 & 7	$0.01(600\text{ kips})=6.00$	$(3)(6.00)=18.0$
2 & 6	$0.01(600\text{ kips}+800\text{ kips})=7.00$	$(3)(7.00)=21.0$
3 & 5	$0.01(800\text{ kips}+1{,}000\text{ kips})=9.00$	$(3)(9.00)=27.0$
4	$0.01\left(\frac{1{,}000\text{ kips}+1{,}000\text{ kips}}{2}\right)=10.0$	$(3)(10.0)=30.0$
Final Top Chord Forces, kips		
Grid Line		**Top Chord Force, kips**
1 to 2		$600+21.0=621$
2 to 3		$800+27.0=827$
3 to 4		$1{,}000+30.0=1{,}030$

forces shown in Figure 4-3 can be considered LRFD or ASD forces. The compression forces in the top chord in each truss are shown in the truss elevation. The horizontal truss braces six trusses, all with the same chord compressive forces. The grid lines form a square pattern. The solution does not reduce the number of trusses to be braced based on the Chen and Tong (1994) paper. The axially loaded web members in this example have adequate stiffness to satisfy AISC *Specification* Appendix 6 requirements.

The horizontal truss is considered a panel bracing system; therefore, the required shear strength of the braces for the web members is based on AISC *Specification* Equation A-6-1:

$$V_{br} = 0.005P_r \qquad (\textit{Spec.}\text{ Eq. A-6-1})$$

where

P_r = required axial strength of the column within the panel under consideration using LRFD or ASD load combinations, kips

The strut forces are a function of the lateral stiffness of the horizontal truss. If the truss has infinite stiffness, then the strut forces would act as point bracing. See AISC *Specification* Commentary Figure C-A-6.1(a). If the horizontal truss is not rigid, the strut forces would be smaller in magnitude than those using the point bracing equation. Conservatively use the point brace force equation from the AISC *Specification*. The AISC *Specification* required strength for a point brace is:

$$P_{br} = 0.01P_r \qquad (\textit{Spec.}\text{ Eq. A-6-3})$$

The forces in the braces do not accumulate along the length of the truss, i.e., from grid line to grid line (Nair, 1988b). Any unbalanced shear between panels is resisted by lateral shears in the top chord of the horizontal truss. The forces in the bracing struts accumulate based on the number of trusses being braced by the horizontal truss. A maximum of three struts accumulate along each grid line to deliver the brace forces to the horizontal truss. The panel shear forces are additive to the horizontal truss chord axial forces. The bracing requirements are summarized in Table 4-1.

4.4 ERECTION BRACING

The engineer of record is not responsible for the design of erection bracing unless specific contract arrangements incorporate this responsibility into the work. However, designers must be familiar with the Occupational Safety and Health Administration (OSHA) erection requirements, *Safety and Health Standards for the Construction Industry, 29 CFR 1926 Part R Safety Standards for Steel Structures* (OSHA, 2010b), hereafter referred to as OSHA *Subpart R*.

Even though the truss designer is not responsible for the erection bracing, the designer should consider sequence and bracing requirements in the design of large trusses in order to provide the most cost-effective system. Large trusses require significant erection bracing not only to resist wind and construction loads, but also to provide stability until all of the gravity load bracing is installed. Significant cost savings can be achieved if the required erection bracing is incorporated into the permanent bracing system.

Erection is generally accomplished by first connecting two trusses together with strut braces and any additional erection braces to form a stable box system. Additional trusses are held in place by the crane or cranes until they can be tied off with strut braces to the already-erected stable system. Providing the necessary components to facilitate this type of erection sequence is essential for a cost-effective project. Additional considerations are as follows:

1. Columns are usually erected first with the lateral bracing system (see Figure 4-4). If top-chord seats are used, the trusses can be quickly positioned on top of the columns and braced to one another. Bottom-chord bearing trusses require that additional stability bracing be installed at the truss ends while the cranes hold the trusses in place. This can slow down the erection sequence.
2. Because many industrial buildings require clear spans, systems are often designed as rigid frames. By designing rigid frames, erection is facilitated because the side wall columns are stabilized in the plane of the trusses once the trusses are adequately anchored to the columns. This scheme may require larger columns than a braced-frame system; however, economy can generally be recovered due to a savings in bracing and erection time.
3. Wide-flange beams, HSS, or pipe sections should be used to laterally brace large trusses at key locations during erection because of greater stiffness. Steel joists can be used; however, two notes of caution are advised.
   a. Erection bracing strut forces must be provided to the joist manufacturer, and it must be made clear whether joist bridging and roof deck will be in place when the erection forces are present. Large-angle top chords in joists may be required to control the joist slenderness ratio so that it does not buckle while serving as the erection strut.
   b. Joists are often not fabricated to exact lengths, and long-slotted holes are generally provided in joist

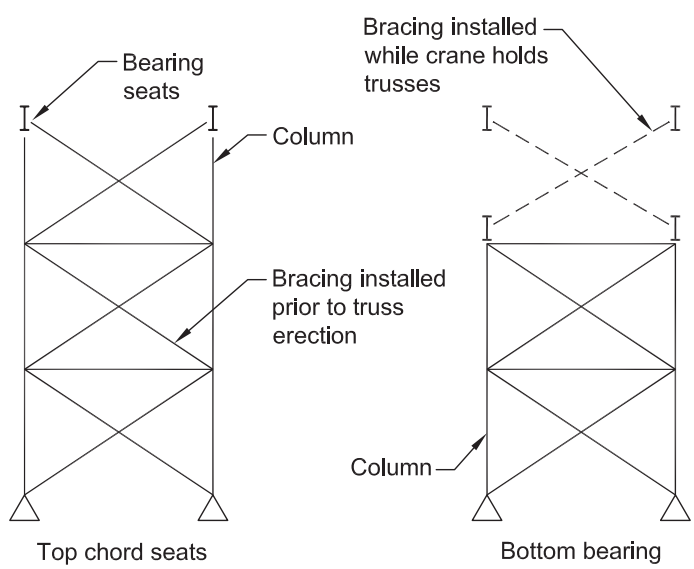

Fig. 4-4. Wall bracing erection sequence.

seats. Slotted holes for bolted bracing members should be avoided because of possible slippage. Special coordination with the joist manufacturer is required to eliminate the slots and to provide a suitable joist for bracing. In addition, the joists must be at the job site when the erector wishes to erect the trusses.

4. Wind forces on the trusses during erection can be considerable. Refer to ASCE/SEI 7-16 for detailed treatment of wind forces on buildings during construction. The AISC *Code of Standard Practice for Steel Buildings and Bridges* (AISC, 2016a), hereafter referred to as the AISC *Code of Standard Practice*, Section 7.10.3, states that "These temporary supports shall be sufficient to secure the bare structural steel framing or any portion thereof against loads that are likely to be encountered during erection, including those due to wind and those that result from erection operations." The projected area of all of the truss and other roof framing members can be significant, and in some cases the wind forces on the unsided structure are actually larger than those after the structure is enclosed.

5. A sway frame is typically required to plumb the trusses during erection. These sway frames should occur every fourth or fifth bay. An elevation view of such a truss is shown in Figure 4-5. These frames can be incorporated into the bottom-chord bracing system. Sway frames are also often used to transfer forces from one chord level to another as discussed earlier. In these cases, the sway frames must not only be designed for stability forces, but also the required load transfer forces.

4.5 OTHER CONSIDERATIONS

Several other issues to consider when designing roof trusses are listed in the following.

1. *Camber*: Large clear-span trusses are typically cambered to accommodate dead load deflections. This is accomplished by the fabricator by either adjusting the length of the web members in the truss and keeping the top-chord segments straight or by curving the top chord. Tees can generally be easily curved during assembly whereas wide-flange sections may require cambering prior to assembly. If significant top-chord pitch is provided and if the bottom chord is pitched, camber may not be required. The engineer of record is responsible for providing the fabricator with the anticipated dead load deflection and special cambering requirements. The designer must carefully consider the truss deflection and camber adjacent to walls or other portions of the structure where stiffness changes cause variations in deflection. This is particularly true at building end walls, where differential deflections may damage continuous purlins or connections.
2. *Temperature changes*: Connection details that can accommodate temperature changes are typically necessary. Long-span trusses that are fabricated at one temperature and erected at a significantly different temperature can grow or shrink significantly.
3. *Diaphragm action*: Roof deck diaphragm strength and stiffness are commonly used for strength and stability bracing for joists. The diaphragm capabilities must be carefully evaluated if it is to be used for bracing of large clear-span trusses.

For a more comprehensive treatment of erection bracing design, the reader is referred to AISC Design Guide 3.

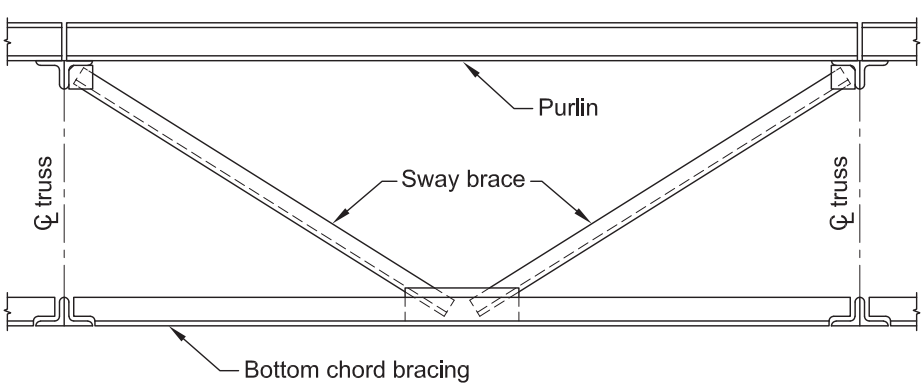

Fig. 4-5. Sway frame.

Chapter 5
Wall Systems

The wall system in an industrial building can be chosen for a variety of different criteria, and the cost of the wall can vary by as much as a factor of three. Wall systems include:

1. Field-assembled metal panels
2. Factory-assembled metal panels
3. Precast concrete panels
4. Masonry walls (partial or full height)

A particular wall system may be selected over others for one or more specific reasons, including:

1. Cost
2. Appearance
3. Ease of erection
4. Speed of erection
5. Insulating properties
6. Fire considerations
7. Acoustical considerations
8. Ease of future expansion
9. Durability of finish
10. Maintenance/cleaning considerations

Some of these factors will be discussed in the following sections on specific systems. Other factors are not discussed and require evaluation on a case-by-case basis.

5.1 FIELD-ASSEMBLED PANELS

Field-assembled panels consist of an outer skin element, insulation, and in some cases, an inner liner panel. The panels vary in material thickness and are typically galvanized, galvanized prime painted suitable for field painting, or prefinished galvanized. Corrugated aluminum liners are also used. When aluminum materials are used, their compatibility with steel supports should be verified with the manufacturer because aluminum may cause corrosion of steel. When an inner liner is used, some form of hat section interior subgirts are typically provided for stiffness. The insulation is typically fiberglass or foam. If the inner liner sheet is used as the vapor barrier, all joints and edges should be sealed.

Specific advantages of field-assembled wall panels include:

1. Rapid erection of panels.
2. Good cost competition, with a large number of manufacturers and contractors being capable of erecting panels.
3. Quick and easy panel replacement in the event of panel damage.
4. Openings for doors and windows that can be created quickly and easily.
5. The panels are lightweight so that heavy equipment is not required for erection. Large foundations and heavy spandrels are not required.
6. Acoustic surface treatment that can be added easily to interior wall panels at reasonable cost.

A disadvantage of field-assembled panels in high-humidity environments can be the formation of frost or condensation on the inner liner when insulation is placed only between the sub-girt lines. The metal-to-metal contact (outside sheet-sub-girt-inside sheet) should be broken to reduce thermal bridging. A detail that has been used successfully is shown in Figure 5-1. Another option is to provide rigid insulation between the girt and liner on one side. In any event, the wall should be evaluated for thermal transmittance in accordance with *Energy Efficient Design of New Buildings Except Low-Rise Residential Buildings*, ASHRAE 90.1 (ASHRAE, 2013).

5.2 FACTORY-ASSEMBLED PANELS

Factory-assembled panels typically consist of interior liner panels, exterior metal panels, and insulation. Panels providing various insulating values are available from several manufacturers. These systems are generally proprietary and must be designed according to manufacturer's recommendations.

The particular advantages of these factory-assembled panels are:

1. Panels are lightweight and do not require heavy erection cranes, large foundations, or heavy spandrels.
2. Panels can have a hard surface interior liner.
3. Panel sidelap fasteners are typically concealed, producing a "clean" appearance.
4. Documented panel performance characteristics determined by test or experience may be available from manufacturers.

Disadvantages of factory-assembled panels include:

1. Once a choice of panel has been made, future expansions may effectively require use of the same panel to match color and profile, thus competition is essentially eliminated.
2. Erection procedures usually require starting in one corner of a structure and proceeding to the next corner. Due to the interlocking nature of the panels it may be difficult to add openings in the wall.
3. Close attention to coordination of details and tolerances with collateral materials is required.
4. Thermal changes in panel shape may be more apparent.

5.3 PRECAST WALL PANELS

Precast wall panels for industrial buildings could utilize one or more of a variety of panel types including:

1. Hollow core slabs
2. Double-tee sections
3. Site cast tilt-up panels
4. Factory-cast panels

Panels can be either load bearing or nonload bearing and can be obtained in a wide variety of finishes, textures, and colors. Also, panels may be of sandwich construction and contain rigid insulation between two layers of concrete. Such insulated panels can be composite or noncomposite. Composite panels typically have a positive concrete connection between inner and outer concrete layers. These panels are structurally stiff and are good from an erection point of view, but the positive connection between inner and outer layers may lead to exterior surface cracking when the panels are subjected to a temperature differential. The direct connection can also provide a path for thermal bridging, which may be a problem in high-humidity situations.

True sandwich panels connect inner and outer concrete layers with flexible metal ties. Insulation is exposed at all panel edges. These panels are more difficult to handle and erect but typically perform well.

Erecting precast wall panels may be problematic. Lifting lugs cast into the top of the panels are intended for vertical lifting. When lifting from a horizontal shipping or storage condition, the area around the lug may rupture, causing a safety hazard and damaging the panel.

Precast panels have multiple advantages for use in industrial buildings:

1. A hard surface is provided inside and out.

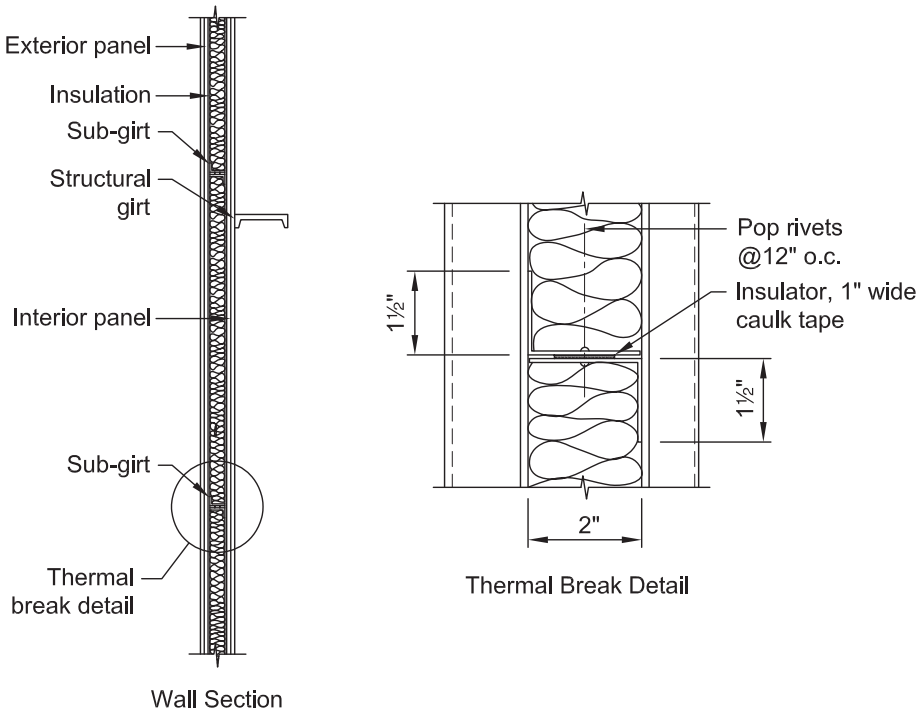

Fig. 5-1. Wall thermal break detail.

2. These panels produce an architecturally "clean" appearance.
3. Panels have inherent fire-resistance characteristics.
4. Intermediate girts are typically not required.
5. Use of load-bearing panels can eliminate exterior framing and reduce cost.
6. They provide an excellent sound barrier.

Disadvantages of precast wall panel systems include:

1. Matching colors of panels in future expansion may be difficult.
2. Composite sandwich panels have "cold spots" with potential condensation problems at panel edges.
3. Adding wall openings can be difficult.
4. Panels have poor sound-absorption characteristics.
5. Foundations and grade beams may be heavier than for other panel systems.
6. Heavier eave struts are required for steel-framed structures than for other systems.
7. Heavy cranes are required for panel erection.
8. If panels are used as load-bearing elements, expansion in the future could present problems.
9. Close attention to tolerances and details to coordinate divergent trades are required.
10. Added dead weight of walls can affect seismic design.

5.4 MASONRY WALLS

Use of masonry walls in industrial buildings is common. Walls can be load bearing or nonload bearing.

Some advantages of the use of masonry wall construction are:

1. A hard surface is provided inside and out.
2. Masonry walls have inherent fire resistance characteristics.
3. Intermediate girts are typically not required.
4. Use of load-bearing walls can eliminate exterior framing and reduce cost.
5. Masonry walls can serve as shear walls to brace columns and resist lateral loads.
6. Walls produce a flat finish, resulting in ease of both maintenance and dust-control considerations.

Disadvantages of masonry include:

1. Masonry has comparatively low material bending resistance. Walls are typically adequate to resist normal wind loads, but interior impact loads can cause damage.
2. Foundations may be heavier than for metal wall-panel construction.
3. Special consideration is required in the use of masonry ties, depending on whether the masonry is erected before or after the steel frame.
4. Buildings in seismic regions may require special reinforcing and added dead weight may increase seismic forces.

5.5 GIRTS

Typical girts for industrial buildings are hot-rolled channel sections or cold-formed steel C- or Z-shaped sections. In some instances, HSS are used to eliminate the need for compression-flange bracing. In recent years, cold-formed sections have gained popularity because of their low cost. As mentioned earlier, cold-formed Z-shaped sections can be easily lapped to achieve continuity, resulting in further weight savings and reduced deflections. Z-shaped sections also ship economically. Additional advantages of cold-formed sections compared with hot-rolled girt shapes are:

1. Metal wall panels can be attached to cold-formed girts quickly and inexpensively using self-drilling fasteners.
2. The use of sag rods is often not required.

Hot-rolled girts are often used when:

1. Corrosive environments dictate the use of thicker sections.
2. Common cold-formed sections do not have sufficient strength for a given span or load condition.
3. Girts will receive substantial abuse from operations.
4. Designers are unfamiliar with the availability and properties of cold-formed sections.
5. In some instances, the overall cost of the erected girt system using hot-rolled sections can be competitive with cold-formed girts depending on the fabricators equipment and the ability of the erector to panelize the wall system for erection.

Both hot-rolled and cold-formed girts subjected to wind-pressure loads are typically considered laterally braced by the wall sheathing. Negative moment regions in continuous cold-formed girt systems are typically considered laterally braced at inflection points and at girt-to-column connections. Continuous systems can be analyzed by assuming either a single prismatic section throughout or a double moment of inertia condition within the lapped section of

the cold-formed girt. Research indicates that an analytical model assuming a single prismatic section is closer to experimentally determined behavior (Robertson and Kurt, 1986).

The use of sag rods is typically required to maintain horizontal alignment of hot-rolled sections. The sag rods are often used to provide lateral restraint against buckling for internal suction loads. When used as bracing, the sag rods must be designed to take tension in either the upward or downward direction. The wall paneling is assumed to provide lateral support for external pressure loads. Lateral stability for the girt based on this assumption is checked using AISC *Specification* Chapter F.

The typical design procedure for hot-rolled girts is as follows:

1. Select the girt size based on external pressure loads, assuming full-flange lateral support.
2. Check the selected girt for sag rod requirements based on deflections and bending stresses about the weak axis of the girt.
3. Check the girt for internal suction loads using AISC *Specification* Chapter F.
4. If the girt is inadequate, increase its size or add sag rods.
5. Check the girt for serviceability requirements.
6. Check the sag rods for their ability to resist the twist of the girt due to suction loads. The sag rod and siding act to provide the torsional brace.

Cold-formed girts should be designed in accordance with the provisions of the AISI *Specification*. Many manufacturers of cold-formed girts will provide design assistance and offer load span tables to aid design.

AISI *Specification* Section I6.2.3, "Compression Members Having One Flange Through-Fastened to Sheathing," provides a means for determining cold-formed girt strength when the compression flange of the girt is attached to sheeting (fully braced). For lapped systems, the sum of the moment capacities of the two lapped girts is normally assumed to resist the negative moment over the support. For full continuity to exist, a lap length on each side of the column support should be equal to at least 1.5 times the girt depth (Robertson and Kurt, 1986). Additional provisions are given in AISI *Specification* Section G for strength considerations relative to shear, web crippling, and combined bending and shear.

AISI *Specification* Section I6.2.1, "Flexural Members Having One Flange Through-Fastened to Deck or Sheathing," provides a simple procedure to design cold-formed girts subjected to suction loading. The basic equation for the determination of the girt strength is:

$$M_n = RS_e F_y \tag{5-1}$$

The values of R are shown in Table 5-1:

Table 5-1. Simple Span C- or Z-Shaped Section *R* Values

Depth Range, in.	Profile	*R*
$d \le 6.5$	C or Z	0.70
$6.5 < d \le 8.5$	C or Z	0.65
$8.5 < d \le 12$	Z	0.50
$8.5 < d \le 12$	C	0.40

where

F_y = specified minimum yield stress, ksi

S_e = elastic section modulus, of the effective section, calculated at the extreme compression or tension fiber at F_y, in.^{3}

Other restrictions relative to insulation, girt geometry, wall panels, and fastening systems between wall panels and girts are discussed in the AISI *Specification.* It should also be mentioned that consideration should be given to tolerance differences between erected columns and girts. The use of slotted holes in girt-to-column attachments is often required.

5.6 WIND COLUMNS

When bay spacing exceeds 30 ft, additional intermediate columns may be required to provide for economical girt design. Two considerations that should be emphasized are:

1. Sufficient bracing of the wind columns to accommodate wind suction loads is needed. This is typically accomplished by bracing the interior flanges of the columns with angles that connect to the girts.
2. Proper attention should be paid to the connection at the top of the columns. For intermediate sidewall columns, secondary roof-framing members must be provided to transfer the wind reaction at the top of the column into the roof-bracing system. Do not rely on "trickle theory" (i.e., a force will find a way to trickle out of the structure.). A positive and calculable system is necessary to provide a traceable load path, such as the diagonals and angle struts shown in Figure 5-2. Bridging systems or bottom-chord extensions on joists can be used to dissipate these forces, but the stresses in the system must be checked. If the wind columns have not been designed for axial load, a slip connection would be necessary at the top of the column.

Small wind reactions can be transferred from the wind columns into the roof diaphragm system as shown in Figure 5-2.

Allowable values for attaching metal deck to structural members can be obtained from screw manufacturers. Allowable stresses in welds to metal deck can be determined from *Structural Welding Code—Steel*, AWS D1.1/D1.1M:2015 (AWS, 2015), or from the AISI *Specification*. In addition to determining the fastener requirements to transfer the concentrated load into the diaphragm, the designer must also check the roof diaphragm for its strength and stiffness. This can be accomplished by using the procedures contained in the SDI *Diaphragm Design Manual*.

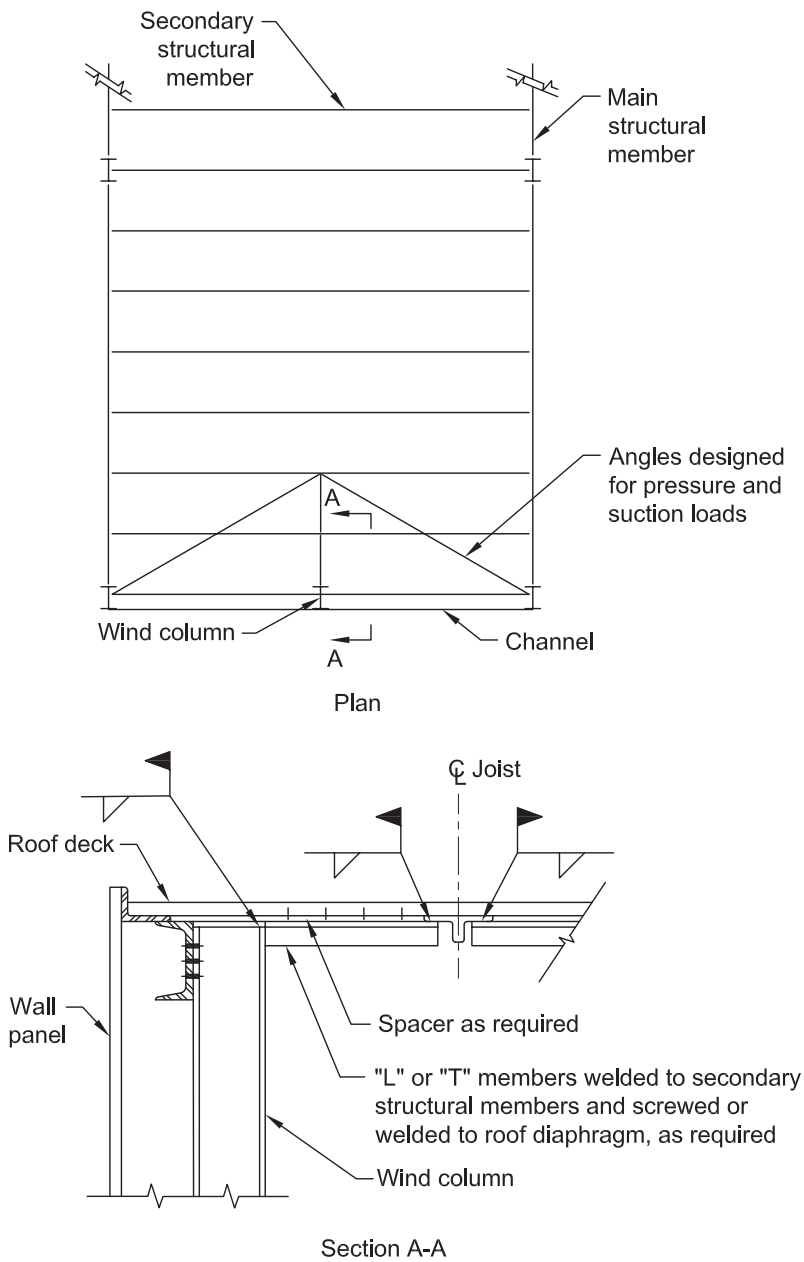

Fig. 5-2. Wind column reaction load transfer.

Chapter 6
Framing Schemes

The selection of the best framing scheme for an industrial building without cranes is dependent on numerous considerations and often depends on the owner's requirements. It may not be possible to give a list of rules by which the best scheme can be assured. If "best" means low initial cost, then the owner may face major expenses in the future for operational expenses or problems with expansion. Extra dollars invested at the outset reduce potential future costs.

The economics of use of long-span versus short-span joists and purlins has been mentioned previously in this Guide. This section expands on the selection of the main framing system. No attempt has been made to evaluate foundation costs. In general, if a deep foundation system (e.g., piles or drilled piers) is required, longer bay spacing is typically more economical.

The consideration of bay sizes must include not only roof and frame factors but also the wall system. The cost of large girts and thick wall panels may cancel the savings anticipated if the roof system alone is considered.

AISC offers a publication that may aid in the design of efficient framing entitled *Detailing for Steel Construction* (AISC, 2009).

6.1 BRACED FRAMES VERSUS RIGID FRAMES

The design of rigid frames is explained in numerous textbooks and professional journals and will not be covered here; however, a few concepts will be presented concerning the selection of a braced-frame versus a rigid-frame structural system. There are several situations for which a rigid frame system is likely to be superior.

1. Braced frames may require bracing in both walls and roof. Bracing frequently interferes with plant operations and future expansion. If either consideration is important, a rigid frame structure may be the answer.
2. The bracing of a roof system can be accomplished through X-bracing or a roof diaphragm. In either case, the roof becomes a large horizontal beam spanning between the walls or bracing that must transmit the lateral loads to the foundations. For large span-to-width ratios (greater than 3:1), the bracing requirements become excessive. A building with dimensions of 100 ft by 300 ft with potential future expansion in the long direction may best be suited for rigid frames to minimize or eliminate bracing that would interfere with future changes.

Experience has shown that there are situations when braced-frame construction may prove to be more economical than either standard metal building systems or special rigid-frame construction if certain sacrifices on flexibility are acceptable.

Use of a metal building system requires a strong interaction between the designer and the metal building manufacturer. Much of the detailing process concerning the design is provided by the manufacturer, and the options open to the buyer may reflect the limits of the manufacturer's standard product line and details.

6.2 HSS VERSUS W-SHAPE COLUMNS

The design of columns in industrial buildings includes considerations that do not apply to other types of structures. Interior columns can normally be braced only at the top and bottom; thus, square HSS columns are desirable due to their equal stiffness about both principal axes. Difficult connections with HSS members can be eliminated in single-story frames by placing the beams over the tops of the HSS. Thus, a simple-to-fabricate cap plate detail with bearing stiffeners on the girder web may be designed. Other advantages of HSS columns include the fact that they require less paint than equivalent W-shapes, and they are pleasing aesthetically.

W-shapes may be more economical than HSS for exterior columns for the following reasons:

1. The wall system (girts) may be used to brace the weak axis of the column. It should be noted that a stiffener or brace may be required for the column if the inside column flange is in compression and the girt connection is assumed to provide a braced point in design.
2. Bending moments due to wind loads are predominant about one axis.
3. It is easier to frame girt connections to a W-shape than to an HSS section. Because HSS have no flanges, extra clip angles are required to connect girts.

6.3 MEZZANINE AND PLATFORM FRAMING

Mezzanines and platforms are often required in industrial buildings. Design considerations are dictated by the type of usage. For proper design the designer needs to consider the following design parameters:

1. Occupancy or use
2. Design loads (uniform and concentrated)
3. Deflection criteria

Table 6-1. Relative Costs*						
Joist Data		Main Framing W-Shape Members				
		Span, ft				
Depth, in.	Span, ft	25	30	40	48	60
16	25	1.10	1.10	1.25	1.31	1.53
18	30	1.12	1.07	1.20	1.28	1.50
24	40	1.16	1.05	1.15	1.28	1.47
30	50	1.22	1.18	1.20	1.30	1.54
32	60	1.33	1.30	1.30	1.33	1.60

* Cost included fabrication and erection of primary and secondary framing (no deck). A total gravity load of 48 psf was used in all designs. Uplift and lateral bracing requirements were not included.

4. Surface type
   a. Raised pattern plate
   b. Smooth plate
   c. Concrete composite slab
   d. Concrete noncomposite slab
   e. Hollow core slabs (topped or untopped)
   f. Plywood
   g. Guard rail requirements, including removable sections
   h. Future expansion
   i. Vibration control
   j. Lateral stability requirements

6.4 ECONOMIC CONSIDERATIONS

As previously mentioned, bay sizes and column spacing are often dictated by the function of the building. Economics, however, should also be considered. In general, as bay sizes increase, the weight of the horizontal framing increases. This will mean additional cost unless offset by savings in foundations or erection. Studies have indicated that square or slightly rectangular bays usually result in more economical structures.

In order to evaluate various framing schemes, a prototype general merchandise structure was analyzed using various spans and component structural elements. The structure was a 240-ft × 240-ft building with a 25-ft eave height. The total roof load was 48 psf, and beams with $F_y = 50$ ksi were used. Columns were HSS with a yield strength of 50 ksi. Only gravity loads were considered.

Variables in the analysis were:

1. Joist spans: 25 ft, 30 ft, 40 ft, 50 ft, and 60 ft
2. Girder spans, W-shapes: 25 ft, 30 ft, 40 ft, 48 ft, and 60 ft

Cost data were determined from several fabricators. The data did not include sales tax or shipping costs. The study yielded several interesting conclusions for engineers involved in industrial building design. An examination of the tabular data in Table 6-1 shows that the most economical framing scheme was the one with beams spanning 30 ft and joists spanning 40 ft.

Another factor that may be important is that for the larger bays (greater than 30 ft), normal girt construction becomes less efficient using C- or Z-shaped sections without intermediate wind columns being added. For the 240-ft × 240-ft building being considered, wind columns could add $0.10 per square foot of roof to the cost. Interestingly, if the building were 120 ft × 120 ft, the addition of intermediate wind columns would add $0.20 per square foot because the smaller building has twice the perimeter-to-area ratio compared to the larger structure.

Additional economic and design considerations are as follows:

1. When steel joists are used in the roof framing it is generally more economical to span the joists in the long direction of the bay.
2. K-series joists are more economical than LH joists; thus, an attempt should be made to limit spans to those suitable for K-series joists.
3. For 30-ft to 40-ft bays, efficient framing may consist of continuous or double-cantilevered girders supported by columns in one direction and joists spanning the other direction.
4. If the girders are continuous, plastic design is often used. Connection costs for continuous members may be higher than for cantilever design; however, a plastically designed continuous system will have superior behavior when subjected to pattern load cases. All flat-roof systems must be checked to prevent ponding problems. See Section 3.5.

5. Simple-span rolled beams are often substituted for continuous or double-cantilevered girders where spans are short. The simple-span beams often have adequate flexural strength. The connections are simple, and the savings from easier erection of such systems may overcome the cost of any additional weight.
6. For large bay dimensions in both directions, a popular system consists of cold-formed or hot-rolled steel purlins or joists spanning 20 ft to 30 ft to secondary trusses spanning to the primary trusses. This framing system is particularly useful when heavily loaded monorails must be hung from the structure. The secondary trusses in conjunction with the main trusses provide excellent support for the monorails.
7. Consideration must be given to future expansion and/or modification, where columns are either moved or eliminated. Such changes can generally be accomplished with greater ease where simple-span conditions exist.

Chapter 7
Bracing Systems

7.1 RIGID-FRAME SYSTEMS

There are many considerations involved in providing lateral stability to industrial structures. If a rigid frame is used, lateral stability parallel to the frame is provided by the frame. However, for loads perpendicular to the main frames and for wall bearing and "post and beam" construction, lateral bracing is not inherent and must be provided. It is important to reemphasize that future expansion may dictate the use of a rigid frame or a flexible (movable) bracing scheme.

Because industrial structures are typically light and low in profile, wind and seismic forces may be relatively low. Rigid-frame action can be easily and safely achieved by providing a properly designed member at a column line. If joists are used as part of the rigid frame, the designer is cautioned on the following points:

1. The design loads must be given on the structural plans so that the proper design can be provided by the joist manufacturer. The procedure must be used with conscious engineering judgment and full recognition that standard steel joists are designed as simple-span members subject to distributed loads. (See the SJI *Specification*). Bottom chords are typically sized for tension only. The simple attachment of the bottom chord to a column to provide lateral stability will cause gravity load end moments that cannot be ignored. The designer should not try to select member sizes for these bottom chords because each manufacturer's design is unique and proprietary.
2. It is necessary for the designer to provide a well-designed connection to both the top and bottom chords to develop the induced moments without causing excessive secondary bending moments in the joist chords.
3. The system must have adequate stiffness to prevent drift related problems such as cracked walls and partitions, broken glass, leaking walls and roofs, and malfunctioning or inoperable overhead doors.

7.2 BRACED SYSTEMS

7.2.1 Roof Diaphragms

The most economical roof bracing system is achieved by use of a steel deck diaphragm. The deck is provided as the roofing element, and the effective diaphragm is obtained at little additional cost for extra deck connections. A roof diaphragm used in conjunction with wall X-bracing or a wall diaphragm system is probably the most economical bracing system that can be achieved. Diaphragms are most efficient in relatively square buildings; however, an aspect ratio up to three can be accommodated. A cold-formed steel diaphragm is analogous to the web of a plate girder. That is, its main function is to resist shear forces. The perimeter members of the diaphragm serve as the "flanges."

The design procedure is quite simple. The basic parameters that control the strength and stiffness of the diaphragm are:

1. Profile shape
2. Deck material thickness
3. Span length
4. The type and spacing of the fastening of the deck to the structural members
5. The type and spacing of the sidelap connectors

The profile, thickness, and span of the deck are typically based on gravity load requirements. The type of fastening (i.e., welding, screws, or power-driven pins) is often based on the designer's or contractor's preference. Thus, the main design variable is the spacing of the fasteners. The designer calculates the maximum shear per foot of diaphragm and then selects the fastener spacing from the load tables. Load tables are most often based on the requirements set forth in the SDI *Diaphragm Design Manual* and the AISI *North American Standard for the Design of Profiled Steel Diaphragm Panels* (AISI, 2016b), hereafter referred to as the AISI *Design of Profiled Steel Diaphragm Panels.*

Deflections are calculated and compared with serviceability requirements. The calculation of flexural deformations is handled in a conventional manner. Shear deformations can be obtained mathematically, using shear deflection equations if the shear modulus of the formed deck material making up the diaphragm is known. Deflections can also be obtained using empirical equations such as those found in the SDI *Diaphragm Design Manual* and the AISI *Design of Profiled Steel Diaphragm Panels.* In addition, most metal deck manufacturers publish tables in which strength and stiffness (or flexibility) information is presented. In order to illustrate the diaphragm design procedure, a design example is presented in the following text. The calculations presented are based on SDI's procedure.

7.2.1.1—Diaphragm Design Example

Given:

Design the roof diaphragm for the plan shown in Figure 7-1. Use 20-gage (0.0358-in.), 1½-in.-deep intermediate rib deck spanning 5 ft 6 in. to support the gravity loads. Steel joists span in the north-south direction. Use welds to connect the deck to the structural members and #10 screws for the sidelaps.

The nominal eave wind loads for LRFD and ASD are shown in Figure 7-1. Note that the length-to-width ratio of the diaphragm does not exceed 3, which is the typically accepted maximum for diaphragms.

Solution:

1. Calculate the maximum diaphragm shear.

LRFD	ASD
Shear: $V_r = \frac{WL}{2} = \frac{(323\text{ lb/ft})(208\text{ ft})}{2} = 33{,}600\text{ lb}$	Shear: $V_r = \frac{WL}{2} = \frac{(250\text{ lb/ft})(208\text{ ft})}{2} = 26{,}000\text{ lb}$
Shear per ft: $v_r = \frac{V_r}{span} = \frac{33{,}600\text{ lb}}{96\text{ ft}} = 350\text{ lb/ft}$	Shear per ft: $v_r = \frac{V_r}{span} = \frac{26{,}000\text{ lb}}{96\text{ ft}} = 271\text{ lb/ft}$

2. Obtain the shear capacity of the deck from the SDI *Diaphragm Design Manual*.

For a 20-gage (0.0358-in.), 1½-in.-deep intermediate rib deck, spanning 5 ft 6 in. with #10 sidelap screws, $\phi = 0.70$, $\Omega = 2.35$. The shear values from the SDI *Diaphragm Design Manual* are given in Table 7-1.

Use connector patterns as shown in Figure 7-2 for ASD.

3. Calculate the lateral deflection of the diaphragm (using 36/4 weld pattern and one sidelap screw). The deflection equations from the SDI *Diaphragm Design Manual*, Section 10, are:
   a. For bending:

$$\Delta_b = \frac{5wL^4}{384EI} \tag{7-1}$$

   b. For shear:

$$\Delta_s = \frac{wL^2}{8DG'} \tag{7-2}$$

where

D = diaphragm depth, ft

G' = shear stiffness as determined from SDI *Diaphragm Design Manual* tables, lb/in.

L = diaphragm span, ft

w = eave force, kip/ft

Table 7-1. Diaphragm Shear Values			
	Nominal Shear Strength	Design Shear Strength	
		LRFD	ASD
Connection Pattern	V_n, lb/ft	ϕV_n, lb/ft	V_n/Ω, lb/ft
36/4 weld pattern and one sidelap screw	615	431	262
36/4 weld pattern and two sidelap screws	715	501	304
36/5 weld pattern and one sidelap screw	785	550	334

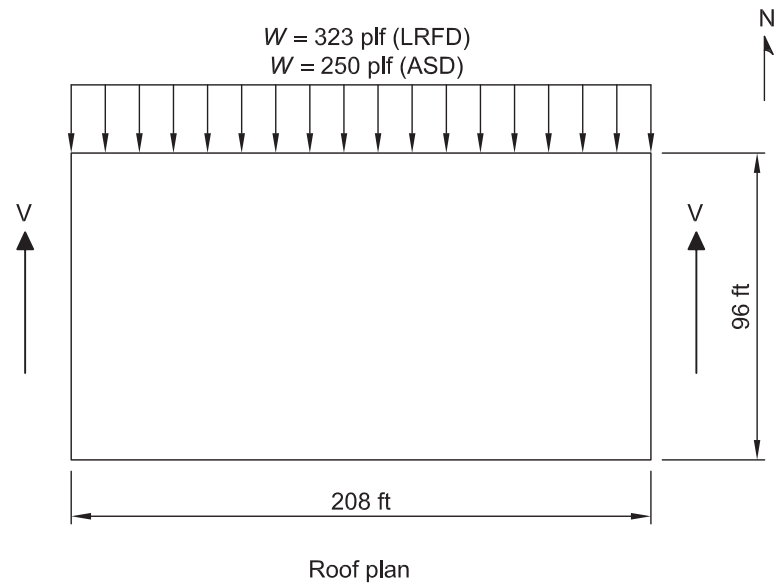

Fig. 7-1. Diaphragm plan.

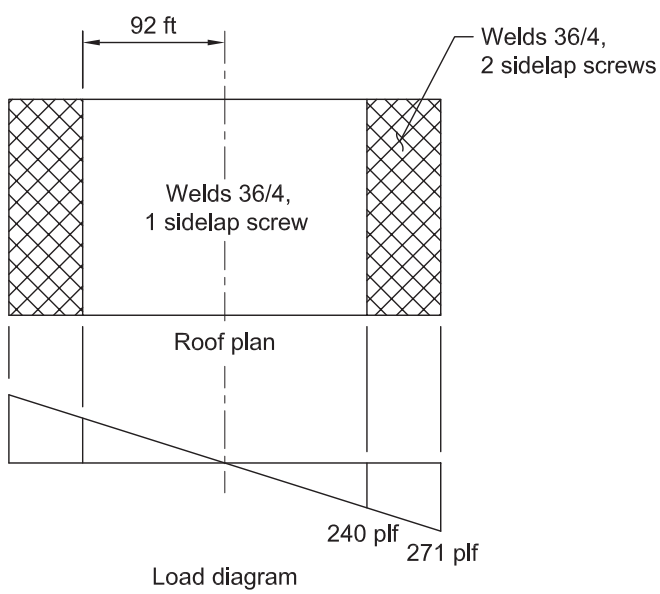

Fig. 7-2. Roof load diagram (ASD shears shown).

From the SDI *Diaphragm Design Manual*, Section 9:

$D_{xx} = D_{ir}$ (intermediate rib)
$= 645$ ft
$K_1 = 0.561$ ft^{-1}
$K_2 = 1{,}056$ kip/in.
$K_4 = 3.45$

For a bare deck:

$$G' = \frac{K_2}{K_4 + \left(\frac{0.3D_{xx}}{L_v}\right) + 3(K_1)(L_v)} \tag{7-3}$$

$$= \frac{1{,}056 \text{ kip/in.}}{3.45 + \left[\frac{0.3(645 \text{ ft})}{5.5 \text{ ft}}\right] + 3(0.561 \text{ ft}^{-1})(5.5 \text{ ft})}$$

$$= 22.1 \text{ kip/in.}$$

The moment of inertia, I, can be based on an assumed area of the perimeter member. Assuming the edge member has an area of 3.00 in.^{2}, the moment of inertia is:

$$I = 2Ad^2 \tag{7-4}$$

$$= 2(3.00 \text{ in.}^2)\left[(48 \text{ ft})(12 \text{ in./ft})\right]^2$$

$$= 1.99 \times 10^6 \text{ in.}^4$$

where
d = distance from centroid to outer edge, in.

The bending deflection can then be calculated as:

$$\Delta_b = \frac{5wL^4}{384EI} \tag{7-1}$$

$$= \frac{5(0.250 \text{ kip/ft})(208 \text{ ft})^4 (12 \text{ in./ft})^3}{384(29{,}000 \text{ ksi})(1.99 \times 10^6 \text{ in.}^4)}$$

$$= 0.182 \text{ in.}$$

The shear deflection can then be calculated as:

$$\Delta_s = \frac{wL^2}{8DG'} \tag{7-2}$$

$$= \frac{(0.250 \text{ kip/ft})(208 \text{ ft})^2}{8(96 \text{ ft})(22.1 \text{ kip/in.})}$$

$$= 0.637 \text{ in.}$$

And the total deflection is:

$$\Delta = \Delta_b + \Delta_s \tag{7-5}$$

$$= 0.182 \text{ in.} + 0.637 \text{ in.}$$

$$= 0.819 \text{ in.}$$

To transfer the shear forces into the east and west walls of the structure, the deck can be welded directly to the perimeter beams. The deck must be connected to the perimeter beams with the same number of fasteners as required in the field of the diaphragm.

The reader is cautioned regarding connecting steel deck to the end walls of buildings. If the deck is to be connected to a shear wall and a joist is placed next to the wall, allowance must be made for the camber in the edge joist in order to connect the deck to the wall system. If proper details are not provided, diaphragm connection may not be possible, and field adjustments may be required. Where the edge joist is eliminated near the endwall, the deck can often be pushed down flat on an endwall support. If the joist has significant camber, it may be necessary to provide simple-span pieces of deck between the wall and the first joist. A heavier deck thickness may be required due to the loss in continuity. The edge should be covered with a sheet metal cap to protect the roofing materials. This can present an additional problem because the sharp edge of the deck will stick up and possibly damage the roofing.

Along the north and south walls, a diaphragm chord can be provided by attaching an angle to the top of the joists as shown in Figure 7-3. The angle also stiffens the deck edge and prevents tearing of roofing materials along the edge where no parapet is provided under foot traffic. In some designs an edge angle may also be required for the sidelap connections for wind forces in the east-west direction. Also, shear connectors may be required to transfer these forces into the perimeter beam. A typical shear collector is shown in Figure 7-4.

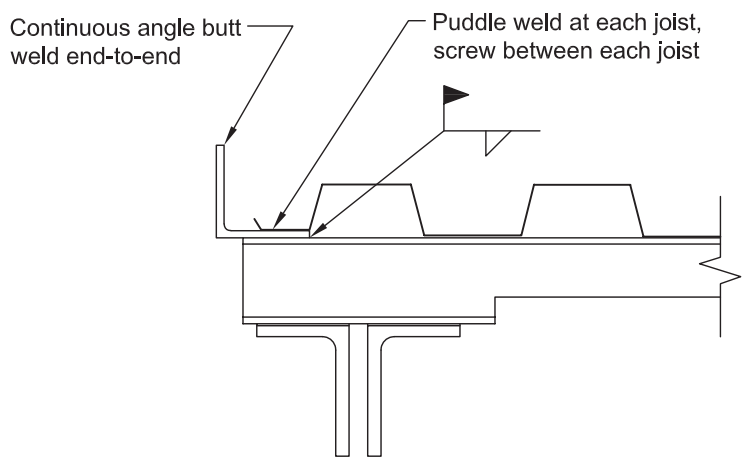

Fig. 7-3. Rake angle.

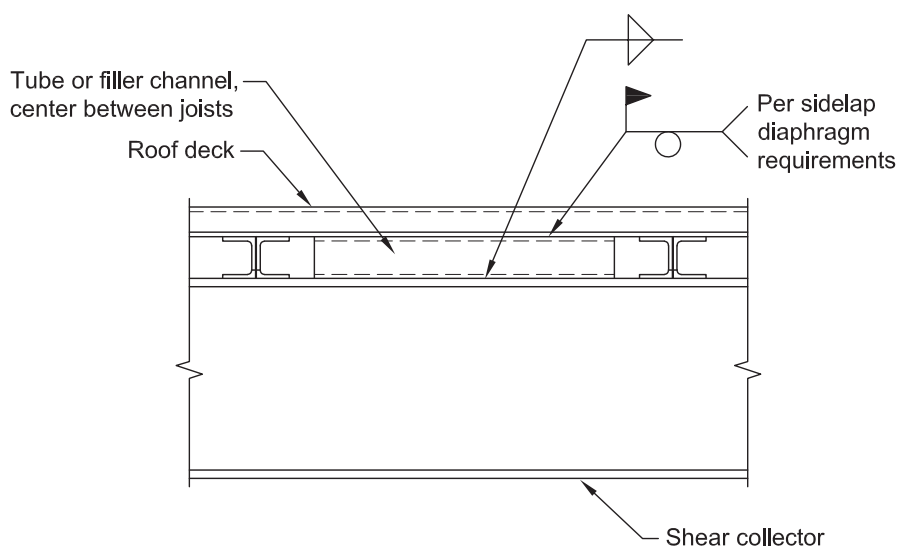

Fig. 7-4. Tube or filler channel.

7.2.2 Roof X-Bracing

An alternative to using the roof deck as the roof diaphragm is to use cross bracing to develop a horizontal truss system. As with the metal deck diaphragm, as the length-to-width ratio of the building becomes larger than 3-to-1, the diagonal forces in the truss members may require consideration of an alternate bracing method.

An especially effective way to develop a cross-braced roof is to utilize flat bar stock resting on the roof joists. The use of ¼-in.-thick bar stock does not usually interfere with deck placement and facilitates erection.

7.2.3 Vertical Bracing

In braced buildings, the roof diaphragm loads or the roof cross-bracing loads are transferred to a vertical braced frame, which in turn transfers the loads to the foundation level. In most cases, the vertical bracing is located at the perimeter of the structure so as not to interfere with plant operations. The vertical bracing configuration most frequently used is a cross-braced system using angles or rods designed only to function as tension members. However, in areas of high seismicity, a vertical bracing system that incorporates tension/compression members is often required. In these cases, other bracing forms may be used, such as chevron bracing or eccentrically braced frames. In buildings with large aspect ratios, bracing may be required in internal bays to reduce the brace forces and to reduce foundation overturning forces.

7.3 TEMPORARY BRACING

Proper temporary bracing is essential for the timely and safe erection and support of the structural framework until the permanent bracing system is in place. The need for temporary bracing is recognized in AISC *Specification* Section M4.2 and in AISC *Code of Standard Practice* Section 7.10.

The AISC *Code of Standard Practice* places the responsibility for temporary bracing solely with the erector. This is appropriate because temporary bracing is an essential part of the work of erecting the steel framework. While the general requirements of the AISC *Code of Standard Practice* are appropriate in establishing the responsibility for temporary erection bracing, two major issues have the potential to be overlooked in the process.

First, it is difficult to judge the adequacy of temporary bracing in any particular situation using only the general requirements as a guide. There is no codified standard that can be applied in judging whether or not a minimum level of conformity has been met. However, *Design Loads on Structures During Construction*, ASCE 37-14 (ASCE, 2014), and AISC Design Guide 10, *Erection Bracing of Low-Rise Structural Steel Buildings* (Fisher and West, 1997), can be useful in making evaluations of the adequacy of proposed temporary bracing and in establishing the need for such bracing.

Secondly, the AISC *Code of Standard Practice* does not emphasize that the process of erection can induce forces and stresses into components and systems such as footings and piers that are not part of the structural steel framework. Unless otherwise specified in the contract documents, it is the practice of architects and engineers to design the elements and systems in a building for the forces acting upon the completed structure only. An exception to this is the requirement in OSHA *Subpart R* that column bases be designed to resist a 300-lb downward force acting at 18 in. from the face of columns.

Without a detailed erection bracing plan, it is difficult for anyone in the design/construction process to evaluate the performance of the erector relative to bracing without becoming involved in the process itself. This is inconsistent with the determination that temporary bracing is the sole responsibility of the erector. The lack of emphasis on the necessity that the erector check the effect of erection-induced forces on other elements has, at times, allowed erection problems to be erroneously interpreted as having been caused by other reasons. This is most obvious in the erection of steel columns.

To begin and continue the erection of steel framework, it is necessary to erect columns first. This means that at one time or another, each building column is set in place without stabilizing framing attached to it in two perpendicular directions. Without such framing, the columns must cantilever for a time from the supporting footing or pier unless they are braced by adequate guys or unless the columns and beams are designed and constructed as rigid frames in both directions. The forces induced by the cantilevered column on the pier or footing may not have been considered by the building designer unless this had been specifically requested. It is incumbent upon the steel erector to make a determination of the adequacy of the foundation to support cantilevered columns during erection.

Trial calculations suggest that large forces can be induced into anchor rods, piers, and footings by relatively small forces acting at or near the tops of columns. Also, wind forces can easily be significant, as can be seen in the following example. Figure 7-5 shows a section of an unbraced frame consisting of three columns and two beams. The beams ends are pinned. Wind forces are acting perpendicular to the frame line.

Using a shape factor of 2.0 for a 40-mph wind directed at the webs of the W12 columns, a service-level base moment of approximately 18 kip-ft occurs. If a 5-in. × 5-in. placement pattern were used with four anchor rods and an ungrouted base plate, a tensile force of approximately 21.6 kips would be applied to the two anchor rods. The allowable tensile strength for a ¾-in. ASTM F1554 (ASTM, 2019) Grade A36 anchor rod is 9.6 kips. Even if the bolts were

fully in the concrete, they would be severely overstressed and would likely fail. Four 1⅛-in. anchor rods would be required to resist the wind force.

Of course, not only the size of the anchor rod is affected, but the design of the base plate and its attachment to the column, the spacing of the anchor rods, and the design of the pier and footing must also be checked.

Guying can also induce forces into the structure in the form of base shears and uplift forces. These forces may not have been considered in the design of the affected members. This must also be checked by the erector. The placement of material such as decking on the incomplete structure can induce unanticipated loadings. This loading must also be considered explicitly. OSHA *Subpart R* states that no decking bundles may be placed on the frame until a qualified person has documented that a structure or portion of it is capable of supporting the load.

Erection bracing involves other issues as well. First, the AISC *Code of Standard Practice* distinguishes between frames in which the frame is stabilized by construction in the control of the erector versus those frames in which other nonstructural steel elements are required for the stability of the frame. The distinction is drawn because the timing of the removal of bracing is affected. In a structural steel frame, where lateral stability is achieved in the design and detailing of the framework itself, the bracing can be removed when the erector's work is complete. Steel framework that relies on elements other than the structural steel to provide lateral stability should have the necessary elements providing the stability identified in the contract documents along with the schedule of their completion. The coordination of the installation of such elements is a matter that must be addressed by the general contractor.

In some instances, the steel frame is providing lateral support for other elements such as masonry walls. In these cases, it may be necessary to install and leave temporary bracing for the masonry in place until the mortar has cured and the permanent support for the wall is erected.

Temporary support beyond the requirements discussed in the preceding text would be the responsibility of the owner according to the AISC *Code of Standard Practice*. For example, if the steel frame and its temporary bracing are to support other nonstructural elements, the responsibility for this must be clearly identified and the reactions from the elements are to be provided to the erector. Otherwise the responsibility for this falls to others, not the erector.

The timing of column base grouting affects the performance of column bases during erection. The AISC *Code of Standard Practice* establishes the timing of grouting and assigns the responsibility for grouting to the owner. The erector should be aware of the schedule for this work.

All of the foregoing draws attention to the need for care, attention, and thoroughness on the part of the erector in preparing and following a temporary bracing and erection scheme.

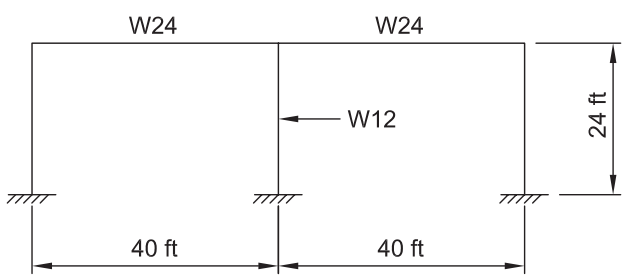

Fig. 7-5. Erection bracing example.

Chapter 8
Column Anchorage

Building columns must be anchored to the foundation system to transfer tensile forces, shear forces, and overturning moments. This Design Guide is limited to the design of column anchorage for tensile forces. The principles discussed here can be applied to the design of anchorage for overturning moments. The reader is referred to *Base Plate and Anchor Rod Design*, AISC Design Guide 1 (Fisher and Kloiber, 2006), hereafter referred to as AISC Design Guide 1, for an extensive treatment of base plates and anchor rod design plus methods of resisting shear loads.

Improper design, detailing, and installation of anchor rods has caused numerous structural problems in industrial buildings. These problems include:

1. Inadequate sizing of the anchor rods.
2. Inadequate development of the anchor rods for tension.
3. Inadequate design or detailing of the foundation for forces from the anchor rods.
4. Inadequate base plate thickness.
5. Inadequate design and/or detailing of the anchor rod-to-base plate interface.
6. Misalignment or misplacement of the anchor rods during installation.
7. Fatigue.

The reader should be familiar with the OSHA requirements contained in *Safety and Health Standards for the Construction Industry, 29 CFR Part 1926 Part R Safety Standards for Steel Structures* (OSHA, 2010b). This document was partially produced to prevent construction accidents associated with column base plates. For example, it requires that all column bases have four anchor rods. The following discussion presents methods of designing and detailing column bases.

8.1 RESISTING TENSILE FORCES WITH ANCHOR RODS

The design of anchor rods for tension consists of four steps:

1. Determine the maximum net uplift for the column.
2. Select the anchor rod material and number and size of anchor rods to accommodate this uplift.
3. Determine the appropriate base plate size, thickness, and welds to transfer the uplift forces. Refer to AISC Design Guide 1.
4. Determine the method for developing the anchor rod in the concrete (i.e., transferring the tensile force from the anchor rod to the concrete foundation).

Step 1

The maximum net uplift for the column is obtained from the structural analysis of the building for the prescribed building loads. The use of light metal roofs on industrial buildings is very popular. As a result of this, the uplift due to wind often exceeds the dead load; thus, the supporting columns are subjected to net uplift forces. In addition, columns in rigid bents or braced bays may be subjected to net uplift forces due to overturning.

Step 2

Anchor rods should be specified to conform to ASTM F1554. Grades 36, 55, and 105 are available in this specification where the grade number represents the yield stress of the anchor. Unless otherwise specified, the end of the anchor will be color coded to identify its grade. Welding is permitted to Grade 36 and Grade 55 if it conforms to the ASTM F1554 Supplementary Requirement S1.

Anchor rods should no longer be specified to ASTM A307 (ASTM, 2019) even if the intent is to use the A307 Grade C anchor rod that conforms to ASTM A36 (ASTM, 2019) properties. Anchor rods conforming to the ASTM specifications listed for anchor rods and threaded rods in AISC *Specification* Section A3.4 can be used.

The number of anchor rods required is a function of the maximum net uplift on the column and the allowable tensile load per rod for the anchor rod material chosen. Prying forces in anchor rods are typically neglected. This is usually justified when the base plate thickness is calculated assuming cantilever bending about the web and/or flange of the column section (as described in step 3). However, calculations have shown that prying forces may not be negligible when the rods are positioned outside the column profile and the rod forces are large. A conservative estimate for these prying forces can be obtained using a method similar to that described for hanger connections in the AISC *Steel Construction Manual* (AISC, 2017), hereafter referred to as the AISC *Manual*.

Another consideration in selection and sizing of anchor rods is fatigue. For most building applications where uplift loads are generated from wind and seismic forces, fatigue

can be neglected because the maximum design wind and seismic loads occur infrequently. However, for anchor rods used to anchor machinery or equipment where the full design loads may occur more often, fatigue should be considered. In addition, in buildings where crane load cycles are significant, fatigue should also be considered. AIST TR-13 for the design of steel mill buildings recommends that 50% of the maximum crane lateral loads or side thrust be used for fatigue considerations.

In the past, attempts have been made to pretension or preload anchor rods in the concrete to prevent fluctuation of the tensile stress in anchor rods and, therefore, eliminate fatigue concerns. This is not recommended unless the anchor rods are retensioned to accommodate creep in the supporting concrete foundation. If setting nuts are employed below the base plate, pretensioning can be employed to provide a tight connection between the base plate and the anchors.

Fatigue provisions for bolts and threaded parts can be determined as provided in AISC *Specification* Appendix 3.

Step 3

Base plate thickness may be governed by bending associated with compressive loads or tensile loads. However, for lightly loaded base plates where the dimensions "m" and "n" (as defined in this procedure) are small, thinner base plate thicknesses can be obtained using yield line theory.

For tensile loads, a simple approach is to assume the anchor rod loads generate bending moments in the base plate consistent with cantilever action about the web or flanges of the column section (one-way bending). If the web is taking the anchor load from the base plate, the web and its attachment to the base plate should be checked. A more refined analysis for anchor rods positioned inside the column flanges would consider bending about both the web and the column flanges (two-way bending). For the two-way bending approach, the derived bending moments should be consistent with compatibility requirements for deformations in the base plate. In either case, the effective bending width for the base plate can be conservatively approximated using a 45° distribution from the centerline of the anchor rod to the face of the column flange or web. Calculations for required base plate thickness for uplift (tensile) loads are illustrated in AISC Design Guide 1.

Step 4

For the transfer of forces to the concrete foundation, AISC *Specification* Section J9 defers to *Building Code Requirements for Structural Concrete and Commentary*, ACI 318-14 (ACI, 2014). ACI 318-14, Chapter 17, addresses the anchoring to concrete of cast-in or post-installed expansion or undercut anchors. In the method, the concrete cone is considered to be formed at an angle of approximately 35° (1 to 1.5 slopes). For simplification of application, the cone is considered to be square rather than round in plan.

The concrete breakout stress, f_t, in the method is considered to decrease with increase in size of the breakout surface. Consequently, the increase in strength of the breakout in the method is proportional to the embedment depth to the power of 1.5 (or to the power of ⅔ for deeper embedment).

In many cases, it is necessary to use reinforcement to anchor the breakout cone in order to achieve the shear capacity as well as the ductility desired.

Careful consideration should be given to the size of the anchor rod holes in the base plate when transferring shear forces from the column base plate to the anchor rods. The designer should use the recommended anchor rod hole diameters and minimum washer diameters as shown in AISC *Manual* Table 14-2. These recommended hole sizes vary with rod diameter and are considerably larger than normal bolt hole sizes. If slip of the column base before bearing against the anchor rods is of concern, then the designer should consider using plate washers between the base plate and the anchor rod nut. Plate washers with holes 1⁄16 in. larger than the anchor rods can be welded to the base plate so that minimal slip will occur. Alternatively, a setting plate can be used, and the base plate of the column welded to the setting plate. The setting plate thickness must be determined for proper bearing against the anchor rods.

8.2 PARTIAL BASE FIXITY

In some cases, the designer may want to consider designing a column base that is neither pinned nor fixed. These may be cases where full fixity cannot be obtained or where the designer wants to know the effect of partial fixity. The treatment of partial fixity is beyond the scope of this Design Guide; however, an excellent treatment of partial fixity can be found in the paper, "Stiffness Design of Column Bases" (Wald and Jaspart, 1998).

Chapter 9
Serviceability Criteria

The design of the lateral load envelope (i.e., the roof bracing and wall-support system) must provide for the code imposed loads, which establish the required strength of the structure. A second category of criteria establishes the serviceability limits of the design. These limits are rarely codified and are often selectively applied project by project based on the experience of the parties involved.

In AISC Design Guide 3, several criteria are given for the control of building drift and wall deflection. These criteria, when used, should be presented to the building owner as they help establish the quality of the completed building.

To be useful, a serviceability criterion must set forth three items: loading, performance limits, and an analysis approach. Concerning lateral forces, the loading recommended by AISC Design Guide 3 is the pressure due to wind speeds associated with a 10-year recurrence interval. These pressures are approximately 75% of the pressures for strength design criteria, based on a 50-year return period. The establishment of deflection limits will follow, with criteria given for each of the wall types previously presented. The author recommends that frame drift be calculated using the bare steel frame only. Likewise, the calculations for deflection of girts should be made using the bare steel section. The contribution of nonstructural components acting compositely with the structure to limit deflection is often difficult to quantify. Thus, the direct approach (neglecting nonstructural contribution) is recommended, and the loads and limits are calibrated to this analysis approach. The deflection limits for the various roof and wall systems are discussed in the following sections.

9.1 SERVICEABILITY CRITERIA FOR ROOF DESIGN

In addition to meeting strength criteria in the design of the roof structure, it is also necessary to provide for the proper performance of elements and systems attached to the roof, such as roofing, ceilings, and hanging equipment. This requires the control of deflections in the roof structure. Various criteria have been published by various organizations. These limits are:

1. Steel Deck Institute (SDI, 2017b):
   a. Maximum deflection of deck due to uniformly distributed live load: span over 240.
   b. Maximum deflection of deck due to a 200-lb concentrated load at midspan on a 1-ft section of deck: span over 240.
2. Steel Joist Institute (SJI, 2015b):
   a. Maximum deflection of joists supporting plaster ceiling due to design live load: span over 360.
   b. Maximum deflection of joists supporting ceilings other than plaster ceilings due to design live load: span over 240.
3. National Roofing Contractors Association (NRCA, 2015):
   a. Maximum deck deflection due to full uniform load: span over 240.
   b. Maximum deck deflection due to a 300-lb load at midspan: span over 240.
   c. Maximum roof structure deflection due to total load: span over 240.
4. FM Global (2019):
   a. Maximum deck deflection due to a 300-lb concentrated load at midspan: span over 200.

AISC Design Guide 3 also presents deflection limits for purlins supporting structural steel roofs (both through fastener types and standing seam types). First, a limiting deflection of span over 150 for snow loading is recommended. Secondly, attention is drawn to conditions where a flexible purlin parallels nonyielding construction, such as at the building eave. In this case, deflection should be controlled to maintain positive roof drainage. The appropriate design load is suggested as dead load plus 50% of snow load or dead load plus 5-psf live load to check for positive drainage under load.

Mechanical equipment, hanging conveyors, and other roof-supported equipment have been found to perform adequately on roofs designed with deflection limits in the range of span over 150 to span over 240, but these criteria should be verified with the equipment manufacturer and building owner. Consideration should also be given to differential deflections and localized loading conditions.

9.2 METAL WALL PANELS

Relative to serviceability, metal wall panels have two desirable attributes—their corrugated profiles make them fairly limber for out-of-plane distortions and their material and fastening scheme are ductile (i.e., distortions and possible yielding do not produce fractures). Also, the material for edge and corner flashing and trim typically allows movement and distortion without failure. Because of this, the

deflection limits associated with metal panel buildings are relatively generous. From AISC Design Guide 3 (West et al., 2003) they are:

1. Frame deflection (drift) perpendicular to the wall surface of frame: eave height divided by 60 to 100.
2. The deflection of girts and wind columns should be limited to span over 120, unless wall details and wall supported equipment require stricter limits.

9.3 PRECAST WALL PANELS

Non-load-bearing precast wall panels frequently span from grade to eave as simple-span members. Therefore, drift does not change the statics of the panel. The limitation on drift in the building frame is established to control the amount of movement in the joint at the base of the panel as the frame drifts. This limit has been proposed to be eave height over 100. A special case exists when precast panels are set atop the perimeter foundations to eliminate a grade wall. The foundation anchorage, the embedment of the panel in the soil, and the potential of the floor slab to act as a fulcrum mean that the frame deflections must be analyzed for compatibility with the panel design. It is possible to tune frame drift with panel stresses, but this requires interaction between frame designer and panel designer. Usually the design of the frame precedes that of the panel. In this case, the frame behavior and panel design criteria should be carefully specified in the construction documents.

9.4 MASONRY WALLS

Masonry walls may be hollow, grouted, solid, or grouted and reinforced. Masonry itself is a brittle, nonductile material. Masonry with steel reinforcement has ductile behavior overall but will show evidence of cracking when subjected to loads that stress the masonry in tension. When masonry is attached to supporting steel framework, deflection of the supports may induce stresses in the masonry. It is rarely feasible to provide sufficient steel (stiffness) to keep the masonry stresses below cracking levels. Thus, flexural tension cracking in the masonry is likely and, when properly detailed, is not considered a detriment. The correct strategy is to impose reasonable limits on the support movements and detail the masonry to minimize the impact of cracking.

Masonry should be provided with vertical control joints at the building columns and wind columns. This prevents flexural stresses on the exterior face of the wall at these locations from inward wind. Because the top of the wall is generally free to rotate, no special provisions are required there. Most difficult to address is the base of the wall joint. To carry the weight of the wall, the base joint must be solid, not caulked. Likewise, the mortar in the joints makes the base of the wall a fixed condition until the wall cracks.

Frame drift recommendations are set to limit the size of the inevitable crack at the base of the wall. Because reinforced walls can spread the horizontal base cracks over several joints, separate criteria are given for them. If proper base joints are provided, reinforced walls can be considered as having the behavior of precast walls—that is, simple-span elements with pinned bases. In that case, the limit for precast wall panels would be applicable. Where wainscot walls are used, consideration must be given to the joint between metal wall panel and masonry wainscot. The relative movements of the two systems in response to wind must be controlled to maintain the integrity of the joint between the two materials.

The recommended limits for the deflection of elements supporting masonry are (West et al., 2003):

1. Frame deflection (drift) perpendicular to an unreinforced wall should allow no more than a 1⁄16-in. crack to open in one joint at the base of the wall. The drift allowed by this criterion can be conservatively calculated by relating the wall thickness to the eave height and taking the crack width at the wall face as 1⁄16-in. and zero at the opposite face.
2. Frame deflection (drift) perpendicular to a reinforced wall is recommended to be eave height over 100.
3. The deflection of wind columns and girts should be limited to span over 240, but not greater than 1.5 in.

PART 2
INDUSTRIAL BUILDINGS WITH CRANES

Chapter 10
Introduction to Part 2

This section of the Guide deals with crane buildings and will include coverage of those aspects of industrial buildings peculiar to the existence of overhead and underhung cranes. In that context, the major difference between crane buildings and other industrial buildings is the frequency of loading caused by the cranes. Thus, crane buildings should be classified for design purposes according to the frequency of loading.

Crane building classifications have been established in the *Guide for the Design and Construction of Mill Buildings*, AIST TR-13 (AIST, 2003), as Classes A, B, C, and D. Classifications for cranes have been established by the Crane Manufacturers Association of America (CMAA), *Specification for Top Running Bridge and Gantry Type Multiple Girder Electric Overhead Traveling Cranes—No. 70* (CMAA, 2015a), hereafter referred to as CMAA 70. These designations should not be confused with the building designations.

10.1 AIST TR-13 BUILDING CLASSIFICATIONS

Class A is a building in which members may experience either 500,000 to 2,000,000 repetitions or over 2,000,000 repetitions in the estimated life span of the building of approximately 50 years. The owner must analyze the service and determine which load condition may apply. It is recommended that the following building types be considered as Class A:

Batch annealing buildings

Scrap yards

Billet yards

Skull breakers

Continuous casting buildings

Slab yards

Foundries

Soaking pit buildings

Mixer building

Steelmaking buildings

Mold conditioning buildings

Stripper buildings

Scarfing yards

Other buildings based on predicted operational requirements

Class B is a building in which members may experience a repetition of 100,000 to 500,000 cycles of a specific loading or 5 to 25 repetitions of such load per day for a life of approximately 50 years.

Class C is a building in which members may experience a repetition of 20,000 to 100,000 cycles of a specific loading during the expected life of a structure, or one to five repetitions of such load per day for a life of approximately 50 years.

Class D is a building in which no member will experience more than 20,000 repetitions of a specific loading during the expected life of a structure.

10.2 CMAA CRANE CLASSIFICATIONS

The following classifications are taken directly from CMAA 70.

10-2 CRANE CLASSIFICATIONS

2.1 Service classes have been established so that the most economical crane for the installation may be specified in accordance with this specification.

The crane service classification is based on the load spectrum reflecting the actual service conditions as closely as possible.

Load spectrum is a mean effective load, which is uniformly distributed over a probability scale and applied to the equipment at a specified frequency. The selection of the properly sized crane component to perform a given function is determined by the varying load magnitudes and given load cycles which can be expressed in terms of the mean effective load factor.

$$K = \sqrt[3]{W_1^3 P_1 + W_2^3 P_2 + W_3^3 P_3 + W_n^3 P_n} \qquad (10\text{-}1)$$

where

K = Mean effective load factor (used to establish crane service class only).

P = Load probability; expressed as a ratio of cycles under each load magnitude condition to the total

cycles. The sum total of the load probabilities P must equal 1.0.

W = Load magnitude; expressed as a ratio of each lifted load to the rated capacity. Operation with no lifted load and the weight of any attachment must be included.

All classes of cranes are affected by the operating conditions, therefore for the purpose of the classifications, it is assumed that the crane will be operating in normal ambient temperature of 0° to 104°F (–17.7° to 40°C) and normal atmospheric conditions (free from excessive dust, moisture and corrosive fumes).

The cranes can be classified into loading groups according to the service conditions of the most severely loaded part of the crane. The individual parts that are clearly separate from the rest or forming a self-contained structural unit can be classified into different loading groups if the service conditions are fully known.

2.2 CLASS A (STANDBY OR INFREQUENT SERVICE)

This service class covers cranes which may be used in installations such as powerhouses, public utilities, turbine rooms, motor rooms and transformer stations where precise handling of equipment at slow speeds with long, idle period between lifts are required. Capacity loads may be handled for initial installation of equipment and for infrequent maintenance.

2.3 CLASS B (LIGHTSERVICE)

This service covers cranes which may be used in repair shops, light assembly operations, service buildings, light warehousing, etc., where service requirements are light and the speed is slow. Loads may vary from no load to occasional full rated loads with two to five lifts per hour, averaging ten feet per lift.

2.4 CLASS C (MODERATE SERVICE)

This service covers cranes which may be used in machine shops or paper mill machine rooms, etc., where service requirements are moderate. In this type of service the crane will handle loads which average 50% of the rated capacity with 5 to 10 lifts per hour, averaging 15 ft, not over 50% of the lift at rated capacity.

2.5 CLASS D (HEAVY SERVICE)

This service covers cranes which may be used in heavy machine shops, foundries, fabricating plants, steel warehouses, container yards, lumber mills, etc., and standard duty bucket and magnet operations where heavy duty production is required. In this type of service, loads approaching 50% of the rated capacity will be handled constantly during the working period. High speeds are desirable for this type of service with 10 to 20 lifts per hour averaging 15 ft, not over 65% of the lifts at rated capacity.

2.6 CLASS E (SEVERE SERVICE)

This type of service requires a crane capable of handling loads approaching a rated capacity throughout its life. Applications may include magnet/bucket combination cranes for scrap yards, cement mills, lumber mills, fertilizer plants, container handling, etc., with twenty or more lifts per hour at or near the rated capacity.

2.7 CLASS F (CONTINUOUS SEVERE SERVICE)

This type of service requires a crane capable of handling loads approaching rated capacity continuously under severe service conditions throughout its life. Applications may include custom designed specialty cranes essential to performing the critical work tasks affecting the total production facility. These cranes must provide the highest reliability with special attention to ease of maintenance features.

The class of crane, the type of crane, and loadings all affect the design. The fatigue associated with crane class is especially critical for the design of crane runways and connections of crane runway beams to columns. Classes E and F produce particularly severe fatigue conditions. The determination of fatigue stress levels and load conditions is discussed in more detail in the next section.

The CMAA 70 crane classifications do not relate directly to the AISC *Specification* Appendix 3 fatigue provisions. Fatigue provisions in previous versions of the AISC *Specification*, such as the 1989 edition (AISC, 1989), included "Loading Conditions" based on the number of loading cycles. These loading conditions, while not directly related to the CMAA crane classifications, were presented in the previous editions of this Design Guide corresponding to the average number of lifts for each CMAA 70 crane classification. They are included here in Table 10-1 because they may be of value in some instances.

The approximate number of loading cycles for each loading condition is given in the 1989 AISC *Specification* Table A-K4.1. The table is repeated here as Table 10-2.

The AISC *Specification* no longer refers to loading conditions and provides equations to determine an allowable stress range for a given number of stress cycles. The AISC *Specification* states that, "The engineer of record shall provide either complete details including weld sizes or shall specify the planned cycle life and the maximum range of moments, shears and reactions for the connections." To use the equations, the designer must enter the value of n_{SR}, which is the stress range fluctuation in design life, into the appropriate design equations provided in AISC *Specification* Appendix 3. If required, n_{SR} can be estimated from Table 11-1.

Table 10-1. Crane Loading Conditions	
CMAA Crane Classification	**1989 AISC *Specification* Loading Condition**
A, B	1
C, D	2
E	3
F	4

Table 10-2. AISC Loading Cycles		
Loading Condition	**From**	**To**
1	20,000[a]	100,000[b]
2	100,000	500,000[c]
3	500,000	2,000,000[d]
4	Over 2,000,000	

[a] Approximately equivalent to two applications every day for 25 years.
[b] Approximately equivalent to 10 applications every day for 25 years.
[c] Approximately equivalent to 50 applications every day for 25 years.
[d] Approximately equivalent to 200 applications every day for 25 years.

The 2016 AISC *Specification* fatigue provisions are the most up-to-date provisions and are recommended for use by the author.

The designer must carefully consider whether or not the requirements of AIST TR-13 must be followed for a given structure or whether only the requirements of the building code need be followed. This decision is generally made based on the CMAA crane classifications and the AIST TR-13 building classifications. For CMAA Crane Classifications A, B, C, and in some cases Class D, the AIST TR-13 requirements are generally not required. These differences should be kept in mind by the reader of this Design Guide.

Chapter 11
Fatigue

Proper functioning of bridge cranes is dependent upon proper crane runway girder design and detailing. The runway design must account for the fatigue effects caused by the repeated passing of the crane. Runway girders should be thought of as a part of a system comprised of the crane rails, rail attachments, electrification support, crane stops, crane column attachment, tie backs, and the girder itself. All of these items should be incorporated into the design and detailing of the crane runway girder system.

Crane runway girder problems are associated with fatigue cracking in the majority of situations. However, engineers have designed crane runway girders that have performed with minimal problems while being subjected to millions of cycles of loading. The girders that are performing successfully have been properly designed and detailed to:

- Limit the applied stress range to acceptable levels.
- Avoid unexpected restraints at the attachments and supports.
- Avoid stress concentrations at critical locations.
- Avoid eccentricities due to rail misalignment or crane travel and other out-of-plane distortions.
- Minimize residual stresses.

Even when all state-of-the-art design provisions are followed, building owners can expect to perform periodic maintenance on runway systems. Runway systems that have performed well have been properly maintained by keeping the rails and girders aligned and level.

Some fatigue damage should be anticipated eventually, even in well-designed structures, because fabrication and erection cannot be perfect. Fabrication, erection, and maintenance of tolerance requirements in the AISC *Code of Standard Practice*, the American Welding Society (AWS) *Structural Welding Code—Steel* (AWS, 2015), and AIST TR-13 should be followed in order to provide predicted fatigue behavior.

Fatigue provisions have a 95% reliability factor (two standard deviations below mean curve of test data) for a given stress range and expected life condition. Thus, it is reasonable to expect that 5% of similar details can experience fatigue failure before the expected fatigue life is expired. However, if the designer chooses a design life of the structure to be shorter than the expected fatigue life according to AISC criteria, the reliability of a critical detail should be higher than 95%.

11.1 FATIGUE DAMAGE

Fatigue damage can be characterized as progressive crack growth due to fluctuating stress on the member. Fatigue cracks initiate at small defects or imperfections in the base material or weld metal. The imperfections act as stress risers that magnify the applied elastic stresses into small regions of plastic stress. As load cycles are applied, the plastic strain in the small plastic region advances until the material separates and the crack advances. At that point, the plastic stress region moves to the new tip of the crack, and the process repeats itself. Eventually the crack size becomes large enough that the combined effect of the crack size and the applied stress exceed the toughness of the material, and a final fracture occurs.

Fatigue failures result from repeated application of service loads, which cause crack initiation and propagation to final fracture. The dominant variable is the tensile stress range imposed by the repeated application of the live load, not the maximum stress that is imposed by live plus dead load. Fatigue damage develops in three stages: crack initiation, stable crack growth, and unstable crack growth to fracture. Of these, the crack initiation phase takes up about 80% of the total fatigue life; thus, when cracks are of detectible size, the fatigue life of a member or detail is virtually exhausted, and prompt remedial action should be taken. Abrupt changes in cross section, geometrical discontinuities such as toes of welds, unintentional discontinuities from lack of perfection in fabrication, and effects of corrosion and residual stresses all have a bearing on the localized range of tensile stress in details that lead to crack initiation. These facts make it convenient and desirable to structure fatigue design provisions on the basis of categories that reflect the increase in tensile stress range due to the severity of the discontinuities introduced by typical details. Application of stress concentration factors to stresses determined by typical analysis is not appropriate.

However, fluctuating compressive stresses in a region of tensile residual stress may cause a net fluctuating tensile stress or reversal of stress that may cause cracks to initiate.

The AISC *Specification* provides continuous functions in terms of cycles of life and stress range in lieu of the previous criteria for fatigue life that reflected the database only at the break points in the step-wise format. AISC *Specification* Appendix 3 uses a single table, Table A-3.1, that is divided into sections that describe various conditions. The sections are:

Table 11-1. CMAA Classification vs. Design Life	
CMAA Crane Classification	**Design Life**
A	20,000
B	50,000
C	100,000
D	500,000
E	1,500,000
F	>2,000,000

1. Plain material away from any welding
2. Connected material in mechanically fastened joints
3. Welded joints joining components of built-up members
4. Longitudinal fillet-welded end conditions
5. Welded joints transverse to direction of stress
6. Base metal at welded transverse member connections
7. Base metal at short attachments
8. Miscellaneous

AISC *Specification* Appendix 3 uses equations to calculate the allowable stress range for a selected design life for various conditions and associated stress categories.

The point of potential crack initiation is identified by description and shown in figures in Table A-3.1. The tables contain the threshold design stress, F_{TH}, for each stress category, and also provide the detail constant, C_f, applicable to the stress category that is required for calculating the design stress range, F_{SR}. For the majority of stress categories:

$$F_{SR} = 1{,}000\left(\frac{C_f}{n_{SR}}\right)^{0.333} \geq F_{TH}$$

(*Spec.* Eq. A-3-1)

where

C_f = constant taken from AISC *Specification* Table A-3.1 for the applicable stress category

F_{SR} = allowable stress range, ksi

F_{TH} = threshold allowable stress range, maximum stress range for indefinite design life from AISC *Specification* Table A-3.1, ksi

n_{SR} = number of stress range fluctuations in design life

The 2016 AISC *Specification*, as well as previous editions of the AISC *Specification*, limits the allowable stress range for a given service life based on an anticipated severity of the stress riser for a given fabricated condition.

CMAA 70 includes crane designations that define the anticipated number of full uniform amplitude load cycles for the life of the crane. The correlation of the CMAA crane designations for a given crane to the required fatigue life for the structure cannot be directly determined. The crane does not lift its maximum load or travel at the same speed every day or every hour. Shown in Table 11-1 are estimates of the number of cycles of full uniform amplitude for CMAA crane classifications A through F over a 40-year period. It must be emphasized that these are only guidelines, and actual duty cycles can only be established from the building's owner and the crane manufacturer.

Consideration of fatigue requires that the designer determine the anticipated number of full uniform amplitude load cycles. To properly apply the AISC *Specification* fatigue equations to crane runway girder fatigue analyses, one must understand the difference between the AISC fatigue provisions determined using data from cyclic constant amplitude loading tests and crane runway variable amplitude cyclic loadings. When AIST TR-13 is not specified, it is common practice for the crane runway girder to be designed for a service life that is consistent with the crane classification.

It should be noted that one crane will often involve more than one cycle on the structure (e.g., one cycle fully loaded and one cycle from the unloaded crane). In the evaluation of some runways, it is important to determine the cumulative fatigue damage resulting from variable amplitude loading. The reader is referred to the Palmgren-Miner rule (Collins, 1981). Also, for some details the passage of each wheel on the crane may be critical as compared to the total crane passage.

11.2 CRANE RUNWAY FATIGUE CONSIDERATIONS

The AISC *Specification* provisions as they relate to crane runway design will follow. A complete design example is provided in Fisher and Van de Pas (2002). The fatigue provisions discussed in the following assume that the girders are fabricated using the AWS provisions for cyclically loaded structures. In a few instances, additional weld requirements are recommended by AIST TR-13. These are pointed out in the following sections.

Tension Flange Stress

When runway girders are fabricated from plate material, fatigue requirements are more severe than for rolled shape girders. AISC *Specification* Appendix 3, Table A-3.1, Section 1, applies to plain material. Appendix 3, Table A-3.1, Section 3.3, applies to welded joints joining components of built-up members. Stress Category B is required for plate girders as compared to stress Category A for rolled shapes.

Web-to-Flange Welds

Appendix 3, Table A-3.1, Section 8.2, applies to shear in fillet welds that connect the web to tension and compression flanges, which is stress Category F. Cracks have been observed in plate girders at the junction of the web to the compression flange of runway girders when fillet welds are used to connect the web to the compression flange. Such cracking has been traced to localized tensile bending stresses in the bottom side of the compression flange plate with each wheel load passage. Each wheel passage may occur two or four or more times with each passage of the crane; thus, the life cycles for this consideration is generally several times greater than the life cycles to be considered in the girder live load stress ranges due to passage of the loaded crane. The calculation of such highly localized tensile bending stresses is so complex and unreliable that the problem is buried in conservative detail requirements. To reduce the likelihood of such cracks, AIST TR-13 recommends that the top flange-to-web joint be a CJP weld with fillet reinforcement.

Tiebacks

Tiebacks are provided at the end of the crane runway girders to transfer lateral forces from the girder top flange into the crane column and to laterally restrain the top flange of the crane girder against buckling; see Figure 11-1. The tiebacks must have adequate strength to transfer the lateral crane loads. However, the tiebacks must also be flexible enough to allow for longitudinal movement of the top of the girder caused by girder-end rotation. The amount of longitudinal movement due to the end rotation of the girder can be significant. The end rotation of a 40-ft girder that has undergone a deflection of $l/600$ is about 0.005 rad. For a 36-in.-deep

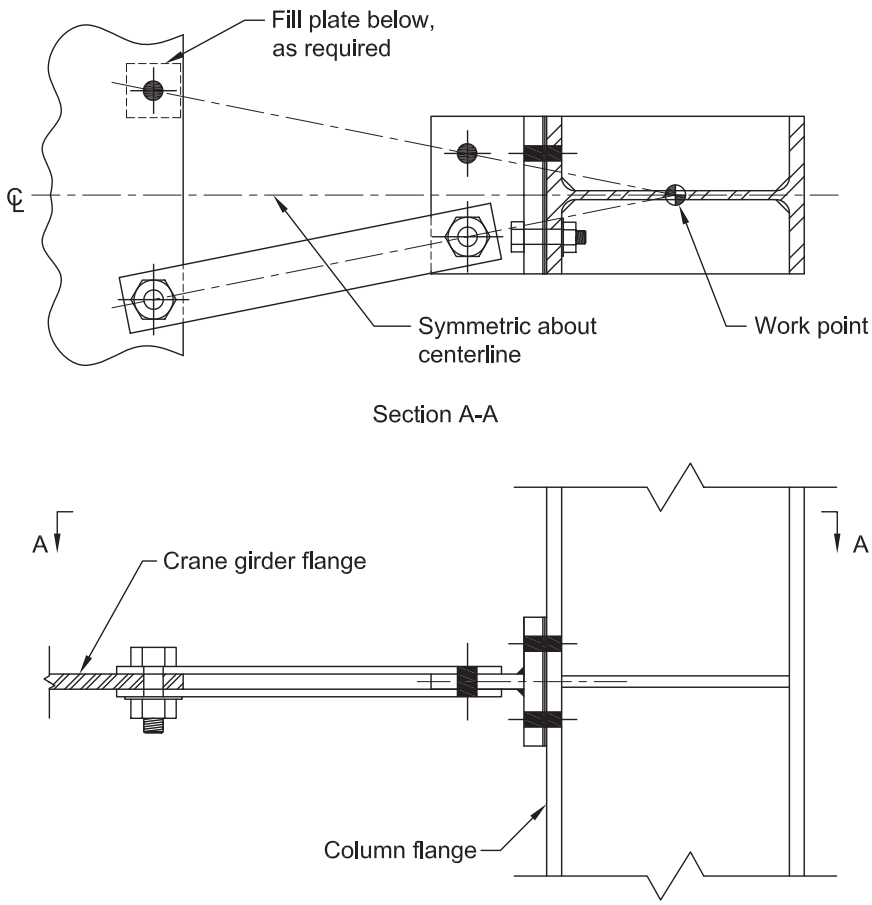

Fig. 11-1. Tieback detail.

girder, this results in 0.2 in. of horizontal movement at the top flange. The tieback must also allow for vertical movement due to axial shortening of the crane column. This vertical movement can be in the range of ¼ in. In general, the tieback should be attached directly to the top flange of the girder. Attachment to the web of the girder with a diaphragm plate should be avoided. The lateral load path for this detail causes bending stresses in the girder web perpendicular to the girder cross section. The diaphragm plate also tends to resist movement due to the axial shortening of the crane column. Various AISC fatigue provisions are applicable to the loads depending on the exact tieback configurations. In addition, a variety of proprietary tieback solutions designed to provide the required flexibility and lateral load resistance are available from crane runway product suppliers.

Bearing Stiffeners

Bearing stiffeners should be provided at the ends of the girders as required by the AISC *Specification*. Fatigue cracks have occurred at the connection between the bearing stiffener and the girder top flange. The cracks occurred in details where the bearing stiffener was fillet welded to the underside of the top flange. Passage of each crane wheel produces shear stress in the fillet welds. The AISC *Specification* fatigue provisions contain fatigue criteria for fillet welds in shear; however, the determination of the actual stress state in the welds is extremely complex; thus, AIST TR-13 recommends that CJP welds be used to connect the top of the bearing stiffeners to the top flange of the girder. The bottom of the bearing stiffeners may be fitted (preferred) or fillet welded to the bottom flange. All stiffener-to-girder web welds should be continuous. Horizontal cracks have been observed in the webs of crane girders with partial-height bearing stiffeners. The cracks start between the bearing stiffeners and the top flange and run longitudinally along the web of the girder. There are many possible causes for the propagation of these cracks. One possible explanation is that eccentricity in the placement of the rail on the girder causes distortion and rotation of the girder cross section.

Intermediate Stiffeners

If intermediate stiffeners are used, AIST TR-13 also recommends that the intermediate stiffeners be welded to the top flange with CJP welds for the same reasons as with bearing stiffeners. Stiffeners are permitted to be stopped short of the tension flange in accordance with the AISC *Specification* Section G2.3 provisions. AIST TR-13 also recommends continuous stiffener-to-web welds for intermediate stiffeners.

Fatigue must be checked where the stiffener terminates adjacent to the tension flange. This condition is addressed in AISC *Specification* Appendix 3, Table A-3.1, Section 5.7.

Cap Channels and Cap Plates

Cap channels or cap plates are frequently used to provide adequate top flange capacity to transfer lateral loads to the crane columns and to provide lateral torsional stability of the runway girder cross section. It should be noted that the cap channel or plate does not fit perfectly with 100% bearing on the top of the wide flange. The tolerances given in ASTM A6 allow the wide-flange member to have some flange tilt along its length, the plate may be cupped or slightly warped, or the channel may have some twist along its length. These conditions will leave small gaps between the top flange of the girder and the top plate or channel. The passage of the crane wheel over these gaps will tend to distress the channel or plate to top flange welds. Calculation of the stress condition for these welds is not practical. Because of this phenomenon, cap plates or channels should not be used with Class E or F cranes. For less severe duty cycle cranes, shear flow stress in the welds can be calculated and limited according to the AISC *Specification* fatigue provisions in Appendix 3, Table A-3.1, Section 8.2. The channel or plate welds to the top flange can be continuous or intermittent. However, the AISC design stress range for the base metal is reduced from Stress Category B (Appendix 3, Table A-3.1, Section 3.1) for continuous welds to Stress Category E (Appendix 3, Table A-3.1, Section 3.4) for intermittent welds. Because of the reduced fatigue life for intermittent welds and the potential stresses caused by a gap under the cap channel, it is recommended that only continuous welds be used to connect the cap channel to the beam flange.

To eliminate the fatigue problems associated with cap channel welds, angles can be welded to the top flange of the runway girders to provide the required lateral stability and to transfer the lateral loads.

Crane Column Cap Plates

The crane column cap plate should be detailed so it does not restrain the end rotation of the girder. If the cap plate girder bolts are placed between the column flanges, the girder end rotation is resisted by a force couple between the column flange and the bolts. This detail has been known to cause bolt failures. Preferably, the girder should be bolted to the cap plate outside of the column flanges. The column cap plate should be extended outside of the column flange with the bolts to the girder placed outside of the column flanges. The column cap plate should not be made overly thick, as this detail requires the cap plate to distort to allow for the end rotation of the girder. The girder-to-cap-plate bolts should be adequate to transfer the tractive or bumper forces to the longitudinal crane bracing. Traction plates between girder webs may be required for large tractive forces or bumper forces.

The engineer should consider using finger tight bolts with upset threads as a means of reducing bolt fatigue in crane column cap plates (Rolfes and Fisher, 2001).

Miscellaneous Attachments

Attachments to crane runway girders should be avoided. AIST TR-13 specifically prohibits welding attachments to the tension flange of runway girders. Brackets to support the runway electrification are often necessary. If the brackets are bolted to the web of the girder, fatigue consequences are relatively minor. However, if the attachment is made with fillet welds to the web, AISC *Specification* Appendix 3, Table A-3.1, Section 7.2, applies. This provision places the detail into Stress Category D or E, depending on the detail. If transverse stiffeners are present, the brackets could be attached to the stiffeners. The girders should be detailed so that the bracket holes are shown to eliminate the need for field drilling.

Chapter 12
Crane-Induced Loads and Load Combinations

It is recommended that the designer show the crane wheel loads, wheel spacing, bumper forces, and the design criteria used to design the structure on the drawings.

Although loading conditions for gravity, wind, and seismic loads are well defined among building codes and standards, crane loading conditions generally are not.

As mentioned previously, crane fatigue loads are primarily a function of the class of service, which in turn is based primarily on the number of cycles of a specific loading case. This classification should be based on the estimated life span, rate of loading, and the number of load repetitions. The owner should specify or approve the classification for all portions of a building. A maximum life span of 50 years is typically acceptable.

The provisions of ASCE/SEI 7-16 and AIST TR-13 for crane runway loads are summarized in the following discussion. ASCE/SEI 7-16 is referenced by the IBC and is a legal requirement. AIST TR-13 is a guideline and can be used for situations not covered by ASCE/SEI 7-16, or when specified by project specifications. In addition, the Metal Building Manufacturers Association (MBMA) *Low-Rise Building Systems Manual* (MBMA, 2012) provides a comprehensive discussion on crane loads.

For LRFD load combinations, ASCE/SEI 7-16 indicates that the live load of a crane is the rated capacity, thus a 1.6 load factor is to be used. No comments are made about appropriate load factors relative to the trolley, hoist, or bridge weight. The author recommends using a 1.2 load factor for the bridge weight and the hoist and trolley weight.

12.1 VERTICAL IMPACT

ASCE/SEI 7-16

ASCE/SEI 7-16 defines the maximum wheel load as "The maximum wheel loads shall be the wheel loads produced by the weight of the bridge, as applicable, plus the sum of the rated capacity and the weight of the trolley with the trolley positioned on its runway at the location where the resulting load effect is maximum." Vertical impact percentages are then multiplied by the maximum wheel loads. The percentage factors contained in ASCE/SEI 7-16 are as follows:

Monorail cranes (powered)	25%
Cab-operated or remotely operated bridge cranes (powered)	25%
Pendant-operated bridge cranes (powered)	10%
Bridge cranes or monorail cranes with hand-geared bridge, trolley, and hoist	0

AIST TR-13

The allowances for vertical impact are specified as 25% of the maximum wheel loads for all crane types, except a 20% impact factor is recommended for motor room maintenance cranes.

In all cases, impact loading should be considered in the design of column brackets regardless of whether ASCE/SEI 7-16 or AIST TR-13 requirements are being used.

12.2 SIDE THRUST

Horizontal forces act on crane runways due to a number of factors including:

1. Runway misalignment
2. Crane skew
3. Trolley acceleration
4. Trolley braking
5. Crane steering

ASCE/SEI 7-16

"The lateral force on crane runway beams with electrically powered trolleys shall be calculated as 20% of the sum of the rated capacity of the crane and the weight of the hoist and trolley. The lateral force shall be assumed to act horizontally at the traction surface on a runway beam, in either direction perpendicular to the beam, and shall be distributed with due regard to the lateral stiffness of the runway beam and supporting structure." ASCE/SEI 7-16 is silent on what load factor to use with the lateral crane forces. The author recommends using a 1.6 factor on the lateral thrust because these loads are not known with the same degree of accuracy as the bridge and hoist weights.

AIST TR-13

AIST TR-13 requires that "The recommended total side thrust shall be distributed with due regard for the lateral stiffness of the structures supporting the rails and shall be the greatest of:

1. That specified in Table 3.2 (shown here as Table 12-1).
2. 20% of the combined weight of the lifted load and trolley. For stacker cranes this factor shall be 40% of the combined weight of the lifted load, trolley, and rigid arm.
3. 10% of the combined weight of the lifted load and

Table 12-1. AIST TR-13 Crane Side Thrusts (AIST, 2003)	
Crane Type	**Total Side Thrust, % of Cap Lifted Load**
Mill cranes	40
Ladle cranes	40
Clamshell bucket and magnet cranes (including slab and billet yard cranes)	100
Soaking pit cranes	100
Stripping cranes	100[a]
Motor room maintenance cranes	30
Stacker cranes (cab-operated)	200
[a] ingot and mold	

Table 12-2. ASCE/SEI-7 vs. AIST TR-13 Side Thrust Comparison		
100T Mill Crane, Trolley Weight = 60,000 lb (Includes Hoist), Entire Crane Weight = 157,000 lb		
Criteria	**Equation (Total Force)**	**Total Force, kips**
ASCE/SEI-7 (ASD)	0.20 (Rated capacity + trolley weight)	52.0
AIST TR-13	(1) 0.40 (lifted load) (2) 0.20 (lifted load + trolley weight) (3) 0.10 (lifted load + entire crane weight)	80.0 52.0 35.7

crane weight. For stacker cranes this factor shall be 15% of the combined weight of the lifted load and the crane weight."

In AIST TR-13, lifted load is defined as "a total weight lifted by the hoist mechanism, including working load, all hooks, lifting beams, magnets or other appurtenances required by the service but excluding the weight of column, ram or other material handling device that is rigidly guided in a vertical direction during hoisting action." For pendant operated cranes, the AIST TR-13 side thrust is taken as 20% of the maximum load on the driving wheels. In most cases, half of the wheels are driving wheels. AIST TR-13 requires that radio-operated cranes be considered as cab-operated cranes with regard to side thrusts.

Table 12-2 is provided to illustrate the variation between ASCE/SEI 7-16 and AIST TR-13 for a particular crane size.

12.3 LONGITUDINAL OR TRACTIVE FORCE

ASCE/SEI 7-16

The longitudinal force on crane runway beams is calculated as 10% of the maximum wheel loads of the crane. ASCE/SEI 7-16 excludes bridge cranes with hand-geared bridges from this requirement; thus, the author presumes that it is ASCE's position that tractive forces are not required for hand-geared bridge cranes. It is further stated in ASCE/SEI 7-16 that the longitudinal force shall be assumed to act horizontally at the traction surface of a runway beam in either direction parallel to the beam. ASCE is silent on the LRFD load factor for the longitudinal force. The author recommends using 1.6.

AIST TR-13

The tractive force is taken as 20% of the maximum load on driving wheels.

12.4 CRANE STOP FORCES

The magnitude of the bumper force is dependent on the energy absorbing device used in the crane bumper. The device may be linear such as a coil spring or nonlinear such as hydraulic bumpers. See Section 14.6 for additional information on the design of the runway stop.

The crane stop, crane bracing, and all members and their connections that transfer the bumper force to the ground should be designed for the bumper force. It is recommended that the designer indicate on the structural drawings the magnitude of the bumper force assumed in the design. The bumper force is typically specified by the owner or crane supplier.

12.5 ECCENTRICITIES

The bending of the column due to eccentricity of the crane girder on the column seat must be investigated. The critical bending for this case may occur when the crane is not centered over the column but located just to one side as illustrated in Figure 12-1. Eccentricity of the rail to the girder centerline should also be considered in the design. Under this condition, the vertical wheel loads induce torsion on the girder that is typically resolved into a force couple on the top and bottom flanges for design. See Chapter 15 for suggested tolerances for alignment of rail and girder centerlines.

12.6 SEISMIC LOADS

Although cranes do not induce seismic loads on a structure, the crane weight should be considered in seismic load determination. The seismic mass of cranes and trolleys that lift a suspended load need include only the empty weight of the equipment. The designer should carefully evaluate the location of the cranes within the building in the seismic analysis. Where appropriate, a site investigation should be performed in order to determine the soil profile type for seismic response. Seismic response interaction between the crane and the building should be taken into account.

Special consideration should also be given to design requirements beyond those specified in the building code for buildings, structures, and equipment that must remain serviceable immediately after a design level earthquake. This may include the examination of vertical accelerations and their effect on the crane's ability to not "bounce" off the runway during a seismic event. Also, the designer is cautioned to verify seismic limitations that may be imposed on the structural system, and to determine the need for special detailing requirements based on the Seismic Design Category.

12.7 LOAD COMBINATIONS

In addition to the applicable building code, the owner may require conformance with AIST TR-13. However, if AIST TR-13 is not specified, the designer should consider the use of the structure in determining the criteria for the design. Building codes may not contain information on how to combine the various crane loads—that is, which crane loads and how many cranes should be considered loaded at one time—but typically they do address how crane loads should be combined with wind, snow, live, seismic, and other loads.

For one crane, each span must be designed for the most severe loading conditions with the crane in the worst position for each element that is affected. As mentioned, when more than one crane is involved in making a lift, most codes are silent on a defined procedure. Engineering judgment on the specific application must be used.

The author recommends the following provisions for the design of members subject to crane lifts. These provisions are applicable to the design of supporting elements and are consistent with those currently proposed for the next edition of AIST TR-13, which is expected to be published in 2020.

3.10.2.1. LRFD Load Combinations

1. $1.4D$
   - 1a. $1.4D+1.4C_{dm}$
2. $1.2D+1.6L+0.5(L_r \text{ or } S \text{ or } R)$
   - 2a. $1.2(D+C_{dm})+1.6L+1.0(C_{vm}+C_{ss}+C_{ls})+0.5(L_r \text{ or } S \text{ or } R)$
   - 2b. $1.2(D+C_{dm})+1.0(C_{vm}+C_{ss}+C_{ls})+L+0.5(L_r \text{ or } S \text{ or } R)$

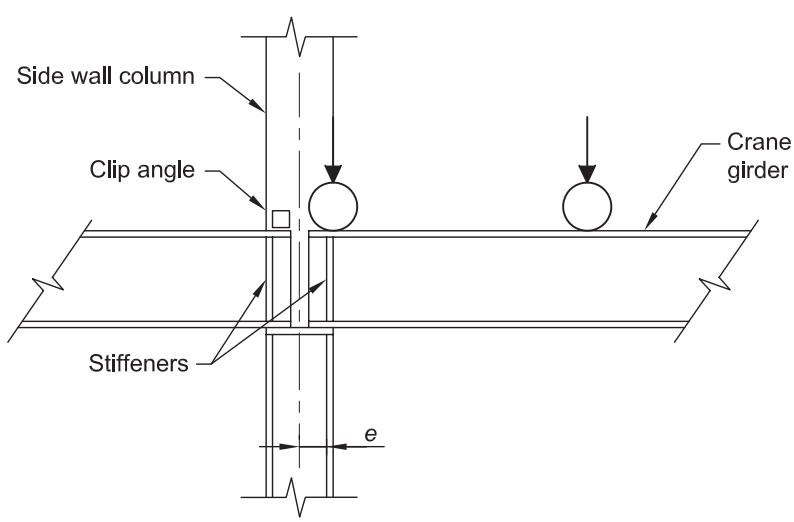

Fig.12-1. Possible critical crane location.

2c. $1.2(D+C_{ds})+1.6(C_{vs}+C_l+C_{ls})+L+0.5(L_r \text{ or } S \text{ or } R)$

3. $1.2D+1.6(L_r \text{ or } S \text{ or } R)+(L \text{ or } 0.5W)$

3a. $1.2(D+C_{dm})+1.6(L_r \text{ or } S \text{ or } R)+1.0(C_{vm}+C_{ss}+C_{ls})+(L \text{ or } 0.5W)$

4. $1.2D+1.0W+L+0.5(L_r \text{ or } S \text{ or } R)$

4a. $1.2D+1.2C_{dm}+1.0W+L+C_{vm}+0.5(L_r \text{ or } S \text{ or } R)$

5. $1.2D+1.0E+L+0.2S$

5a. $1.2D+1.2C_{dm}+1.0E+C_{vm}+L+0.2S$

6. $0.9D+1.0W$

7. $0.9D+1.0E$

7a. $0.9D+C_{dm}(\text{or } C_{ds})+1.0E$

8. $1.2D+1.2C_{ds}+1.0C_{vs}+1.0C_{bs}$

9. $0.9(D+C_{ds})+1.6C_{vs(min)}+1.6C_{ss}$

10. $0.9(D+C_{ds})+1.6C_{ls} \text{ or } 1.0C_b$

3.10.2.2. ASD Load Combinations

1. D

1a. $D+C_{dm}$

2. $D+L$

2a. $D+C_{dm}+C_{vm}+C_{ss}+C_{ls}+L$

2b. $D+C_{ds}+C_{vs}+C_{ls}+C_i+L$

3. $D+(L_r \text{ or } S \text{ or } R)$

3a. $D+C_{dm}+(L_r \text{ or } S \text{ or } R)$

4. $D+0.75[L+(L_r \text{ or } S \text{ or } R)]$

4a. $D+C_{dm}+0.75[C_{vm}+C_{ss}+C_{ls}+L+(L_r \text{ or } S \text{ or } R)]$

4b. $D+C_{ds}+0.75[C_{vs}+C_i+C_{ls}+L+(L_r \text{ or } S \text{ or } R)]$

5. $D+(0.6W \text{ or } 0.7E)$

5a. $D+C_{dm}+(0.6W \text{ or } 0.7E)$

6a$_1$. $D+0.75[L+0.6W+(L_r \text{ or } S \text{ or } R)]$

6a$_2$. $D+0.75[C_{dm}+C_{vm}+L+0.6W+(L_r \text{ or } S \text{ or } R)]$

6a$_3$. $D+0.75[C_{dm}+C_{vm}+C_{ss}+C_{ls}+0.3W+(L_r \text{ or } S \text{ or } R)]$

6b$_1$. $D+0.75[L+0.7E+S]$

6b$_2$. $D+0.75[C_{dm}+C_{vm}+L+0.7E+S]$

7. $0.6D+0.6W$

8. $0.6D+C_{dm}(\text{or } C_{ds})+0.7E$

9. $D+C_{ds}+C_{vs}+0.67C_{bs}$

10. $0.6(D+C_{ds}+C_{vs(min)})+C_{ss}$

11. $0.6(D+C_{ds}+C_{vs})+(C_{ls} \text{ or } 0.67C_{bs})$

3.10.2.3. Fatigue

For purposes of fatigue design, crane loads to be considered are (C_{ds}+C_{vs}+0.5C_{ss}). The number of cycles used as the basis for fatigue design shall be consistent with the building classification covered in Section 1.4. The owner shall designate an increase in the estimated number of load repetitions for any portion of the building structure for which the projected work load or possible changes in building usage warrants.

The variables as defined in AIST TR-13, Section 3.10.1. are:

C = crane load (see specific crane load identifications in the next paragraph)
D = dead load
E = earthquake load
L = live load
L_r = roof live load
R = rain load
S = snow load
W = wind load

Individual crane loads referenced in the load combinations in the preceding text are as follows:

C_{bs} = crane bumper force
C_{ds} = crane dead load for a single crane with crane trolley positioned to produce the maximum load effect for the element in consideration; crane dead load includes weight of the crane bridge, end trucks, and trolley
C_{dm} = crane dead load for multiple cranes with crane bridges and crane trolleys positioned to produce the maximum load effect for the element in consideration
C_i = Crane vertical impact forces due to a single crane in one aisle only
C_{ls} = longitudinal crane tractive loads from a single crane
C_{ss} = crane side thrust from a single crane
C_{vm} = crane lifted load for multiple cranes with the crane bridges and crane trolleys positioned to produce the maximum load effect for the element in consideration
C_{vs} = crane lifted load for a single crane with crane trolley positioned to produce the maximum load effect for the element in consideration
$C_{vs(min)}$ = crane lifted load for a single crane in one isle only with crane trolley positioned to produce the minimum load effect for the element in consideration

Chapter 13
Structural Systems in Crane Buildings

13.1 ROOF SYSTEMS

The inclusion of cranes in an industrial building will typically not affect the basic roof covering system. Crane buildings will "move," and any aspect in the roof system that might be affected by such a movement must be carefully evaluated. This means close examination of details (e.g., flashings, joints, etc.).

A difference in the roof support system design for crane buildings, as opposed to industrial buildings without cranes, is that a roof diaphragm system should only be used after careful consideration of localized forces that may be imparted into the diaphragm from the crane forces. Whereas wind loads apply rather uniformly distributed forces to the diaphragm, cranes forces are localized and cause concentrated repetitive forces to be transferred from the frame to the diaphragm. These concentrated loads combined with the cyclical nature of the crane loads (fatigue) should be carefully examined before selecting a roof diaphragm solution.

13.2 WALL SYSTEMS

The special consideration that must be given to wall systems of crane buildings relates to movement and vibration. Columns are commonly tied to the wall system to provide bracing to the column or to have the column support the wall. (The latter is applicable only to lightly loaded columns.) For masonry and concrete wall systems, it is essential that proper detailing be used to tie the column to the wall. Figure 13-1 illustrates a detail that has worked well for masonry walls. The bent anchor rod has flexibility to permit movement perpendicular to the wall but is "stiff" parallel to the wall, enabling the wall to brace the column about its weak axis. If a rigid connection is made between the column and the wall and crane movements and vibrations are not accounted for, wall distress is inevitable. The use of the wall as a lateral bracing system for columns should be avoided if future expansion is anticipated.

13.3 FRAMING SYSTEMS

The same general comments given previously for industrial buildings without cranes apply to crane buildings as well. However, the most economical framing schemes are normally dictated by the crane. Optimum bays are usually smaller for crane buildings than buildings without cranes and typically fall into the 25- to 30-ft range. This bay size permits the use of rolled shapes as crane runways for lower load crane sizes. Larger main bay sizes of 50 to 60 ft that utilize wind columns is more economical when deep foundations and heavy cranes are specified.

The design of framing in crane buildings must include certain serviceability considerations that are used to control relative and absolute lateral movements of the runways by controlling the frame and bracing stiffness. The source producing lateral movement is either an external lateral load (wind or earthquake) or the lateral load induced by the operation of the crane. The criteria are different for pendant-operated versus cab-operated cranes because the operator rides with the crane in the latter case. In crane bays with gabled roofs, vertical roof load can cause spreading of the eaves and thus spreading of the crane runways. Conversely, eccentrically bracketed runways supported on building columns can result in inward tilting of the columns due to the crane loading. This would cause an inward movement of the runways toward each other. Lastly, the crane tractive force can cause longitudinal movement of the runway either by

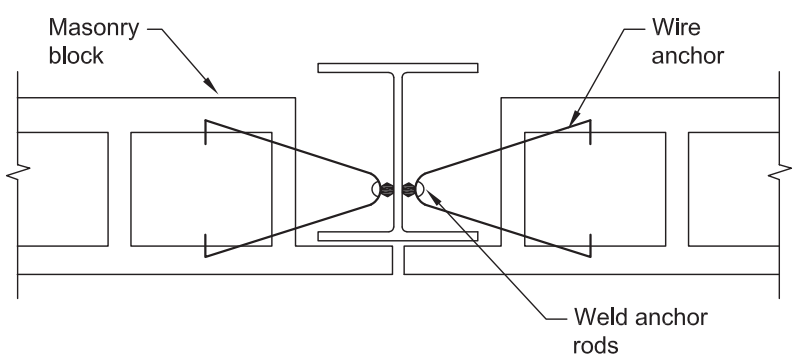

Fig. 13-1. Masonry wall anchorage.

torsion in the supporting columns where brackets are used or flexing of the frame if rigid frame bents are used for the runway columns. Longitudinal runway movement is rarely a problem where braced frames are used.

Recommended serviceability limits for frames supporting cranes (West et al., 2003):

1. *Pendant-operated cranes*: The frame drift should be less than the runway height over 100 based on 10-year winds or the crane lateral loads on the bare frame. While this limit has produced satisfactory behavior, the range of movements should be presented to the building owner for review because they may be perceived as too large in the completed building.
2. *Cab-operated cranes*: The frame drift should be less than the runway height over 240 and less than 2 in. based on 10-year wind or the crane lateral loads on the bare frame.
3. *All top-running cranes*: The relative inward movement of runways toward each other should be less than a ½-in. shortening of the runway-to-runway dimension. This displacement would be due to crane vertical static load. Relative outward movement of runways away from each other should not be more than an increase of 1 in. in the dimension between crane runways. The loading inducing this displacement would vary depending on the building location. In areas of roof snow load less than 12 psf, no snow load need be taken for this serviceability check. In areas of roof snow load between 12 psf and 30 psf, it is suggested that 50% of the roof snow load should be used. Lastly, in areas where the snow load exceeds 30 psf, 75% of the roof snow loads should be used.

The discussion of serviceability limits is also presented in more detail in AISC Design Guide 3.

In addition to the preceding serviceability criteria, it is recommended that office areas associated with crane buildings should be isolated from the crane building so vibration and noise from the cranes is minimized in the office areas.

13.4 BRACING SYSTEMS

13.4.1 Roof Bracing

Roof bracing is very important in the design of crane buildings. The roof bracing allows the lateral crane forces to be shared by adjacent bents. This sharing of lateral load reduces the column moments in the loaded bents. This is true for all framing schemes (i.e., rigid frames of shapes, plates, and trusses, or braced frames). It should be noted, however, that in the case of rigid-frame structures, the moments in the frame cannot be reduced to less than the wind-induced moments.

Figures 13-2, 13-3, and 13-4 illustrate the concept of using roof bracing to induce sharing of lateral crane loads in the columns. For wind loading, all frames and columns are displaced uniformly as shown in Figure 13-2. For a crane building without roof bracing, the lateral crane loads are transmitted to one frame line (Figure 13-3), causing significant differential displacement between frames. The addition of roof bracing will create load sharing. Columns adjacent to the loaded frame will share in the load, thus reducing differential and overall displacement (Figure 13-4). Angles or tees will normally provide the required stiffness for this system. Additional information on load sharing is available in Chapter 16.

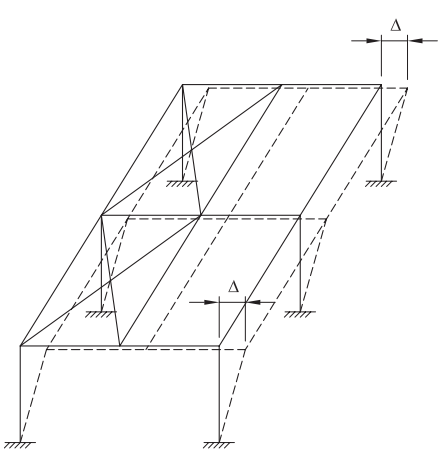

Fig. 13-2. Uniform displacement due to wind.

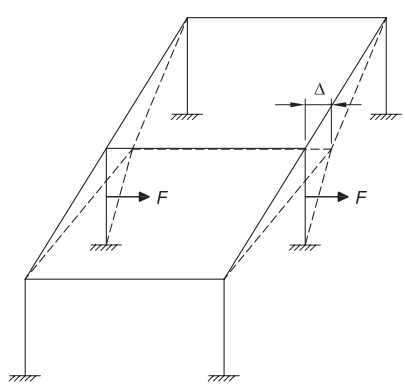

Fig. 13-3. Displacement of unbraced frames due to crane lateral loads.

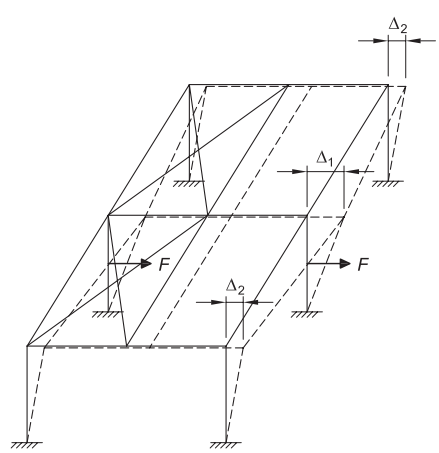

Fig. 13-4. Displacement of braced frames due to crane lateral loads.

13.4.2 Wall Bracing

It is important to trace the longitudinal crane forces through the structure in order to ensure proper wall and crane bracing (wall bracing for wind and crane bracing may, in fact, be the same braces).

For lightly loaded cranes, wind bracing in the plane of the wall may be adequate for resisting longitudinal crane forces, as shown in Figure 13-5. For large longitudinal forces, the bracing will likely be required to be located in the plane of the crane rails, as shown in Figure 13-6.

For the bracing arrangement shown in Figure 13-5, the crane longitudinal force line is eccentric to the plane of the X-bracing. The crane column may tend to twist if the horizontal truss is not provided. Such twisting will induce additional stresses in the column. The designer should calculate the stresses due to the effects of the twisting and add these stresses to the column axial and flexural stresses. A torsional analysis can be performed to determine the stresses caused by twist, or as a conservative approximation, the stresses can be determined by assuming that the twist is resolved into a force couple in the column flanges as shown in Figure 13-7. The bending stresses in the flanges can be calculated from the flange forces. In order to transfer the twist force, Pe, into the two flanges, stiffeners may be required at the location of the force, P.

The following criteria will typically define the longitudinal crane force transfer:

1. For small longitudinal loads (up to 4 kips), use of wind bracing is typically efficient where columns are designed for the induced eccentric load.
2. For medium longitudinal loads (4 kips to 8 kips), a horizontal truss is typically required to transfer the force to the plane of X-bracing.
3. For large longitudinal loads (more than 8 kips), bracing in the plane of the longitudinal force is typically the most effective method of bracing. Separate wind X-bracing on braced frames may be required due to eccentricities.

Normally the X-bracing schemes resisting these horizontal crane forces are best provided by angles or tees rather than rods. In cases where aisles must remain open, portal type bracing may be required in lieu of designing the column for weak axis bending, as shown in Figure 13-8.

It should be noted that portal bracing will necessitate a special design for the horizontal (girder) member, and the diagonals will take a large percentage of the vertical crane forces. This system should only be used for lightly loaded, low-fatigue situations. The system shown in Figure 13-9 could be used as an alternate to Figure 13-8. Additional details on connections and bracing can be found in the AISC *Manual*.

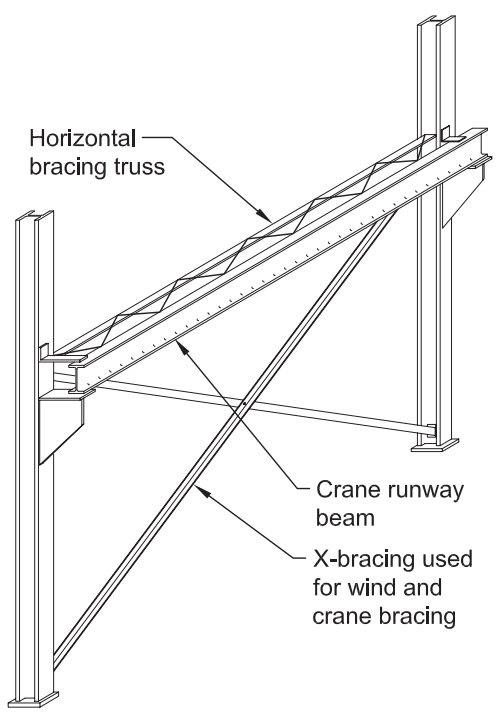

Fig. 13-5. Wall bracing for cranes.

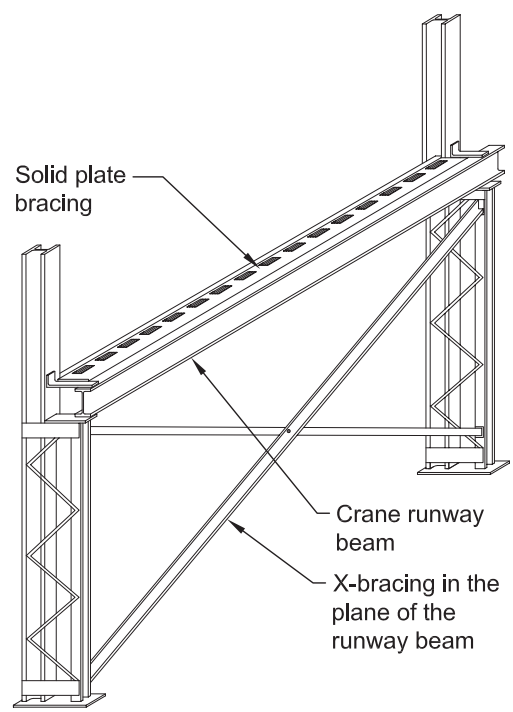

Fig. 13-6. Vertical bracing for heavy cranes.

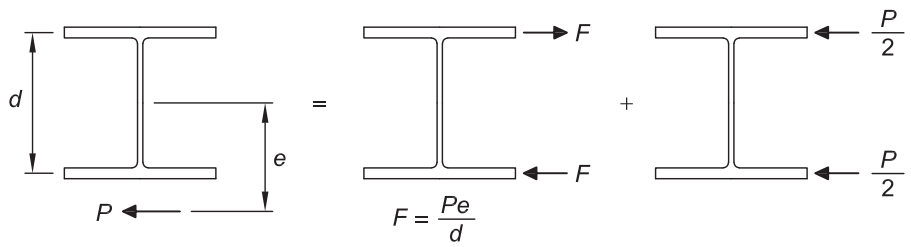

Fig. 13-7. Eccentric column forces.

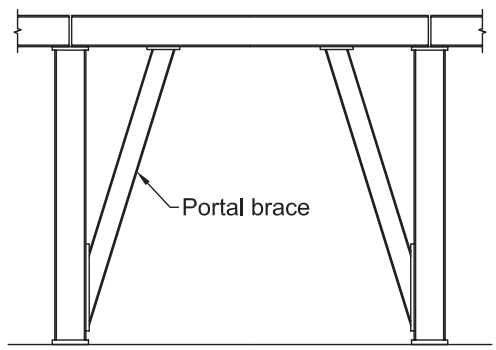

Fig. 13-8. Portal crane runway bracing.

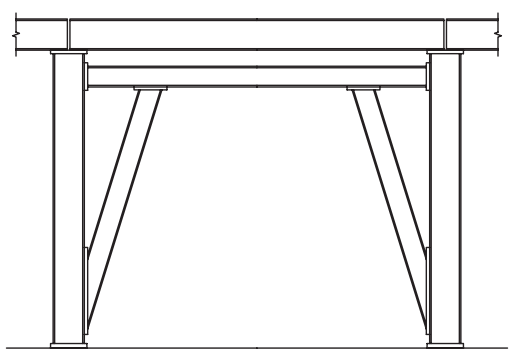

Fig. 13-9. Modified portal crane runway bracing.

Chapter 14
Crane Runway Design

Strength considerations for crane girder design are primarily controlled by fatigue for CMAA 70 Class E and F cranes and, to some degree, for Class D cranes. Wheel loads, wheel spacing, and girder span are required for the design of crane girders. The expense of crane girder construction typically increases when built-up shapes are required. Fatigue restrictions are more severe for built-up shapes. The difference between a rolled shape versus a built-up member using continuous fillet welds is a reduction in the allowable fatigue stress.

The following summary of crane girder selection criteria may prove helpful.

1. *Light cranes and short spans*: Use a wide-flange beam.
2. *Medium cranes and moderate spans*: Use a wide-flange beam, and if required, reinforce the top flange with a channel or angles.
3. *Heavy cranes and longer spans*: Use a plate girder with a horizontal truss or solid plate at the top flange.
4. *Limit deflections under crane loads as follows* (West et al., 2003):

   Vertical deflection of the crane beam due to wheel loads (no impact)

   - $L/600$ for light and medium cranes: CMAA 70 Classes A, B, and C
   - $L/800$ for light and medium cranes: CMAA 70 Class D
   - $L/1000$ for mill cranes: CMAA 70 Classes E and F

   Lateral deflection of the crane beam due to crane lateral loads

   - $L/400$ for all cranes

14.1 CRANE RUNWAY BEAM DESIGN PROCEDURE

As previously explained, crane runway beams are subjected to both vertical and horizontal forces from the supported crane system. Consequently, crane runway beams must be designed for combined bending about both the x and y axis.

Salmon et al. (2008) and Gaylord et al. (1991) point out that the equations presented in the AISC *Specification* for lateral-torsional buckling strength are based upon the load being applied at the elevation of the neutral axis of the beam. If the load is applied above the neutral axis (for instance, at the top flange of the beam as is the case with crane runway beams), lateral-torsional buckling resistance is reduced. The lateral loads from the crane system applied at the top flange level also generate a twisting moment on the beam. When vertical and lateral loads are applied simultaneously, these two effects are cumulative. To compensate for this, it is common practice to assume the lateral loads due to the twisting moment are resisted by only the top flange. With this assumption, Salmon et al. and Gaylord et al. both suggest that the lateral stability of a beam of this type subject to biaxial bending is otherwise typically not affected by the weak-axis bending moment, M_y. Examples provided by these references are for relatively short beam lengths. In the earlier editions of this Design Guide, the procedure recommended by Salmon et al. and Gaylord et al. was used for combined loading; however, the author is not aware of any significant research on this procedure for runway girders with varieties of shapes and spans and thus recommends that the AISC *Specification* axial load and bending moment interaction equations be used.

Another criterion related to crane runway beam design referred to in AISC *Specification* Section J10.4 is web sidesway buckling. This criterion is included to prevent buckling in the tension flange of a beam where flanges are not restrained by bracing or stiffeners and are subject to concentrated loads. This failure mode may be predominant when the compression flange is braced at closer intervals than the tension flange or when a monosymmetric section is used with the compression flange larger than the tension flange (e.g., wide-flange beam with a cap channel). A maximum concentrated load is used as the limiting criterion for this buckling mode.

This criterion does not currently address beams subjected to simultaneously applied multiple wheel loads. The author is not aware of any reported problems with runway beams that are designed using these criteria with a single wheel load.

For crane runway beams, the following design procedure is recommended as both safe and reasonable where fatigue is not a factor. See Example 14.1.1 for ASD and Example 14.1.2 for LRFD.

1. Compute the required moments of inertia, I_x and I_y, to satisfy deflection criteria: $L/600$ to $L/1{,}000$ for vertical deflection and $L/400$ for lateral deflection.

2. Position the crane to produce the worst loading condition. This can be accomplished using the equations found in AISC *Manual* Part 3 for cranes with two-wheel end trucks on simple spans. For other wheel arrangements, the maximum moment can be obtained by locating the wheels so that the center of the span is midway between the resultant of the loads and the nearest wheel to the resultant. The maximum moment will occur at the wheel nearest to the centerline of the span. For continuous spans, the maximum moment determination is a trial and error procedure. Use of a computer for this process is recommended.
3. Calculate the required bending moments, M_{rx} and M_{ry}, including the effects of impact. Many engineers determine M_{ry} by applying the lateral crane forces to the top flange of the runway beam. AIST TR-13 requires that the lateral force be increased because the force is applied to the top of the rail. This eccentricity of lateral load increases the magnitude of the lateral force to the top flange and requires consideration of a corresponding bottom flange lateral force and bending moment in the opposite direction.
4. For sections without cap channels, select a trial section ignoring lateral load.
5. To account for the weak-axis effects, select a section with wide flanges and several sizes larger than provided by M_{rx} alone. For sections with cap channels, the Appendix tables may be of assistance. If ASTM A36 cap channels are used on ASTM A992 steel beams, then lateral-torsional buckling requirements must be based on the ASTM A36 material, as well as the weak axis strength.
6. Traditionally, Equations 14-1a and 14-1b have been used to determine the strength of runway girders. The author recommends that these be used when the AIST TR-13 requirements are not specified.

$$\frac{M_{rx}}{M_{nx}/\Omega_b}+\frac{M_{ry}}{M_{ny}/\Omega_b}\leq 1.0 \text{ (ASD)} \qquad (14\text{-}1a)$$

$$\frac{M_{rx}}{\phi_b M_{nx}}+\frac{M_{ry}}{\phi_b M_{ny}}\leq 1.0 \text{ (LRFD)} \qquad (14\text{-}1b)$$

where

M_{nx}, M_{ny} = nominal moments about the x- and y-axis, respectively, kip-in.

M_{ny} = nominal moment based on the top-flange area of the section about the y-axis. For sections with cap channels, M_{ny} is the nominal moment based on the channel and top-flange area, kip-in.

ϕ_b = 0.90

Ω_b = 1.67

When designing the runway girder for bending about the x-axis only, include the impact in the calculation for M_{rx}.

For assistance in calculations, listed in Appendix Table A-1 are the following:

I_t = moment of inertia of the top flange and cap channel about the y-axis of the combined section, in.^{4}

I_x = moment of inertia about the x-axis of the combined section, in.^{4}

S_{yt} = elastic section modulus of the top flange and cap channel about the y-axis of the combined section, in.^{3}

S_1 = elastic section modulus referred to the tension flange of the combined section, in.^{3}

S_2 = elastic section modulus referred to the compression flange of the combined section, in.^{3}

Z_{yt} = plastic section modulus of the top flange and cap channel about the y-axis of the combined section, in.^{3}

Z_x = plastic section modulus about the x-axis, in.^{3}

y_1 = distance from the bottom flange to the section centroid, in.

7. Check the section with respect to web sidesway buckling as described in AISC *Specification* Section J10.4.
8. When cap channels are used, design the weld connecting the channel to the flange.

In this procedure, the checks do not incorporate the force in the runway beam due to the longitudinal tractive force. ASCE/SEI 7-16 does not provide load combinations specifically for the runway force combinations; however, as noted in the preceding text, AIST TR-13 does include two load cases that incorporate the longitudinal tractive force. Typically, the longitudinal force in the runway beam can be checked based on the full cross-sectional area of the beam. In the majority of cases, the required force divided by the available strength level is so low that it can be neglected.

In selecting a trial rolled-shape section, it may be helpful to recognize that the ratios shown in Table 14-1 exist for various W-shapes without cap channels.

For assistance in calculating the lateral-torsional buckling strength for sections with cap channels, listed in Appendix Table A-2 are the following:

F_L = magnitude of flexural stress in compression flange at which flange local buckling or lateral-torsional buckling is influenced by yielding, ksi

Table 14-1. $\frac{Z_x}{Z_y}$ Ratios for W-Shapes	
W-Shape	$\frac{Z_x}{Z_y}$
W8 through W16	3 to 8
W16 through W24	5 to 10
W24 through W36	7 to 12

L_p = limiting unbraced length for the limit state of yielding, in.

L_r = limiting unbraced length for the limit state of inelastic lateral-torsional buckling, in.

h_o = distance between the flange centroids, in.

r_t = radius of gyration of the top flange and channel about the y-axis of the combined section, in.

When fatigue is a consideration, the procedure should be altered so the live load stress range for the critical case does not exceed the fatigue allowable stress range determined in accordance with AISC *Specification* Appendix 3.

Example 14.1.1—Crane Runway Girder Design Example (ASD)

Given:

Use ASCE/SEI 7-16 to design an ASTM A992 W-shape runway girder for a CMAA Class B crane. Assume no reduction in allowable stress due to fatigue. The design parameters are:

Type of control: cab-operated
Crane capacity = 20 tons (40 kips)
Bridge weight = 57.2 kips
Combined trolley and hoist weight = 10.6 kips
Maximum wheel load (without impact) = 38.1 kips
ASCE 100 lb/yard rail = 34 plf
Combined clamps and electrification weight = 16 plf
Bridge span = 70 ft
Runway girder span = 30 ft
Wheel spacing = 12 ft

Solution:

From AISC *Manual* Table 2-4, the material properties for the girder are:

ASTM A992
$F_y = 50$ ksi
$F_u = 65$ ksi

The critical wheel location with regards to bending moment is shown in Figure 14-1. The wheel location to determine approximate deflection is shown in Figure 14-2.

The required flexural strength of the runway girder is determined using AISC *Manual* Table 3-23, Case 44.

$$a = 12 \text{ ft}$$
$$l = 30 \text{ ft}$$
$$0.586l = 0.586(30 \text{ ft}) = 17.6 \text{ ft}$$

Because $a = 12$ ft < 17.6 ft:

$$M_{max} = \frac{P}{2l}\left(l - \frac{a}{2}\right)^2$$
$$= \frac{P}{2(30\text{ ft})}\left(30\text{ ft} - \frac{12\text{ ft}}{2}\right)^2$$
$$= 9.60P\text{ kip-ft}$$

Calculate the deflection assuming the wheel locations shown in Figure 14-2. Note that this wheel location will slightly underestimate the deflection as compared to a solution based on the wheel locations shown in Figure 14-1. From AISC *Manual* Table 3-23, Case 9, with $a = 9$ ft:

$$\Delta_{max} = \frac{Pa}{24EI}(3l^2 - 4a^2)$$
$$= \frac{P(9\text{ ft})}{24(29{,}000\text{ ksi})(I)}\left[3(30\text{ ft})^2 - 4(9\text{ ft})^2\right](1{,}728\text{ in.}^3/\text{ft}^3)$$
$$= \frac{53.1P}{I}\text{ in.}$$

Vertical Deflection

Using the vertical deflection criterion of $L/600$, the allowable vertical deflection and required x-axis moment of inertia are:

$$\Delta_{allow} = \frac{(30\text{ ft})(12\text{ in./ft})}{600}$$
$$= 0.600\text{ in.}$$

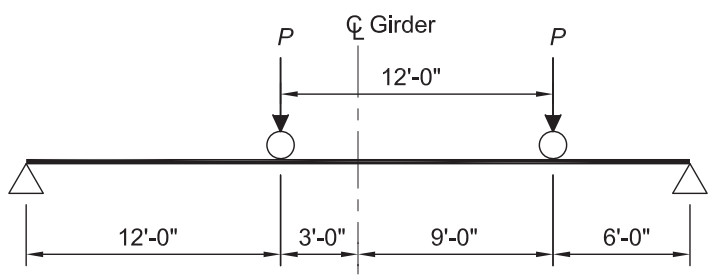

Fig. 14-1. Critical wheel location for bending.

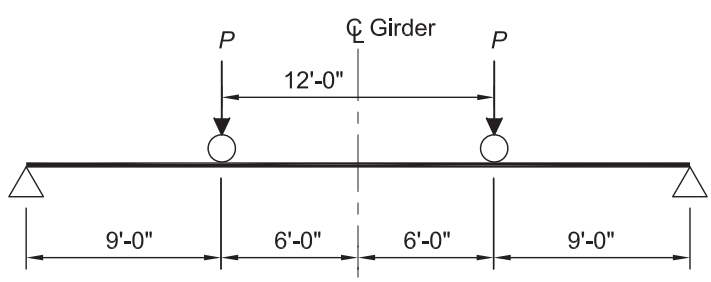

Fig. 14-2. Critical wheel location for approximate deflection.

$$I_{x\ req'd} = \frac{53.1P}{\Delta_{allow}}$$
$$= \frac{53.1(38.1\text{ kips})}{0.600\text{ in.}}$$
$$= 3{,}370\text{ in.}^4$$

AISC *Manual* Table 1-1 is used to select the crane runway girder. Try a W24×131.

$I_x = 4{,}020\text{ in.}^4 > 3{,}370\text{ in.}^4$ **o.k.**

Horizontal Deflection

From ASCE/SEI 7, Section 4.9.4, the lateral force on a crane runway beam with an electrically powered trolley is 20% of the sum of the rated capacity of the crane and the weight of the hoist and trolley. The total lateral load can be distributed equally to the four wheels on the crane. The maximum horizontal load per wheel is:

$$0.20\left(\frac{40\text{ kips} + 10.6\text{ kips}}{4\text{ wheels}}\right) = 2.53\text{ kips}$$

Using horizontal deflection criterion of $L/400$, the allowable horizontal deflection is:

$$\Delta_{allow} = \frac{(30\text{ ft})(12\text{ in./ft})}{400}$$
$$= 0.900\text{ in.}$$

The required y-axis moment of inertia for the top flange, $I_{y\text{-}top\ flg}$, is:

$$I_{y\text{-}top\ flg} = \frac{53.1P}{\Delta_{allow}}$$
$$= \frac{53.1(2.53\text{ kips})}{0.900\text{ in.}}$$
$$= 149\text{ in.}^4$$

And the required y-axis moment of inertia for the entire section is:

$$I_{y\text{-}req'd} = 2I_{y\text{-}top\ flg}$$
$$= 2(149\text{ in.}^4)$$
$$= 298\text{ in.}^4$$

From AISC *Manual* Table 1-1, for a W24×131:

$I_y = 340\text{ in.}^4 > 298\text{ in.}^4$ **o.k.**

Flexural Strength

Calculate the required x- and y-axis flexural strength, M_{rx} and M_{ry}.

The combined weight of the rail, clamps, and electrification is:

$$(34\text{ plf} + 16\text{ plf})(1\text{ kip}/1{,}000\text{ lb}) = 0.050\text{ kip/ft}$$

The girder self-weight is:

$$(131 \text{ plf})(1 \text{ kip}/1{,}000 \text{ lb}) = 0.131 \text{ kip/ft}$$

For x-axis bending acting alone, the impact factor of 1.25 is applied to the crane wheel load, and the required x-axis flexural strength is:

$$\begin{aligned} M_{rx} &= 9.60(38.1 \text{ kips})(1.25) + \frac{(0.050 \text{ kip/ft} + 0.131 \text{ kip/ft})(30 \text{ ft})^2}{8} \\ &= 478 \text{ kip-ft} \end{aligned}$$

For x-axis bending acting in combination with lateral thrust (no impact):

$$\begin{aligned} M_{rx} &= 9.60(38.1 \text{ kips}) + \frac{(0.050 \text{ kip/ft} + 0.131 \text{ kip/ft})(30 \text{ ft})^2}{8} \\ &= 386 \text{ kip-ft} \end{aligned}$$

The required y-axis flexural strength is:

$$\begin{aligned} M_{ry} &= 9.60(2.53 \text{ kips}) \\ &= 24.3 \text{ kip-ft} \end{aligned}$$

From AISC *Manual* Table 6-2, the available x-axis flexural strength for a W24×131 with $L_c = 30$ ft is:

$$\frac{M_{nx}}{\Omega_b} = 605 \text{ kip-ft}$$

Tension Flange Combined Loading

Combined loading on the tension flange is checked using Equation 14-1a:

$$\begin{aligned} \frac{M_{rx}}{M_{nx}/\Omega_b} + \frac{M_{ry}}{M_{ny}/\Omega_b} &= \frac{478 \text{ kip-ft}}{605 \text{ kip-ft}} + 0 \\ &= 0.790 < 1.0 \quad \textbf{o.k.} \end{aligned} \tag{14-1a}$$

Compression Flange Combined Loading

From the AISC *Manual* Table 6-2, the available flexural strength about the y-axis is:

$$\frac{M_{ny}}{\Omega_b} = 203 \text{ kip-ft}$$

Combined loading on the compression flange is checked using Equation 14-1a:

$$\begin{aligned} \frac{M_{rx}}{M_{nx}/\Omega_b} + \frac{M_{ry}}{M_{ny}/\Omega_b} &= \frac{386 \text{ kip-ft}}{605 \text{ kip-ft}} + \frac{24.3 \text{ kip-ft}}{203 \text{ kip-ft}} \\ &= 0.758 < 1.0 \quad \textbf{o.k.} \end{aligned} \tag{14-1a}$$

Web Sidesway Buckling

From AISC *Manual* Table 1-1, the geometric properties for a W24×131 are:

$S_y = 53.0 \text{ in.}^3$
$b_f = 12.9 \text{ in.}$
$t_f = 0.960 \text{ in.}$
$t_w = 0.605 \text{ in.}$
$h/t_w = 35.6$

The clear distance between flanges less the corner radius is:

$$\begin{aligned} h &= t_w\left(h/t_w\right) \\ &= (0.605 \text{ in.})(35.6) \\ &= 21.5 \text{ in.} \end{aligned}$$

The largest unbraced length of either flange at the point of load is:

$$\begin{aligned} L_b &= (30 \text{ ft})(12 \text{ in./ft}) \\ &= 360 \text{ in.} \end{aligned}$$

Because the compression flange is not restrained against rotation, AISC *Specification* Section J10.4(b) is used to determine the nominal strength of the web for the limit state of web sidesway buckling:

$$\begin{aligned} \frac{h/t_w}{L_b/b_f} &= \frac{35.6}{(360 \text{ in.}/12.9 \text{ in.})} \\ &= 1.28 \end{aligned}$$

Because $\dfrac{h/t_w}{L_b/b_f} < 1.7$, AISC *Specification* Equation J10-7 is applicable:

$$R_n = \frac{C_r t_w^3 t_f}{h^2}\left[0.4\left(\frac{h/t_w}{L_b/b_f}\right)^3\right] \qquad (\textit{Spec.}\text{ Eq. J10-7})$$

where

C_r = 960,000 ksi when $1.5M_a < M_y$; otherwise, C_r = 480,000 ksi
M_a = required flexural strength using ASD load combinations, kip-in.
M_y = yield moment, kip-in.

$$\begin{aligned} &= F_y S_y \\ &= (50 \text{ ksi})(53.0 \text{ in.}^3) \\ &= 2{,}650 \text{ kip-in.} \end{aligned}$$

$$\begin{aligned} 1.5M_a &= 1.5(478 \text{ kip-ft})(12 \text{ in./ft}) \\ &= 8{,}600 \text{ kip-in.} \end{aligned}$$

Because $1.5M_a > M_y$, C_r = 480,000 ksi.

The nominal strength is:

$$\begin{aligned} R_n &= \frac{(480{,}000 \text{ ksi})(0.605 \text{ in.})^3(0.960 \text{ in.})}{(21.5 \text{ in.})^2}\left[0.4(1.28)^3\right] \\ &= 185 \text{ kips} \end{aligned}$$

And the available strength is then:

$$\Omega = 1.76$$

$$\frac{R_n}{\Omega} = \frac{185 \text{ kips}}{1.76}$$

$$= 105 \text{ kips}$$

The maximum wheel load with impact is:

$$(38.1 \text{ kips})(1.25) = 47.6 \text{ kips}$$

$$47.6 \text{ kips} < 105 \text{ kips} \quad \textbf{o.k.}$$

Example 14.1.2—Crane Runway Girder Design Example (LRFD)

Given:

Repeat Example 14.1.1 for LRFD. The design parameters are found in Example 14.1.1.

Solution:

From AISC *Manual* Table 2-4, the material properties for the girder are:

ASTM A992
$F_y = 50$ ksi
$F_u = 65$ ksi

The LRFD load factors for crane loads are determined from ASCE/SEI 7-16.

Bridge weight: load factor = 1.2
Trolley and hoist weight: load factor = 1.2
Beam self-weight and crane rail weight: load factor = 1.2
Lifted load: load factor = 1.6
Lateral thrust: load factor = 1.6

Factored Wheel Loads

Conservatively assume that the trolley, hoist, and lifted load act over the runway beam. Because different load factors are applied to the bridge, trolley, and hoist weights versus the lifted load, one cannot simply multiply the ASD wheel load by 1.6.

The bridge weight is distributed equally to all four wheels, and the trolley and hoist are distributed to two wheels. The factored loads per wheel are:

$$P_{dead} = 1.2\left(\frac{P_{bridge}}{4} + \frac{P_{trolley+hoist}}{2}\right)$$

$$= 1.2\left(\frac{57.2 \text{ kips}}{4} + \frac{10.6 \text{ kips}}{2}\right)$$

$$= 23.5 \text{ kips}$$

$$P_{lifted\ load} = 1.6\left(\frac{40 \text{ kips}}{2}\right)$$

$$= 32.0 \text{ kips}$$

And the total factored load per wheel is:

$$P_{total} = 23.5 \text{ kips} + 32.0 \text{ kips}$$

$$= 55.5 \text{ kips}$$

The factored horizontal load per wheel is:

$$H_{factored} = 1.6(0.20)\left(\frac{10.6 \text{ kips} + 40 \text{ kips}}{4}\right)$$
$$= 4.05 \text{ kips}$$

The deflection criteria are the same as calculated for Example 14.1.1.

Flexural Strength

Calculate factored M_x and M_y (include rail, clamps, and electrification).

The combined weight of the rail, clamps, and electrification is:

$$(34 \text{ plf} + 16 \text{ plf})(1 \text{ kip}/1{,}000 \text{ lb}) = 0.050 \text{ kip/ft}$$

The girder self-weight is:

$$(131 \text{ plf})(1 \text{ kip/1,000 lb}) = 0.131 \text{ kip/ft}$$

$$M_{rx} = 9.60(55.5 \text{ kips}) + 1.2\frac{(0.050 \text{ kip/ft} + 0.131 \text{ kip/ft})(30 \text{ ft})^2}{8}$$
$$= 557 \text{ kip-ft}$$

Using an impact factor of 1.25 on the wheel loads from the lifted load, trolley, and hoist:

$$M_{rx} = 9.60(55.5 \text{ kips})(1.25) + 1.2\frac{(0.050 \text{ plf} + 0.131 \text{ plf})(30 \text{ ft})^2}{8}$$
$$= 690 \text{ kip-ft}$$

$$M_{ry} = 9.60(4.05 \text{ kips})$$
$$= 38.9 \text{ kip-ft}$$

From AISC *Manual* Table 6-2, for a W24×131 with $L_c = 30$ ft:

$$\phi_b M_{nx} = 909 \text{ kip-ft}$$

Tension Flange Combined Loading

Combined loading on the tension flange is checked using Equation 14-1b:

$$\frac{M_{rx}}{\phi_b M_{nx}} + \frac{M_{ry}}{\phi_b M_{ny}} = \frac{690 \text{ kip-ft}}{909 \text{ kip-ft}} + 0 \qquad (14\text{-}1b)$$
$$= 0.759 < 1.0 \quad \textbf{o.k.}$$

Compression Flange Combined Loading

From the AISC *Manual* Table 6-2, the available flexural strength about the *y*-axis is:

$$\phi_b M_{ny} = 306 \text{ kip-ft}$$

Combined loading on the compression flange is checked using Equation 14-1b:

$$\frac{M_{rx}}{\phi_b M_{nx}} + \frac{M_{ry}}{\phi_b M_{ny}} = \frac{557 \text{ kip-ft}}{909 \text{ kip-ft}} + \frac{38.9 \text{ kip-ft}}{306 \text{ kip-ft}} \tag{14-1b}$$
$$= 0.740 < 1.0 \quad \textbf{o.k.}$$

Web sidesway buckling calculations are not repeated.

Example 14.1.3—Crane Runway Girder with Cap Channel Design Example (ASD)

Given:

Verify an ASTM A992 W30×99 crane runway girder with an ASTM A36 C15×33.9 cap channel for the design parameters provided in Example 14.1.1. The cap channel is continuously welded to the girder using 70-ksi electrodes. For comparison, use the same dead loads from Example 14.1.1, M_{rx} with impact = 478 kip-ft (5,740 kip-in.), M_{rx} with no impact = 386 kip-ft (4,630 kip-in.), M_{ry} = 24.3 kip-ft (292 kip-in.)

Solution:

From AISC *Manual* Table 2-4, the material properties for the girder and cap channel are:

ASTM A992
F_y = 50 ksi
F_u = 65 ksi

ASTM A36
F_y = 36 ksi
F_u = 58 ksi

From AISC *Manual* Table 1-1, the geometric properties for the W30×99 girder are:

b_f = 10.5 in.
d = 29.7 in.
k_{des} = 1.32 in.
t_f = 0.670 in.
t_w = 0.520 in.
h/t_w = 51.9

From AISC *Manual* Table 1-5, the geometric properties for the C15×33.9 girder are:

A = 10.0 in.^{2}
d = 15.0 in.
t_w = 0.400 in.
$\bar{x}$ = 0.788 in.

From AISC *Manual* Table 1-19, the properties for the combined section W30×99 with C15×33.9 cap channel are:

I_x = 5,550 in.^{4}
S_1 = 300 in.^{3}
S_2 = 481 in.^{3}
Z_x = 408 in.^{3}
y_1 = 18.5 in.

From Appendix Tables A-1 and A-2, the properties of the girder with cap channel are:

F_L = 31.2 ksi
I_t = 380 in.^{4} (for top flange and cap channel)
L_p = 119 in.
L_r = 457 in.

$S_{yt} = 50.6 \text{ in.}^3$
$Z_{yt} = 69.3 \text{ in.}^3$
$h_o = 29.0 \text{ in.}$
$r_t = 4.50 \text{ in.}$

Deflection Criteria

The deflection is checked using the limits calculated in Example 14.1.1.

$I_x = 5{,}550 \text{ in.}^4 > 3{,}370 \text{ in.}^4$ **o.k.**
$I_t = 380 \text{ in.}^4 > 149 \text{ in.}^4$ **o.k.**

The deflection criteria are satisfied.

Flexural Strength

AISC *Specification* Section F5 will be used to check flexural strength limit states in accordance with the User Note in AISC *Specification* Section F4.

Compression Flange Yielding

Compression flange yielding is checked using AISC *Specification* Section F5.1.

$$M_n = R_{pg} F_y S_{xc} \qquad \text{(\textit{Spec}. Eq. F5-1)}$$

Determine the bending strength reduction factor, R_{pg}:

$$R_{pg} = 1 - \frac{a_w}{1{,}200 + 300 a_w}\left(\frac{h_c}{t_w} - 5.7\sqrt{\frac{E}{F_y}}\right) \le 1.0 \qquad \text{(\textit{Spec}. Eq. F5-6)}$$

$$a_w = \frac{h_c t_w}{b_{fc} t_{fc}} \qquad \text{(\textit{Spec}. Eq. F4-12)}$$

$$\begin{aligned} h_c &= 2(d - y_1 - k_{des}) \\ &= 2(29.7 \text{ in.} - 18.5 \text{ in.} - 1.32 \text{ in.}) \\ &= 19.8 \text{ in.} \end{aligned}$$

$b_{fc} = b_f = 15.0$ in. (using the channel depth as b_f)
$t_{fc} = t_f = 0.670$ in.

$$\begin{aligned} a_w &= \frac{(19.8 \text{ in.})(0.520 \text{ in.})}{(15.0 \text{ in.})(0.670 \text{ in.})} \\ &= 1.02 \end{aligned}$$

With the variables known, R_{pg} can be calculated as:

$$\begin{aligned} R_{pg} &= 1 - \frac{1.02}{1{,}200 + 300(1.02)}\left(\frac{19.8 \text{ in.}}{0.520 \text{ in.}} - 5.7\sqrt{\frac{29{,}000 \text{ ksi}}{50 \text{ ksi}}}\right) = 1.07 > 1.0 \\ &= 1.0 \end{aligned}$$

The nominal flexural strength for the limit state of compression flange yielding is:

$$\begin{aligned} M_n &= 1.0(50 \text{ ksi})(481 \text{ in.}^3) \\ &= 24{,}100 \text{ kip-in.} \end{aligned}$$

And the available flexural strength for the limit state of compression flange yielding is:

$$\frac{M_n}{\Omega} = \frac{24{,}100 \text{ kip-in.}}{1.67}$$
$$= 14{,}400 \text{ kip-in.} > M_{rx} = 5{,}740 \text{ kip-in.} \quad \textbf{o.k.}$$

Lateral-Torsional Buckling

AISC *Specification* Section F5.2 is used to determine the nominal flexural strength for the limit state of lateral-torsional buckling.

$$M_n = R_{pg} F_{cr} S_{xc} \qquad (\textit{Spec.}\text{ Eq. F5-2})$$
$$L_b = (30 \text{ ft})(12 \text{ in./ft})$$
$$= 360 \text{ in.}$$
$$L_p = 119 \text{ in.}$$
$$L_r = 457 \text{ in.}$$

Because $L_p < L_b < L_r$, AISC *Specification* Equation F5-3 is applicable:

$$F_{cr} = C_b \left[F_y - (0.3F_y)\left(\frac{L_b - L_p}{L_r - L_p} \right) \right] \le F_y \qquad (\textit{Spec.}\text{ Eq. F5-3})$$
$$= 1.0 \left[50 \text{ ksi} - (0.3)(50 \text{ ksi})\left(\frac{360 \text{ in.} - 119 \text{ in.}}{457 \text{ in.} - 119 \text{ in.}} \right) \right]$$
$$= 39.3 \text{ ksi} < 50 \text{ ksi}$$

The nominal flexural strength for the limit state of lateral-torsional buckling is:

$$M_n = 1.0(39.3 \text{ ksi})(481 \text{ in.}^3)$$
$$= 18{,}900 \text{ kip-in.}$$

And the available flexural strength for the limit state of lateral-torsional buckling is:

$$\frac{M_n}{\Omega} = \frac{18{,}900 \text{ kip-in.}}{1.67}$$
$$= 11{,}300 \text{ kip-in.} > M_{rx} = 5{,}740 \text{ kip-in.} \quad \textbf{o.k.}$$

Flexural Strength of the Top Flange with Lateral Loads

The top flange is compact and thus $M_p = F_y Z_{yt}$, where Z_{yt} is the plastic modulus of the cap channel and the top flange.

$$M_p = (50 \text{ ksi})(69.3 \text{ in.}^3)$$
$$= 3{,}470 \text{ kip-in.}$$

$$\frac{M_p}{\Omega} = \frac{3{,}470 \text{ kip-in.}}{1.67}$$
$$= 2{,}100 \text{ kip-in.}$$

Check Top Flange for Biaxial Bending

$$\frac{M_{rx}}{M_{nx}/\Omega_b}+\frac{M_{ry}}{M_{ny}/\Omega_b}=\frac{4{,}630\text{ kip-in.}}{11{,}300\text{ kip-in.}}+\frac{292\text{ kip-in.}}{2{,}100\text{ kip-in.}} \tag{14-1a}$$
$$=0.55<1.0 \quad \textbf{o.k.}$$

Tension Flange Yielding (including impact)

Because $S_1 < S_2$, AISC *Specification* Equation F5-10 is applicable:

$$M_n = F_y S_1 \qquad (\textit{Spec.}\text{ Eq. F5-10})$$
$$=(50\text{ ksi})(300\text{ in.}^3)$$
$$=15{,}000\text{ kip-in.}$$

$$\frac{M_n}{\Omega}=\frac{15{,}000\text{ kip-in.}}{1.67}$$
$$=8{,}980\text{ kip-in.}>M_{rx}=5{,}740\text{ kip-in.} \quad \textbf{o.k.}$$

Web Sidesway Buckling

The clear distance between flanges less the fillet corner radius is:

$$h=t_w(h/t_w)$$
$$=(0.520\text{ in.})(51.9)$$
$$=27.0\text{ in.}$$

The largest unbraced length of either flange at the point of load is:

$$L_b=360\text{ in.}$$

Because the compression flange is not restrained against rotation, AISC *Specification* Section J10.4(b) is applicable.

$$\frac{(h/t_w)}{(L_b/b_f)}=\frac{51.9}{(360\text{ in.}/10.5\text{ in.})}$$
$$=1.51$$

Because $(h/t_w)/(L_b/b_f) < 1.7$, AISC *Specification* Equation J10-7 is used to determine the nominal strength:

$$R_n=\frac{C_r t_w^3 t_f}{h^2}\left[0.4\left(\frac{h/t_w}{L_b/b_f}\right)^3\right] \qquad (\textit{Spec.}\text{ Eq. J10-7})$$

$$M_y=F_y S_{yt}$$
$$=(50\text{ ksi})(50.6\text{ in.}^3)$$
$$=2{,}530\text{ kip-in.}$$
$$1.5M_a=1.5(478\text{ kip-ft})(12\text{ in./ft})$$
$$=8{,}600\text{ kip-in.}$$

Because $1.5M_a > M_y$, $C_r = 480{,}000$ ksi.

The nominal strength is:

$$R_n = \frac{(480{,}000 \text{ ksi})(0.520 \text{ in.})^3 (0.670 \text{ in.})}{(27.1 \text{ in.})^2}\left[0.4(1.52)^3\right]$$
$$= 86.5 \text{ kips}$$

And the available strength is then:

$$\frac{R_n}{\Omega} = \frac{86.5 \text{ kips}}{1.76}$$
$$= 49.1 \text{ kips}$$

The maximum wheel load with impact is:

$$(38.1 \text{ kips})(1.25) = 47.6 \text{ kips}$$
$$47.6 \text{ kips} > 49.1 \text{ kips} \quad \textbf{o.k.}$$

A W30×99 with a C15×33.9 cap channel is adequate.

Weld Requirements between the Cap Channel and the Top Flange

As indicated in Section 11.2, continuous welds should be used to connect the cap channel to the beam top flange. The cap channel always extends the full length of the beam and thus is not a partial-length cover plate; however, it is appropriate to develop the cap channel according to the requirements of AISC *Specification* Section F13.3, "For welded cover plates, the welds connecting the cover plate termination to the beam or girder shall have continuous welds along both edges of the cover plate in the length a', defined in the following, and shall develop the cover plate's portion of the available strength of the beam or girder at the distance a' from the end of the cover plate." For this case, the cap channel must be developed as required by the location of the required moment. This requirement is typically satisfied by using the strength of materials equation, $q = VQ/I$, where

I = moment of inertia of the composite section, in.^{4}

Q = area of the cap channel multiplied by the distance from the composite neutral axis to the weak axis centroid of the channel, in.^{3}

V = shear from the vertical crane loads at the end of the runway beam, kips

q = required weld shear, kip/in.

The maximum shear at the end of the beam:

$$\text{Wheel loads} = 47.6 \text{ kips} + \frac{(18 \text{ ft})(47.6 \text{ kips})}{30 \text{ ft}}$$
$$= 76.2 \text{ kips}$$

$$\text{Dead load} = \frac{(0.050 \text{ kip/ft} + 0.099 \text{ kip/ft} + 0.0339 \text{ kip/ft})(30 \text{ ft})}{2}$$
$$= 2.74 \text{ kips}$$

$$V = 75.0 \text{ kips} + 2.74 \text{ kips}$$
$$= 77.7 \text{ kips}$$

$$Q = A_{ch}\bar{y}$$

$$\bar{y} = d_{total} - \bar{x} - y_1$$

The total depth of the section, d_{total}, equals the depth of the W30 plus the web thickness of the C15:

$$d_{total} = 29.7 \text{ in.} + 0.400 \text{ in.}$$
$$= 30.1 \text{ in.}$$

$$\bar{y} = 30.1 \text{ in.} - 0.788 \text{ in.} - 18.5 \text{ in.}$$
$$= 10.8 \text{ in.}$$

$$Q = (10.0 \text{ in.}^2)(10.8 \text{ in.})$$
$$= 108 \text{ in.}^3$$

$$q = \frac{(77.7 \text{ kips})(108 \text{ in.}^3)}{5{,}550 \text{ in.}^4}$$
$$= 1.51 \text{ kip/in.}$$
$$= 0.756 \text{ kip/in./side}$$

The required weld size is determined using AISC *Manual* Equation 8-2b:

$$\frac{R_n}{\Omega} = (0.928 \text{ kip/in.})\, Dl \qquad \text{(}\textit{Manual}\text{ Eq. 8-2b)}$$

$$D = \frac{q}{0.928 \text{ kip/in.}}$$
$$= \frac{0.756 \text{ kip/in.}}{0.928 \text{ kip/in.}}$$
$$= 0.815 \text{ sixteenths}$$

The W30×99 has a flange thickness of 0.670 in., and the C15×33.9 has a web thickness of 0.400 in.

From AISC *Specification* Table J2.4, the minimum size of the fillet weld is 3⁄16 in.

Use a continuous 3⁄16-in. fillet weld.

Because the fillet welds will develop the channel for the vertical loads, they will also satisfy the weld requirements for the smaller lateral loads.

Example 14.1.4—Crane Runway Girder with Cap Channel Design Example (LRFD)

Given:

Repeat Example 14.1.3 using LRFD. The design parameters are found in Example 14.1.1. From Example 14.1.2, the factored moments are M_{rx} with impact = 690 kip-ft (8,280 kip-in.), M_{rx} with no impact = 557 kip-ft (6,680 kip-in.), and M_{ry} = 38.9 kip-ft (467 kip-in.)

Solution:

The deflection criteria are the same as calculated for Example 14.1.1:

$I_x = 5{,}550 \text{ in.}^4 > 3{,}370 \text{ in.}^4$ **o.k.**
$I_t = 380 \text{ in.}^4 > 149 \text{ in.}^4$ **o.k.**

Flexural Strength

From the previous calculations:

$M_{nx} = 19{,}000$ kip-in
$M_{ny} = 3{,}470$ kip-in.

Check Top Flange for Biaxial Bending

$$\frac{M_{rx}}{\phi M_{nx}} + \frac{M_{ry}}{\phi M_{ny}} = \frac{(6{,}680 \text{ kip-in.})}{0.90(19{,}000 \text{ kip-in.})} + \frac{(467 \text{ kip-in.})}{0.90(3{,}470 \text{ kip-in.})} \tag{14-1b}$$

$$= 0.54 < 1.0 \quad \textbf{o.k.}$$

Tension Flange Yielding (including impact)

$$M_n = F_y S_1$$
$$= (50 \text{ ksi})(300 \text{ in.}^3)$$
$$= 15{,}000 \text{ kip-in.}$$

$$\phi M_n = 0.9(15{,}000 \text{ kip-in.})$$
$$= 13{,}500 \text{ kip-in.} > M_{rx} = 8{,}280 \text{ kip-in.} \quad \textbf{o.k.}$$

Check Web Sidesway Buckling

From the previous calculations in Example 14.1.3, the nominal strength is:

$$R_n = 86.5 \text{ kips}$$

The available strength is:

$$\phi = 0.85$$
$$\phi R_n = 0.85(86.5 \text{ kips})$$
$$= 73.5 \text{ kips}$$

From Example 14.1.2, the factored wheel load not including impact = 55.5 kips.

The maximum wheel load with impact is:

$$(55.5 \text{ kips})(1.25) = 69.4 \text{ kips}$$
$$69.4 \text{ kips} < 73.5 \text{ kips} \quad \textbf{o.k.}$$

A W30×99 with a C15×33.9 cap channel is adequate, as it was in the ASD solution. The W24×131 plain beam is the most economical solution.

Welding requirements are not repeated.

14.2 PLATE GIRDERS

Plate-girder runways can be designed in the same manner as rolled sections, but the following items become more important to the design.

1. Plate-girder runways are normally used in mill buildings where many cycles of load occur. Because they are built-up sections, fatigue considerations are extremely important.
2. Welding stiffeners to the girder webs may produce a fatigue condition that would require a reduction in stress range (Reemsynder, 1978). Thickening the girder web so that stiffeners are not required (except for the bearing stiffeners that are located at points of low flexural stress) may provide a more economical solution. However, in recent years, numerous cases of fatigue cracks at the junction of the top flange of the girder and the web have been noted. These cracks have been due to:
   a. The rotation of the top flange when the crane rail was not directly centered over the web as shown in Figure 14-3.
   b. The presence of residual stresses from the welding of the flange and stiffeners to the web.
   c. Localized stresses under the concentrated wheel loads.

The presence or absence of stiffeners affects items 2a and 2c. If intermediate stiffeners are eliminated or reduced, the problem of eccentric crane rail location becomes more severe. If intermediate stiffeners are provided, CJP welds should be used to connect the top of the stiffener to the underside of the top flange. At the tension flange, the stiffeners should be terminated not less than four times or more than six times the web thickness from the toe of the web-to-flange weld.

Shown in Figures 14-4 through 14-7 are details that pertain to heavy crane runway installations. The solution for different depth girders as shown in Figure 14-6 can be problematic for potential girder replacement. An alternative is to cope the deeper girder so that both girders are supported directly on the column top. The tension rod shown in Figure 14-7 provides an additional load path (other than the bolts in combined tension and shear) for the stop forces and may be a good detail to use with high-speed cranes.

The difference in weld and stiffener detailing between older AISC publications and the stiffeners shown here are the result of revised detailing techniques for fatigue conditions.

14.3 SIMPLE SPAN VERSUS CONTINUOUS RUNWAYS

The decision to use simple-span or continuous runway crane girders has been debated for years. In general, continuous girders should not be used unless absolutely necessary.

Following is a brief list of advantages of each system. It is clear that each can have an application.

1. Advantages of simple-span girders:
   a. Much easier to design for various load combinations.
   b. Typically unaffected by differential settlement of the supports.
   c. More easily replaced if damaged.
   d. More easily reinforced if the crane capacity is increased.
2. Advantages of continuous girders:
   a. Continuity reduces deflections that quite often control.
   b. Result in lighter-weight shapes and a savings in steel cost when fatigue considerations are not a determining factor.

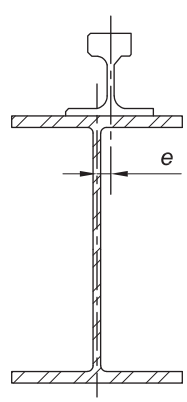

Fig. 14-3. Rail misalignment.

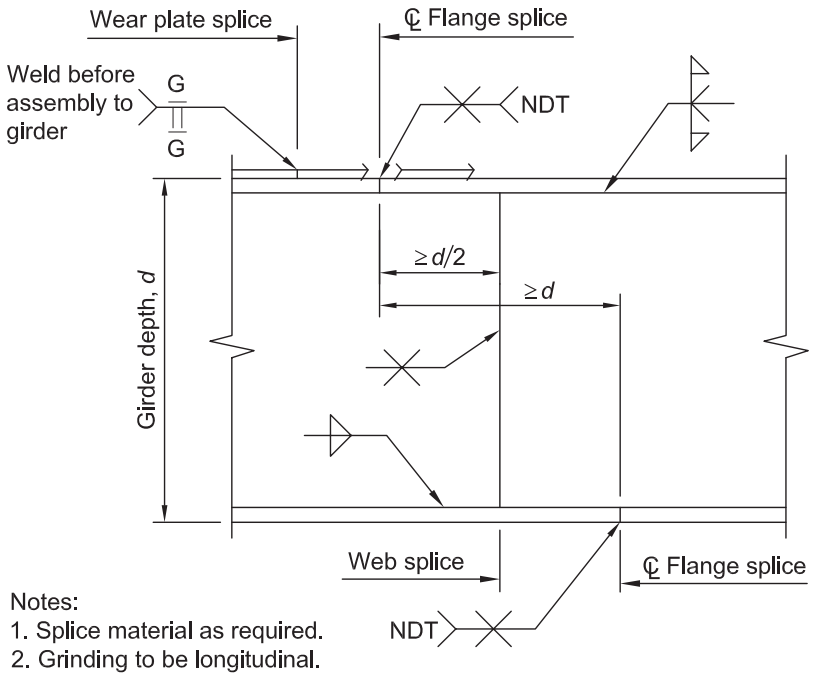

Fig. 14-4. Girder splice.

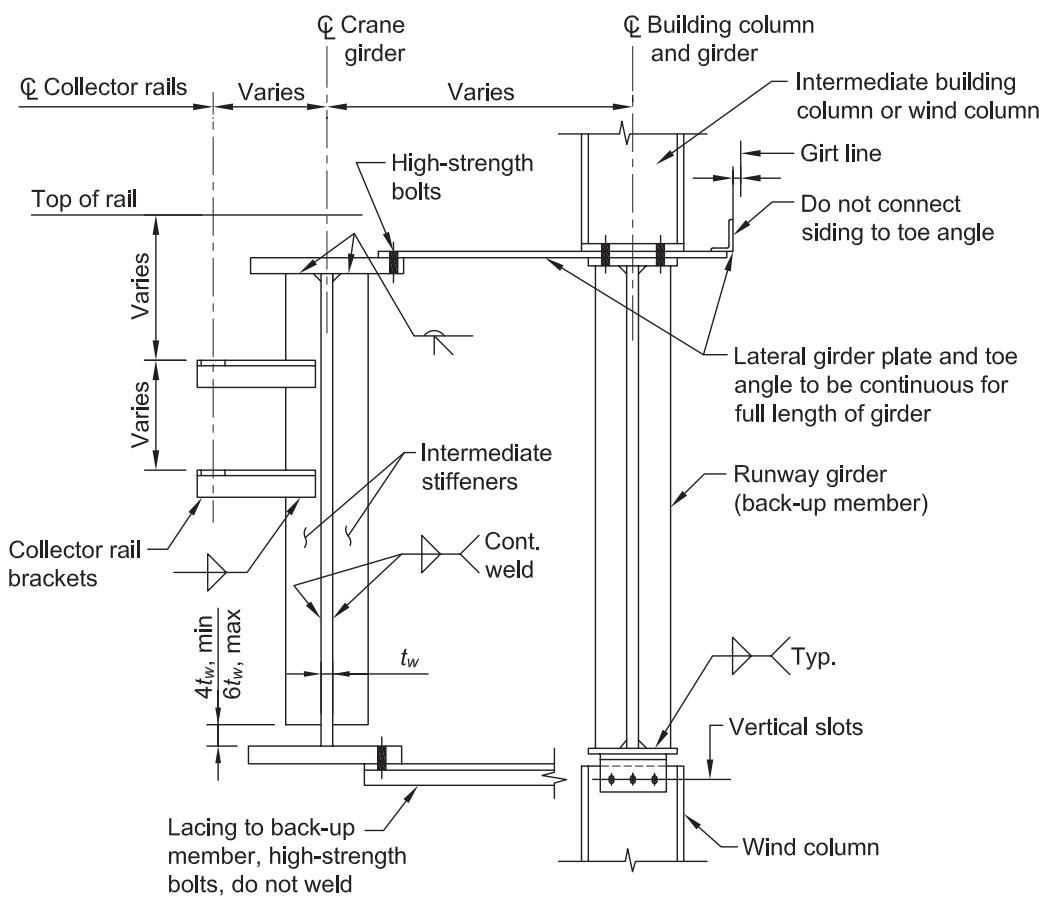

Fig. 14-5. Girder tieback.

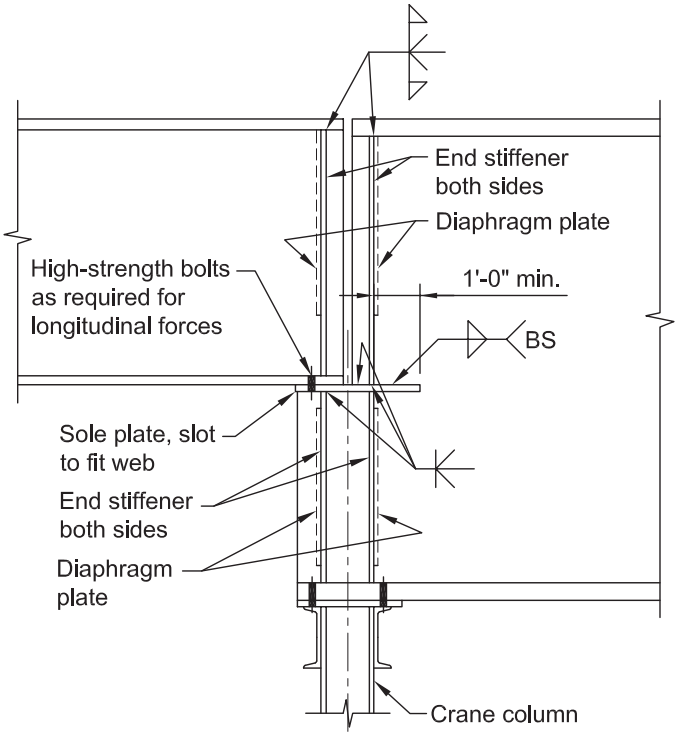

Fig. 14-6. Section at different-depth crane girders.

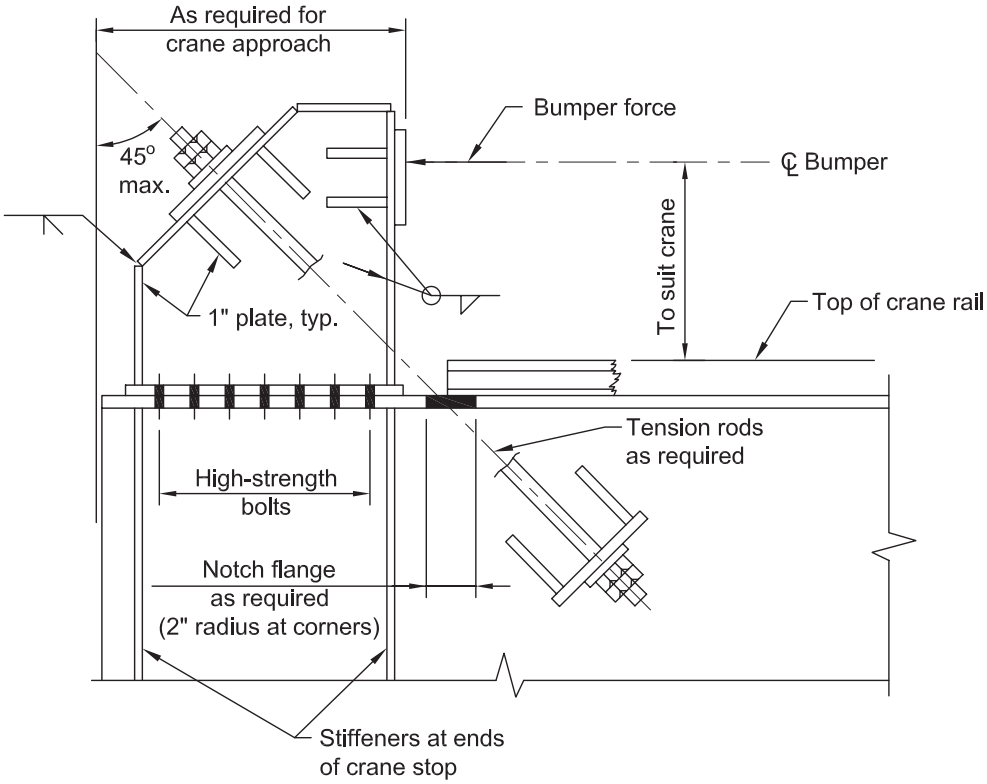

Fig. 14-7. Heavy-duty crane stop.

Continuous girders should not be used if differential settlement of the supports is of the magnitude that could cause damage to the continuous members. Also, when continuous girders are subjected to fatigue loading and have welded attachments on the top flange (rail clips), the allowable stress range is reduced considerably. Any advantage may therefore be eliminated.

A comparison of several runway beam designs is shown in Figure 14-8. For spans varying from 20 to 30 ft, 50-ksi beams were designed for a 4-wheel, 10-ton crane, with a 70-ft bridge for continuous (two-span) versus simple-span conditions. In these examples, deflection did not control. Fatigue was not considered. The curves represent the trends for heavier cranes as well. In general, two-span continuous crane girders could save about 18% in weight over simply supported girders.

14.4 LATERAL LOAD-RESISTING MEANS

There are several ways to resist the lateral crane loads for the design of runway girders. The three main methods are briefly discussed in the following sections.

14.4.1 Cap Channels, Cap Plates, or Angles Welded to the Top Flange

Cap channels are often used to control lateral deflections and to control the stresses due to lateral loads. For light-duty and lightweight cranes (less than 5 ton), cap channels may not be required. Studies have found that a steel savings of approximately 30 lb/ft is required to justify the cost of welding a cap to a structural shape, and thus, their use is many times not justified. As discussed in Section 11.2, "Crane Runway Fatigue Considerations," for CMAA Class E and F, cranes cap channels and cap plates are not recommended.

14.4.2 Oversized Top Flange

When plate girders are designed, the top flange can be designed to provide the necessary strength for vertical bending and lateral bending.

14.4.3 Backup Trusses and Apron Plates

For runway girders with spans in the range of 60 ft or more, the best solution is to design a horizontal truss or a horizontal apron plate to resist the lateral crane loads. The truss or apron plate is supported vertically by the runway girder on one edge and a vertical truss on the other edge.

14.5 RUNWAY BRACING CONCEPTS

Mueller (1965) wrote an excellent paper on the subject of crane-girder bracing. As illustrated in Figure 2 in the Mueller paper (repeated here as Figure 14-9), improper detailing at the end-bearing condition could lead to a web tear in the end of the crane girder. Although Figure 14-9 indicates rivets in the plate, the same situation could exist if bolts were used. The detail shown in Figure 14-10 has been used to eliminate this problem for light-crane systems. The welded detail should not be used other than for CMAA crane Classes A and B. The tiebacks as shown restrict girder end rotation and thus can crack due to fatigue. The details previously shown in Figures 14-5 and 14-6 represent similar details for heavy cranes. Use of this detail allows end rotation and yet properly transfers the required lateral forces into the column.

A common method of bracing the crane girder is to provide a horizontal truss (lacing) or a horizontal plate to connect the crane girder top flange to an adjacent structural member as previously illustrated in Figures 13-5 and 13-6. An advantage of using the horizontal plate is that it can be used as a walkway for maintenance purposes.

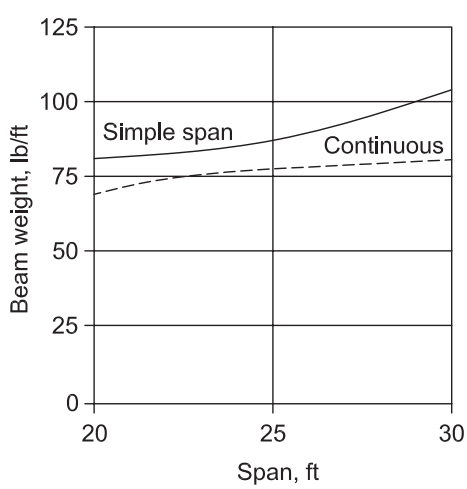

Fig. 14-8. Runway beam design comparison.

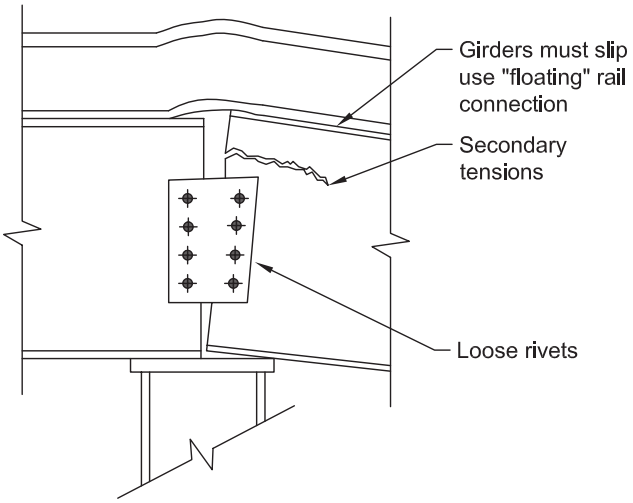

Fig. 14-9. Improper girder connection detail.

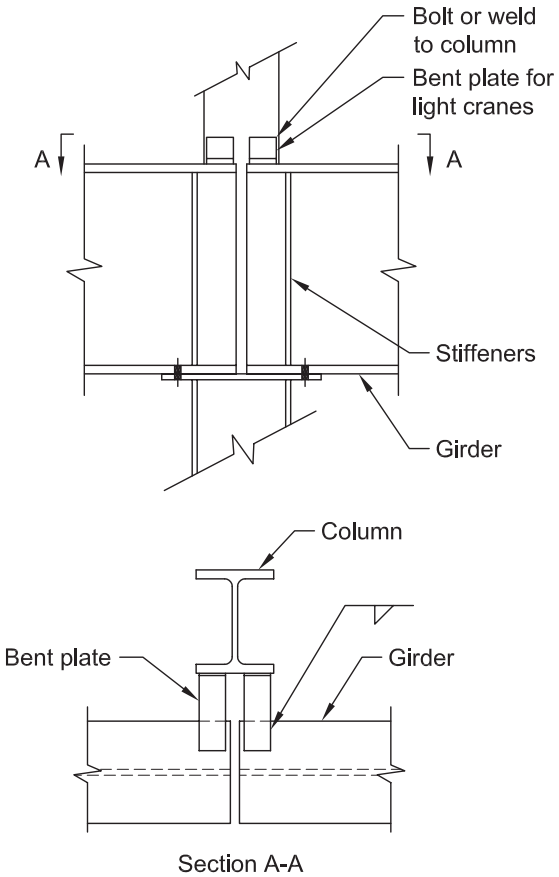

Fig. 14-10. Proper tieback detail.

A critical consideration in the use of this system is using flexible lacing in the vertical direction, enabling the crane girder to freely deflect relative to the structural member to which it is attached. If the lacing is not flexible, stresses will be produced that could cause a fatigue failure of the lacing system, thereby losing the lateral support for the girder.

AIST TR-13 requires that girders more than 36 ft in length must have the bottom flange braced by a horizontal truss system. The origin of this requirement is not obvious; however, it appears that compliance with the AISC *Specification* web sidesway buckling equations may analytically satisfy this requirement. The best solution to prevent web sidesway buckling is to select a girder with a wide bottom flange.

14.6 CRANE STOPS

AIST TR-13 indicates that, "The load applied to the runway crane stop shall be included in the design of crane runway girders, their connections and supporting framework. The maximum design bumper force shall be coordinated with the crane designer and shown on the structural drawings. The design bumper force shall be less than or equal to the maximum allowable force on the crane stop."

Currently most crane stops are designed and supplied using hydraulic bumpers. The AIST TR-13 Commentary contains an example calculation for determining the forces on the structure when hydraulic bumpers are used. An excellent reference for the design criterion for hydraulic bumpers is "Hydraulic Bumpers for the Protection of Buildings, Cranes and Operators from Impact Damage" (Kit, 1996).

Older bumpers were designed and supplied as spring-type bumpers. For spring-type bumpers, the longitudinal crane stop force acting at the center of mass of the bridge and trolley may be calculated from Equation 14-3. The force on each runway stop is the maximum bumper reaction from the inertial force acting at such locations.

$$F = \frac{WV^2}{gc_t} \tag{14-3}$$

where

V = specified crane velocity at moment of impact, required by *Specification for Electric Overhead Traveling Cranes for Steel Mill Service*, AIST TR-06 (AIST, 2018) to be 50% of full load-rated speed, ft/s

W = total weight of crane exclusive of lifted load, kips

c_t = stroke of spring at point where the crane stopping energy is fully absorbed, ft

g = acceleration of gravity, 32.2 ft/s^2

For bumper blocks of wood or rubber (commonly found in older cranes), Equation 14-3 is not directly applicable. Manufacturer's literature or experience must be used for such installations. In the absence of specific data, it is recommended that the designer assume the bumper force to be the greater of twice the tractive force or 10% of the entire crane weight.

14.7 CRANE RAIL ATTACHMENTS

There are four general types of anchoring devices used to attach crane rails to crane runway beams: hook bolts, rail clips, rail clamps, and patented clips. Details of hook bolts and rail clamps are shown in the AISC *Manual*.

14.7.1 Hook Bolts

Hook bolts provide an adequate means of attachment for light rails (40 lb–60 lb) and light-duty cranes (CMAA 70 Classes A, B, and C). The advantages of hook bolts are, (1) they are relatively inexpensive, (2) there is no need to provide holes in the runway beam flange, and (3) it is easy to install and align the rail. They are not recommended for use with heavy-duty cycle cranes (CMAA 70 Classes D, E, and F) or with heavy cranes (greater than 20-ton lifting capacity) because hook bolts are known to loosen and/or elongate. It is generally recommended that hook bolts should not be used in runway systems that are longer than 500 ft because the bolts do not allow for longitudinal movement of the rail. Because hook bolts are known to loosen in certain applications, a program of periodic inspection and tightening should be instituted for runway systems using hook bolts. Designers of hook bolt attachments should be aware that some manufacturers supply hook bolts of smaller-than-specified diameter by the use of upset threads.

14.7.2 Rail Clips

Rail clips are forged or cast devices that are shaped to match specific rail profiles. They are typically bolted to the runway girder flange with one bolt or are sometimes welded. Rail clips have been used satisfactorily with all classes of cranes. However, one drawback is that when a single bolt is used, the clip can rotate in response to rail longitudinal movement. This clip rotation can cause a camming action thus forcing the rail out of alignment. Because of this limitation, rail clips should only be used in crane systems subject to infrequent use and for runway systems less than 500 ft in length.

14.7.3 Rail Clamps

Rail clamps are a common method of attachment for heavy-duty cycle cranes. There are two types of rail clamps—tight and floating. Each clamp consists of an upper clamp plate and a lower filler plate.

The lower plate is flat and roughly matches the height of the toe of the rail flange. The upper plate covers the lower

plate and extends over the top of the lower rail flange. In the tight clamp, the upper plate is detailed to fit tight to the lower rail flange top, thus "clamping" it tightly in place when the fasteners are tightened. In the past, the tight clamp had been illustrated with the filler plates fitted tightly against the rail flange toe. This tight fit-up was rarely achieved in practice and is not considered to be necessary to achieve a tight-type clamp. In the floating-type clamp, the pieces are detailed to provide a clearance both alongside the rail flange toe and below the upper plate. The floating type does not, in reality, clamp the rail but merely holds the rail within the limits of the clamp clearances. High-strength bolts are recommended for both clamp types.

Tight clamps are typically preferred and recommended by crane manufacturers because of concerns that the transverse rail movement allowed in the floating type causes accelerated wear on crane wheels and bearings. Floating rail clamps may be required by crane runway and building designers to allow for longitudinal movement of the rail, thus preventing or at least reducing thermal forces in the rail and runway system.

Because tight clamps prevent longitudinal rail movement, they should not be used in runways greater than 500 ft in length. Because floating rail clamps are frequently needed and crane manufacturers' concerns about transverse movement are valid, a modified floating clamp is required. In such a clamp, it is necessary to detail the lower plate to a closer tolerance with respect to the rail flange toe. The gap between the lower plate edge and flange toe can vary between snug and a gap of ⅛ in. The ⅛-in. clearance allows a maximum of ¼-in. float for the system. This should not be objectionable to crane manufacturers because this amount of float is within normal CMAA 70 tolerances for crane spans in the range of 50 to 100 ft—that is, spans typically encountered in general construction. In order to provide field adjustment for variations in the rail width, runway beam alignment, beam sweep, and runway bolt hole location, the lower plate can be punched with the holes off center so that the plate can be flipped to provide the best fit. An alternative would be to use short-slotted or oversize holes. In this case, one must rely on bolt tightening to clamp the connection to prevent filler plate movement.

Rail clamps are typically provided with two bolts per clamp. Two bolts are desirable because they prevent the camming action described in the section on rail clips. A two-bolt design is especially recommended if clamps of the longitudinal expansion type described previously are used. Rails are sometimes installed with pads between the rail and the runway beam. When this is done the lateral float of the rail should not exceed 1⁄32 in. to reduce the possibility of the pads being worked out from under the rail.

14.7.4 Patented Rail Clips

This fourth type of anchoring device covers various patented devices for crane rail attachment. Each manufacturer's literature presents in detail the desirable aspects of the various designs. In general, they are easier to install due to their greater range of adjustment while providing the proper limitations of lateral movement and allowance for longitudinal movement. Patented rail clips should be considered as a viable alternative to conventional hook bolts, clips, or clamps. Because of their desirable characteristics, patented rail clips can be used without restriction except as limited by the specific manufacturer's recommendations. Installations using patented rail clips sometimes incorporate pads beneath the rail. When this is done, the lateral float of the rail should be limited as in the case of rail clamps.

14.7.5 Design of Rail Attachments

The design of rail attachments is largely empirical. The selection of the size and spacing of attachments is related to rail size. This relation is reasonable because the rail size is related to load.

With regard to spacing and arrangement of the attachment, the following recommendations are given. Hooked bolts should be installed in opposing pairs with 3 to 4 in. between the bolts. The hooked bolt pairs should not be spaced farther than 2 ft apart. Rail clips and clamps should be installed in opposing pairs. They should be spaced 3 ft apart or less.

In addition to crane rail attachment, other attachments in the form of clips, brackets, stiffeners, etc., are often attached to the crane girder. These attachments are often added by plant engineering personnel. Welding should only be done after a careful engineering evaluation of its effects. Welding (including tack welding) can significantly shorten the fatigue life. Therefore:

1. Never weld crane rails to girders.
2. Clamp, screw, or bolt all attachments to crane girders to avoid fatigue problems.
3. All modifications and repair work must be submitted to engineering for review and approval before the work is performed.

14.7.6 Rail Pads

One aspect of crane rail design is the use of crane rail pads. These are generally preformed fabric pads that work best with welded rail joints. The resilient pads will reduce fatigue, vibration, and noise problems. Reductions in concentrated compression stresses in the web have been achieved with the use of these pads. Significant reductions in wear to the top of the girder flange have also been noted. With the exception of

a few patented systems, the pads are generally not compatible with floating rail installations because they can work their way out from under the rail. Also, prior to using a pad system, careful consideration to the cost benefits of the system should be evaluated.

14.8 CRANE RAILS AND CRANE RAIL JOINTS

The selection of rail relates to crane considerations (basically, crane weight) and is typically made by the crane manufacturer. Once this decision is made, the principal consideration is how the rail sections are to be joined. There are several methods to join rails, but two predominate at the present time.

The bolted butt joint is the most commonly used rail joint. Butt joint alignment is created with bolted splice plates. These plates must be properly maintained (bolts kept tight). If splice bars become loose and misaligned joints occur, a number of potentially serious problems can result, including chipping of the rail, bolt fatigue, damage to crane wheels, and as a result of impact loading, increased stresses in the girders. Girder web failures have been observed as a consequence of this problem.

The welded butt joint, when properly fabricated to produce full strength, provides an excellent and potentially maintenance-free joint. However, if repairs are necessary to the rails, the repair procedure and consequently the down time of plant operations is typically longer than if bolted splices had been used. The metallurgy of the rails must be checked to ensure use of proper welding techniques, but if this is accomplished, the advantages can be significant. Principal among these is the elimination of joint impact stresses resulting in reduced crane wheel bearing wear.

Rail joints should be staggered so that the joints do not line up on opposite sides of the runway. The amount of stagger should not equal the spacing of the crane wheels, and in no case should the stagger be less than 1 ft.

Rail misalignment is the single most critical aspect of the development of high-impact and lateral stresses in crane girders. Proper use and maintenance of rail attachments is critical in this regard. Rail attachments must be completely adjustable and yet be capable of holding the rail in alignment. Because the rails may become misaligned, regular maintenance is essential to correct the problem.

14.9 RUNWAY CLEARANCES, TOP OF RAIL ELEVATION, AND BUILDING EAVE HEIGHT

The top of crane rail (TOR) elevation and the building eave height are established from the hook height. If the crane has not been ordered, the crane dimensions must be approximated; otherwise, the crane data sheets can be used. A good source for dimensional information is the *Whiting Crane Handbook* (Whiting, 1967). The owner must establish the hook height that is required. Once this is known, the TOR can be established from the crane data sheet, and the elevation of the top of the crane can be established. OSHA *Overhead and Gantry Cranes*, *Subpart N*, *29 of CFR 1910.179* (OSHA, 2010a), hereafter referred to as OSHA *Subpart N*, requires a minimum clearance of 3 in. between the top of the crane and the bottom of the roof members or other obstructions. Allowance must be made for piping, lights, and other items that might be below the bottom of the roof members.

The building eave height can be established as follows:

Eave height = hook height + hook to top of crane + clearance to structure + structural member depth + deck height

OSHA *Subpart N* also requires a minimum of 2 in. between the end truck and the structural columns. When an apron plate exists, the distance between the end truck and the structural column should be a minimum of 18 in.

Chapter 15
Crane Runway Fabrication and Erection Tolerances

Crane runway fabrication and erection tolerances should be addressed in the project specifications because standard tolerances used in steel frameworks for buildings are not tight enough for buildings with cranes. Also, some of the required tolerances are not addressed in standard specifications.

Tolerances for structural shapes and plates are given in the Standard Mill Practice section of the AISC *Manual*. These tolerances cover the permissible variations in geometrical properties and are taken from ASTM specifications, AISI steel product manuals, and producer's catalogs. In addition to these standards, the following should be applied to crane runways.

The following tolerances are from AIST TR-13:

a. Sweep: Not to exceed ¼ in. in a 50-ft beam length.

b. Camber: Not to vary from the camber given on the drawings by ±¼ in. in a 50-ft beam length.

c. Squareness: Within 18 in. of each girder end, the flange is required to be free of curvature and normal to the girder web.

Columns, base plates, and foundations should adhere to the following tolerances:

a. Column anchor bolts should not deviate from their theoretical location by 0.4 times the difference between bolt diameter and hole diameter through which the bolt passes.

b. Individual column base plates should be within ±1/16 in. of theoretical elevation and should be level within ±0.01 in. across the plate length or width. Paired base plates serving as a base for double columns should be at the same level and should not vary in height from one to another by more than 1/16 in.

Crane runway girders and crane rails should be fabricated and erected for the following tolerances:

a. Crane rails should be centered on the centerline of the runway girders. The maximum eccentricity of center of rail-to-centerline of girder should be three-quarters of the girder web thickness.

b. Crane rails and runway girders should be installed to maintain the following tolerances:

   1. The horizontal distance between crane rails should not exceed the theoretical dimension by ±¼ in. measured at 68°F.

   2. The longitudinal horizontal misalignment from straight of rails should not exceed ±¼ in. in 50 ft with a maximum of ±½-in. total deviation in the length of the runway.

   3. The vertical longitudinal misalignment of crane rails from straight should not exceed ±¼ in. in 50 ft measured at the column centerlines with a maximum of ±½-in. total deviation in the length of the runway.

Table 15-1 is taken from the MBMA *Low Rise Building Systems Manual* (MBMA, 2012) and gives alternate tolerances. CMAA has also established crane runway installation tolerances that may be the controlling requirement for the project. Crane suppliers may require conformance with CMAA 70 tolerances, which differ from AIST TR-13 and the MBMA *Manual*.

Table 15-1. Summary of Crane Runway Tolerances			
Item	**Illustration**	**Tolerance**	**Maximum Rate of Change**
Span	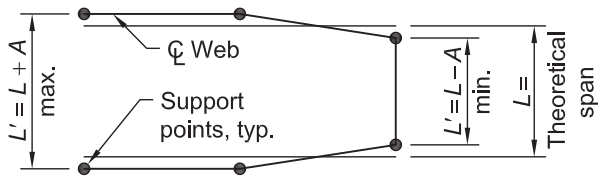	$A = \frac{3}{8}$ in.	$\frac{1}{4}$ in./20 ft
Straightness	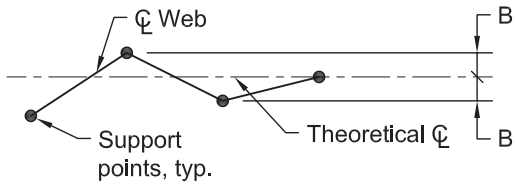	$B = \frac{3}{8}$ in.	$\frac{1}{4}$ in./20 ft
Elevation	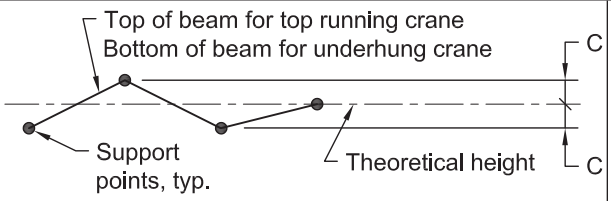	$C = \frac{3}{8}$ in.	$\frac{1}{4}$ in./20 ft
Beam-to-beam top running		$D = \frac{3}{8}$ in.	$\frac{1}{4}$ in./20 ft
Beam-to-beam underhung		$E = \frac{3}{8}$ in.	$\frac{1}{4}$ in./20 ft
Adjacent beams	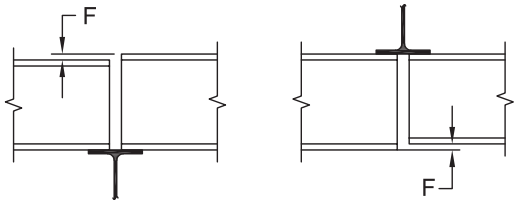	$F = \frac{1}{8}$ in.	NA

Chapter 16
Column Design

No attempt will be made to give a complete treatise on the design of steel columns. The reader is referred to several excellent texts on this subject: Gaylord et al. (1991) and Salmon et al. (2008).

This section of the Guide includes a discussion of the manner in which a crane column can be analyzed, how the detailing and construction of the building will affect the loads the crane column receives, and how shear and moment will be distributed along its length. Also included is a detailed example of a crane column design to illustrate certain aspects of the design.

In most crane buildings the crane columns are statically indeterminate. Typically, the column is restrained at the bottom by some degree of base fixity. The degree of restraint is, to a large extent, under the control of a designer, who may require either a fixed base or a pinned base.

It is essential to understand that the proper design of crane columns can only be achieved when column moments are realistically determined. This determination requires a complete frame analysis in order to obtain reliable results. Even if a complete computer frame analysis is employed, certain assumptions must still be made of the degree of restraint at the bottom of a column and the distribution of lateral loads in the structure. Further, in many cases, a preliminary design of these crane columns must be performed either to obtain approximate sizes for input into a computer analysis or for preliminary cost and related feasibility studies. Simplifying assumptions are essential to accomplish these objectives.

16.1 BASE FIXITY AND LOAD SHARING

Crane columns are constructed as bracketed, stepped, laced, or battened, as shown in Figure 16-1. In each case, the eccentric crane loads and lateral loads produce moments in the column. The distribution of column moments is one principal consideration.

For a given loading condition, the moments in a crane column are dependent on many parameters. Most parameters (e.g., geometry, nonprismatic conditions) are readily accommodated in the design process using standard procedures. However, two parameters that have a marked effect on column moments are base fixity and the amount of load sharing with adjacent bents.

For the column configuration illustrated in Figure 16-2, the model used for the analysis is shown in Figure 16-3. The loading consists of a vertical crane load of 310 kips to the left column and 100 kips to the right column. The eccentricity of the vertical load to the column centroid is 1.51 ft. The lateral crane load to each side is 23 kips. A stepped column is used, but the same general principles apply to the other column types. For simplicity, no roof load is used.

Base Fixity

The effect of base fixity on column moments was determined by a first-order elastic analysis for the frame for fixed- and pinned-base conditions. The results of the analysis shown in Figure 16-4 demonstrate that a simple base will result in

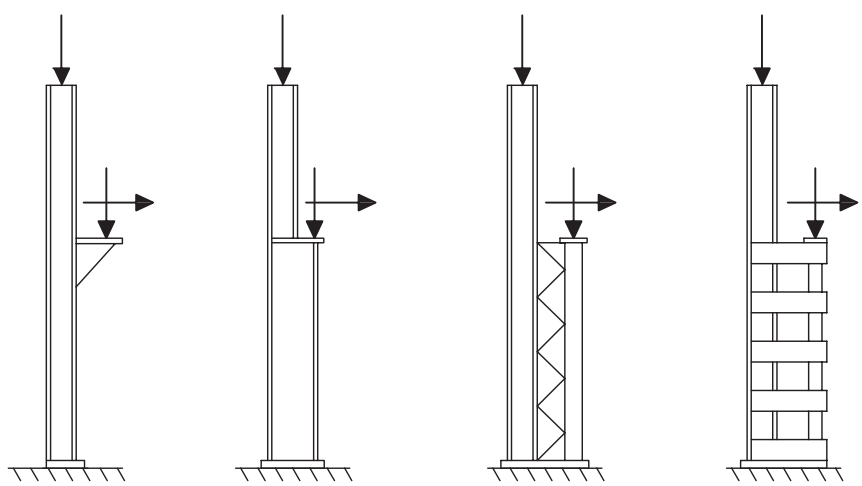

(a) bracketed *(b) stepped* *(c) laced* *(d) battened*

Fig. 16-1. Column types.

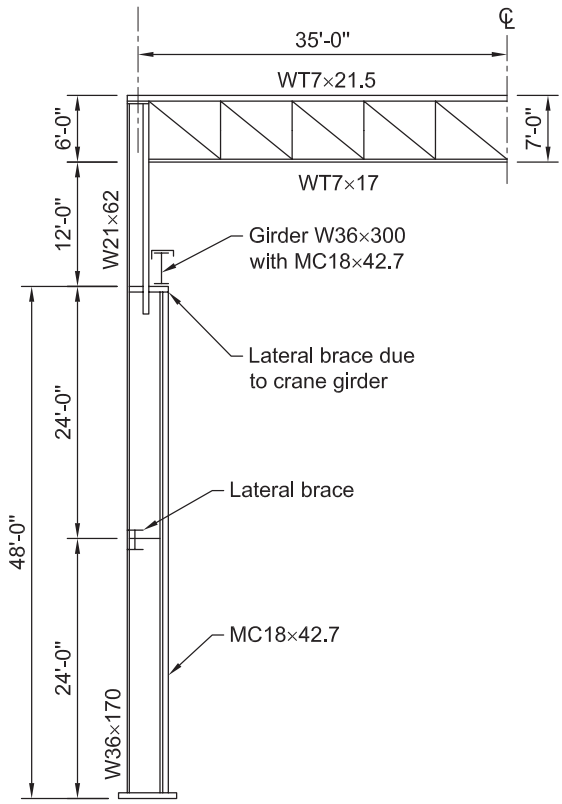

Fig. 16-2. Example frame.

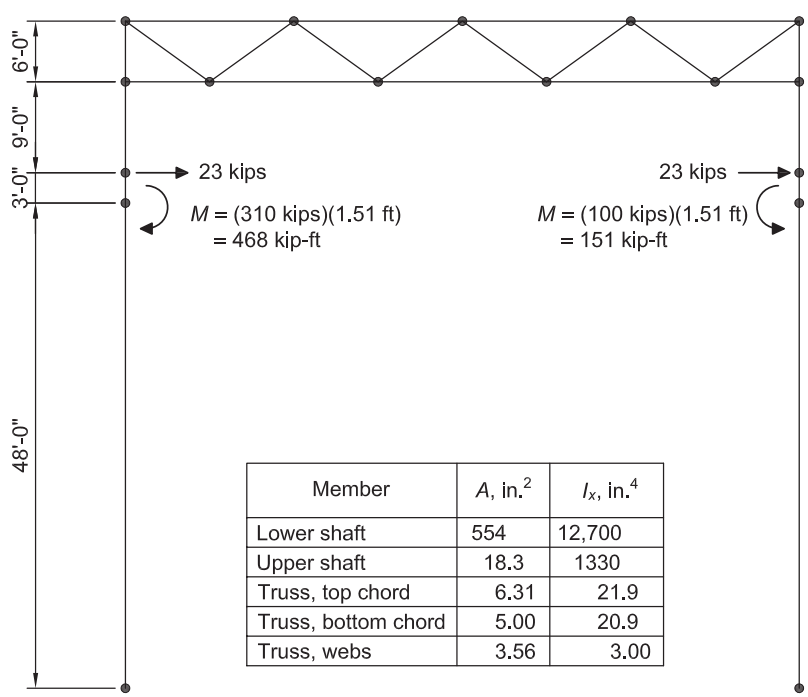

Member	A, in.^{2}	I_x, in.^{4}
Lower shaft	554	12,700
Upper shaft	18.3	1330
Truss, top chord	6.31	21.9
Truss, bottom chord	5.00	20.9
Truss, webs	3.56	3.00

Fig. 16-3. Analysis model.

extremely large moments in the upper portion of the column, and the structure will be much more flexible than a fixed-base column.

For fixed-base columns, the largest moment is carried to the base section of the column where it can, in the case of the stepped column, be more easily carried by the larger section.

It is frequently argued that taking advantage of full fixity cannot be achieved in any practical detail. However, the crane-induced lateral loads on the crane column are of short duration, and for such short-term loading, an "essentially fixed" condition can typically be achieved through proper design. The reduced column moments due to the fixed-base condition provide good economy without sacrificing stiffness.

There will be cases where subsoil conditions, existing construction restrictions, property line limitations, etc., will preclude the development of base fixity and the hinged base must be used in the analysis. Although the fixed-base concept as stated is deemed appropriate due to the short-term nature of crane loads, for other long-duration building loads, the assumption of full fixity may be inappropriate. The reader is referred to an excellent article by Galambos (1960) that deals with the effects of base fixity on the buckling strength of frames.

Load Sharing to Adjacent Bents

If a stiff system of bracing is used (i.e., a horizontal bracing truss as shown in Figure 16-5), then the lateral crane forces and shears can be distributed to adjacent bents, thereby reducing column moments. Note that such bracing does not reduce column moments induced by wind, seismic, or roof loads, but only the singular effects of crane loads. Figure 16-6 depicts the moment diagram in the column from a frame analysis based on lateral crane loads being shared by the two adjacent frames (i.e., two-thirds of the lateral sway force is distributed to other frames). The significant reductions in moment are obvious when compared to Figure 16-4. (Note: The "two-thirds" is an arbitrary distribution used at this point only to illustrate the concept and the significant advantage to be gained. The following paragraphs describe in detail how load sharing actually occurs and how it can be evaluated.)

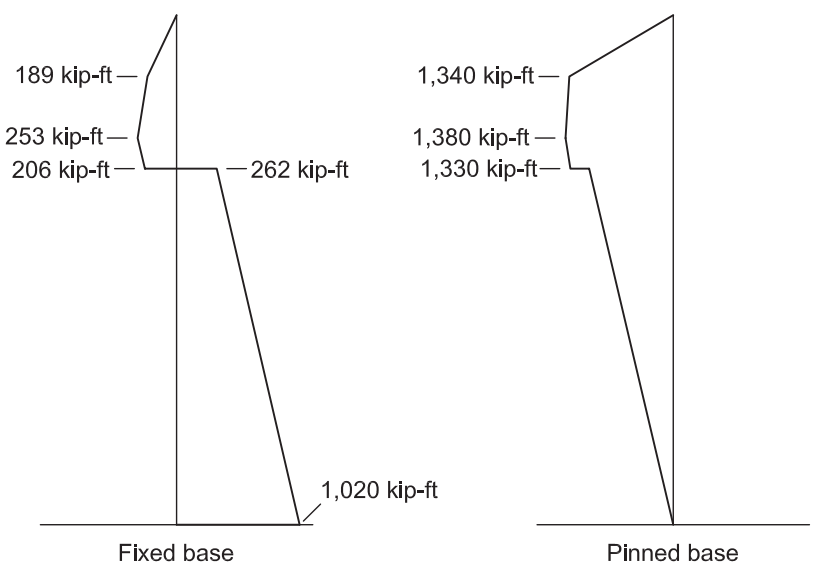

Fig. 16-4. Analysis results.

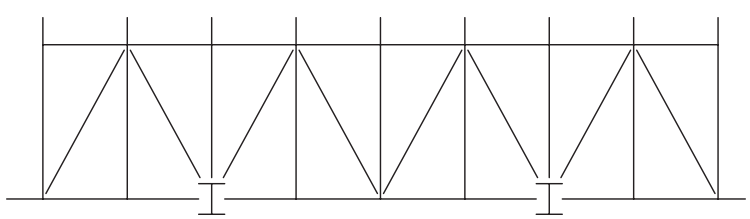

Fig. 16-5. Roof plane horizontal bracing.

Consider a portion of a roof system consisting of five frames braced as shown in Figure 16-7. The lateral crane force will result in a reactive force at the level of the lower chord of the roof truss, as shown in Figure 16-8. The distribution of this reactive force to the adjacent frames can be obtained by stiffness methods. This is accomplished by analyzing the horizontal bracing system as a truss on a series of elastic supports. The supports are provided by the building frames and have linear elastic spring constants equal to the reciprocal of the displacement of individual frames due to a unit lateral load, as shown in Figure 16-9. The model is depicted in Figure 16-10. The springs are imaginary members that provide the same deflection resistance as the frames.

This procedure has been programmed and analyzed for many typical buildings. It is obvious that the degree of load sharing varies and is dependent upon the relative stiffness of the bracing to the frames; however, it was found that for typical horizontal bracing systems, a lateral load applied to a single interior frame will be shared almost equally by at least five frames. This is logical because bracing of reasonable proportions made up of axially loaded members is many times as stiff as the moment frames that are dependent upon the bending stiffness of their components.

A building supporting a 100-ton crane is used to illustrate the effect of load sharing. A roof system consisting of five frames cross-braced as shown in Figure 16-7 was analyzed as shown in Figure 16-10 to determine the force in each frame due to a 20-kip force applied to the center frame. The 20-kip force represents the reactive force at the elevation of the bottom chord bracing due to the horizontal crane thrust at the top of the crane girder. The final distribution is shown in Figure 16-11.

Even though reasonable truss type bracing will distribute a concentrated lateral force to at least five frames, it is recommended that load sharing be limited to three frames (the loaded frame plus the frame to either side). The reason

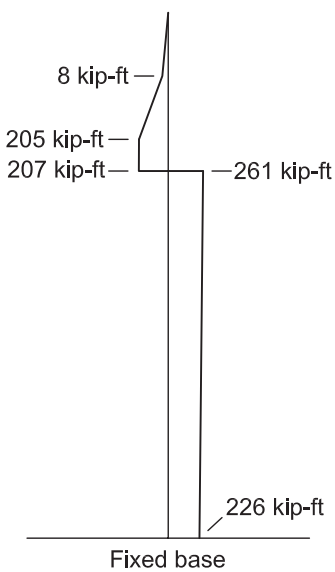

Fig. 16-6. Moment diagram with load sharing.

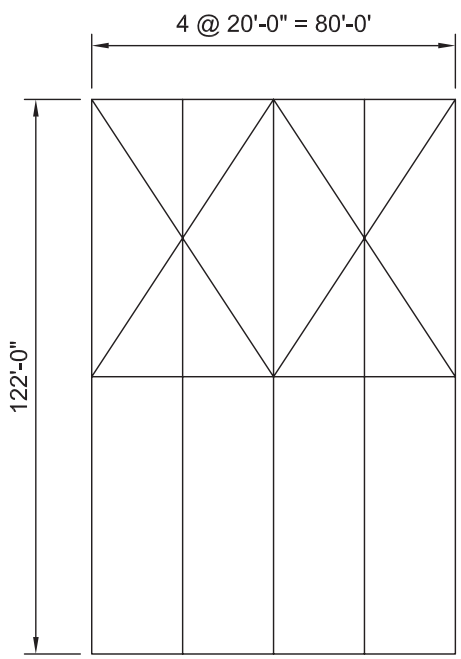

Fig. 16-7. Portion of a roof-framing plan.

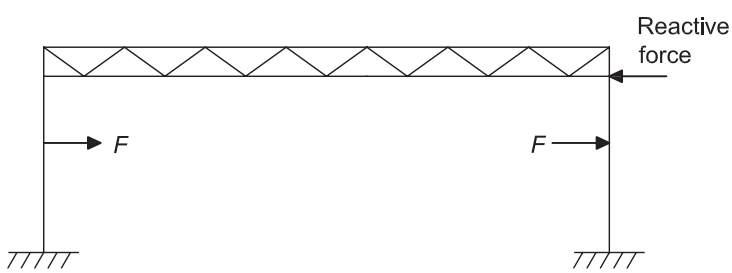

Fig. 16-8. Reactive force.

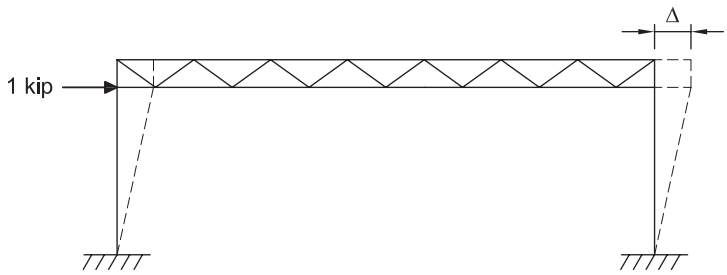

Fig. 16-9. Unit lateral load.

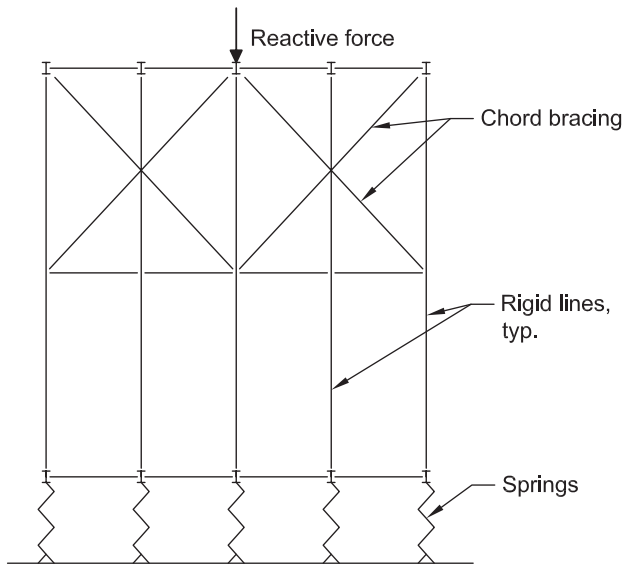

Fig. 16-10. Computer model.

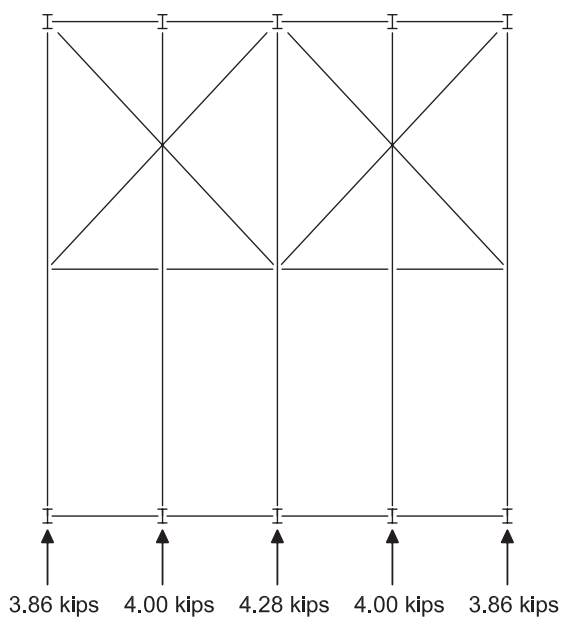

Fig. 16-11. Final force distribution.

for this conservative recommendation is that unless the horizontal bracing truss members are pretensioned, they may tend to sag even though "draw" is provided. Thus, a certain amount of movement may occur before the truss "takes up" and becomes fully effective in distributing the load to adjacent frames. The designer may conclude that if load sharing occurs, a simple method to handle the analysis is to design a given column for one-third the lateral load. This is wrong and unsafe! Each individual crane column must be designed for the full lateral force of the crane. It is only the reactive force applied at the level of the bracing that is distributed to the adjacent frames. The results of this analysis must be added to or compared with the results of other analyses that are unaffected by the load sharing—that is, gravity, wind, and seismic loads.

The foregoing discussion was presented to explain how load sharing works. Most engineers will determine the column moments and forces by modeling three frame lines with the horizontal truss included in the model.

To summarize, the most economical designs will result when the following criteria are designed into the structure:

1. Fixed-base columns.
2. Horizontal bracing truss (unless wind loads control) such that lateral crane loads are distributed to adjacent columns, which reduces frame drift and moments due to drift.
3. When the roof frames are fabricated trusses, the most economical bracing truss location is at the elevation of the bottom chord where they are typically easier to erect. The bottom-chord bracing system that is required for uplift and slenderness ratio control may also be adequate for distributing concentrated lateral forces.

16.2 PRELIMINARY DESIGN METHODS

Preliminary design procedures for crane columns are especially helpful due to the complexity of design of these members. Even with the widespread availability of computers, a good preliminary design can result in substantial gains in overall efficiency. The preceding sections have pointed out that to obtain meaningful column moments, a frame analysis is required. A reliable hand calculation method for preliminary design is not only helpful but essential to reduce final design calculation time.

The frame analysis that is required to obtain an exact solution accomplishes the following:

1. It accounts for sidesway.
2. It properly handles the restraint at the top and at the base of the column.
3. It accounts for non-prismatic member geometry.

16.2.1 Stepped Columns

What is needed for a preliminary design procedure is a method of analysis that will provide suitable column stiffness estimates so that an exact indeterminate frame analysis procedure need be conducted only once. The model shown in Figure 16-12(a) has been found to give good results for crane loads, providing horizontal bracing is used in the final design. It is a "no-sway" model, consisting of a fixed base and supports introduced at the two points where the truss chords intersect the column.

The moment diagram obtained from the no-sway model for the 100-ton crane column shown in Figure 16-12(a) is shown in Figure 16-12(b).

Comparing Figure 16-12(b) to Figure 16-6, it can be seen that the general moment configuration is similar, and the magnitudes of moments are almost identical for the lower shaft. For preliminary design purposes, the two-support, no-sway model is adequate. The two-support, no-sway model is statically indeterminate to the second degree. Thus, even a preliminary design requires a complex analysis and certain other assumptions.

To obtain accurate values for moments, the effects of the nonuniform column properties must be included in the analysis. In doing a preliminary analysis of a stepped column, the substitution of a single top-hinge support to replace the two supports in the two-support, no-sway mode is often used. The single-hinged support is located at the intersection of the bottom chord and the column.

The simplified structure is depicted in Figure 16-13. Equations for the analysis of this member are given in Figure 16-14.

In each case, the equation for the top shear force is given. For the single-support assumption, the indeterminacy is eliminated once this shear force is known. The moment diagram for the single-hinge, no-sway column is evaluated using the equations provided in Figure 16-14. The moment diagram is shown in Figure 16-15.

While the variation in moment along the length is not in good agreement with that of the exact solution given in Figure 16-6, the values and signs of the moments at critical sections agree quite well.

There is one aspect of preliminary design that has not been discussed that is essential in the handling of the stepped- and double-column conditions. The non-prismatic nature of these column types requires input of the moment of inertia of the upper and lower segments of the column, which, of course, are not known initially. Therefore, some guidelines and/or methods are required to obtain reasonable values for I_1 and I_2.

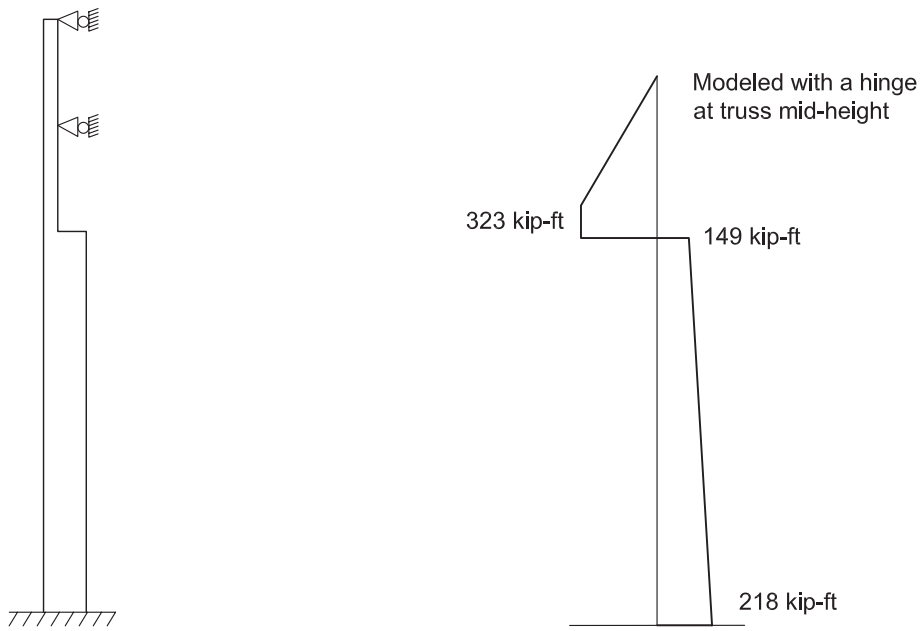

(a) no-sway computer model *(b) results of no-sway model*

Fig. 16-12. Stepped column modeling.

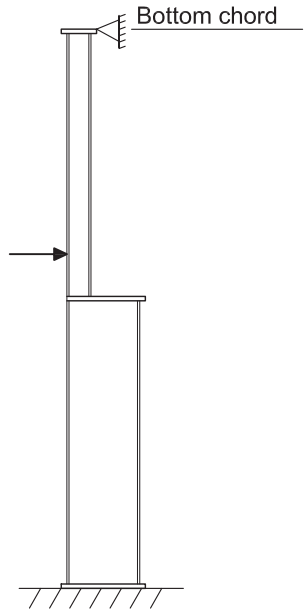

Fig. 16-13. Simplified structure.

Obtaining Trial Moments of Inertia for Stepped Columns

The upper segment of the stepped column may be sized by choosing a column section based on the axial load acting on the upper column portion. Use the appropriate unsupported length of the column in its weak direction, and determine a suitable column from the column tables in the AISC *Manual*.

Select a column about three sizes (by weight) larger to account for the bending in the upper shaft.

The size of the lower segment of the stepped column may be obtained by assuming that the gravity load from the crane is a concentric load applied to one flange (or flange-channel combination). Experience has shown that a preliminary selection may be made by choosing a member such that $A_{req'd} = P_2/0.40F_y$ (LRFD) or $A_{req'd} = P_2/0.25F_y$ (ASD), where $A_{req'd}$ is the area of one flange or flange plus channel combination. The depth of the lower shaft is typically determined by the crane clearance requirements, as shown in Figure 16-16.

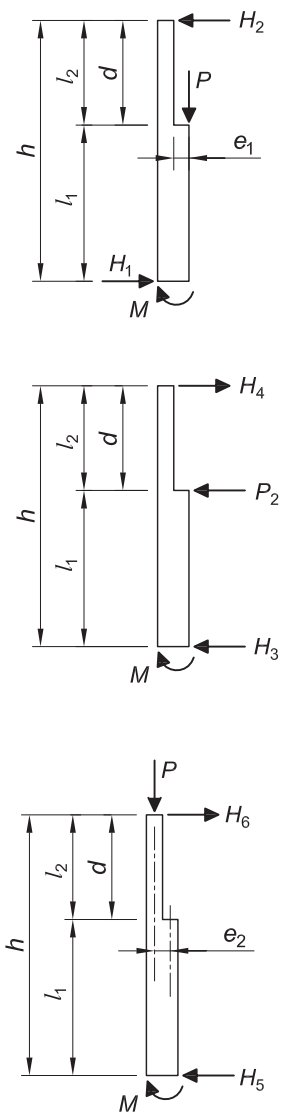

$$H_2 = \frac{3Pe_1(h^2 - d^2)}{2I_1\left(\frac{h^3}{I_1} - \frac{d^3}{I_1} + \frac{d^3}{I_2}\right)}$$

$$H_4 = \frac{P_2(2h^3 - 3dh^2 + d^3)}{2I_1\left(\frac{h^3}{I_1} - \frac{d^3}{I_1} + \frac{d^3}{I_2}\right)}$$

$$H_6 = \frac{3Pe_2(h^2 - d^2)}{2I_1\left(\frac{h^3}{I_1} - \frac{d^3}{I_1} + \frac{d^3}{I_2}\right)}$$

Fig. 16-14. Equations for simplified structure.

16.2.2 Double Columns (Laced or Tied)

The building column portion of a double column can again best be selected based on the axial load in the building column. Select the size of the crane column based on the crane gravity load applied to the "separate" crane column. The allowable stress of this portion will typically be based on the major axis of the column, assuming that the column is laced or battened to the building column to provide support about the weak axis. The actual size of the column should be increased slightly to account for the bending moments. The moment of inertia of the combined section can be calculated using standard formulas for geometric properties of built-up cross sections. If the moment of inertia of the combined section is obtained by assuming composite behavior, the lacing or batten plates connecting the two column sections must be designed and detailed accordingly.

16.2.3 Single Columns (Bracketed)

The sizes of bracketed columns are often controlled by wind; therefore, the design should first be made for wind and subsequently checked for wind plus crane. The preliminary design procedure for wind or seismic loads can be made by assuming an inflection point and selecting the preliminary column size to control sway under wind loads as shown in Figure 16-17. The approximate procedure is shown in the bracketed crane column design example in the next section.

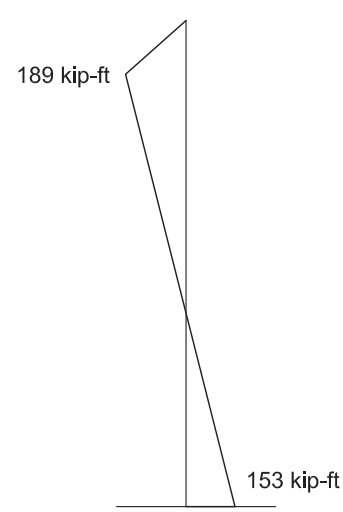

Fig. 16-15. Column moments using the equations in Figure 16-14.

AIST TR-13 recommends that bracket vertical loads should be limited to 50 kips.

16.3 FINAL DESIGN PROCEDURES

After obtaining the final forces and moments, the final design of the columns can be performed. The design of a crane column is unique in that the column has both a varying axial load and a concentrated moment at the location of the bracket or "step" in the column.

The best approach for prismatic bracketed columns or for stepped columns is to design the upper and lower portions of the columns as individual segments, with the top portion designed for P_1 and the associated upper column moments, and the lower portion designed for $P_1 + P_2$ and the lower column moments, as shown in Figure 16-18. The column can be considered laterally braced about the y-axis at the crane girder elevation.

AIST TR-13 recommends that the design of mill buildings be done in accordance with the AISC *Specification* provisions. The AISC *Specification* requires a second-order analysis to determine the forces and moments in the columns. With proper modeling and analysis of the structure, the complication of determining the effective length of the columns is eliminated. The effective length, K_x, for the column sections can be taken as 1.0, and moment magnifiers to take care of the P-δ requirements need not be used if the column sections are modeled with node points along the length of each column section.

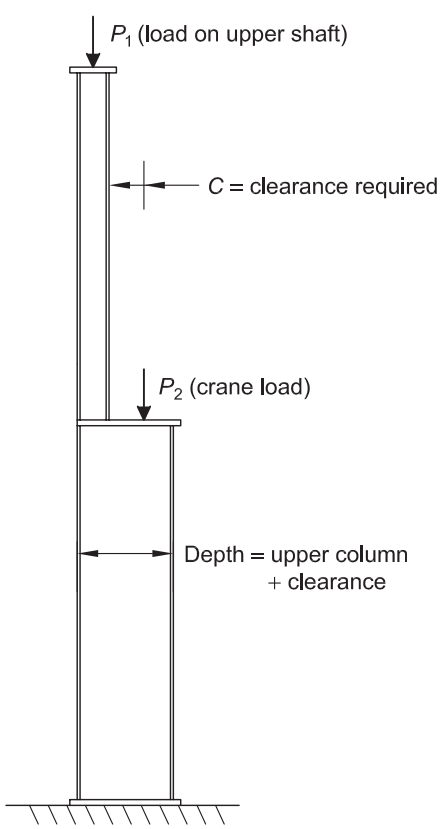

Fig. 16-16. Column clearance requirement.

Axial Compressive Strength

The majority of columns in mill buildings are nonslender, and therefore the nominal compressive strength, P_n, is determined based on the limit state of flexural buckling using AISC *Specification* Section E3.

Flexural Strength

For simple bending, the member is loaded in a plane parallel to a principal axis that passes through the shear center or is restrained against twisting at load points and supports. The nominal flexural strength, M_n, is the lower value obtained according to the limit states of yielding and lateral-torsional buckling using AISC *Specification* Section F2.

Combined Axial Force and Flexure

The interaction of required strengths for members subject to combined axial forces and flexure must satisfy the interaction equations of AISC *Specification* Chapter H.

AISC Design Aids

AISC *Manual* Table 6-2 provides available strengths of ASTM A992 W-shapes and may be of use when designing members with combined effects.

The following examples illustrate the column design procedure.

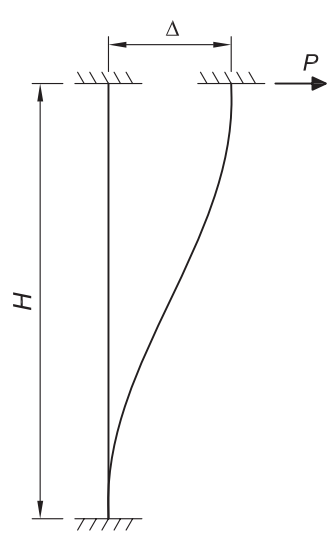

Fig. 16-17. Approximate sway calculation.

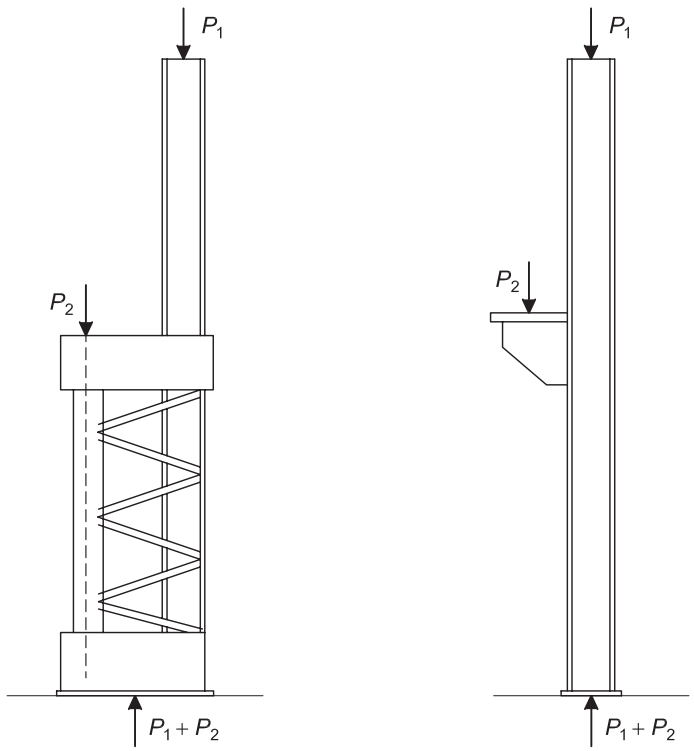

Fig. 16-18. Column loads.

Example 16.3.1—Bracketed Crane Column Design Example

Given:

Design the column shown in Figure 16-19 using ASTM A992 steel. The column loading is as follows:

D = 20 psf
L_r = 30 psf
C_{ds} = 20 kips (left-side column)
C_{vs} = 30 kips (left-side column)
C_{ds} = 20 kips (right-side column)
C_{vs} = 2 kips (right-side column)
C_{ss} = 3 kips

Solution:

Use the following AIST TR-13 load combinations:

LRFD: $1.2(D+C_{ds})+1.6(C_{vs}+C_{ss})+0.5L_r$

ASD: $D+C_{ds}+0.75(C_{vs}+C_{ss}+L_r)$

where

D = dead load

C_{ds} = crane dead load for a single crane with crane trolley positioned to produce the maximum load effect for the element in consideration; crane dead load includes weight of the crane bridge, end trucks, and trolley

C_{ss} = crane side thrust from a single crane

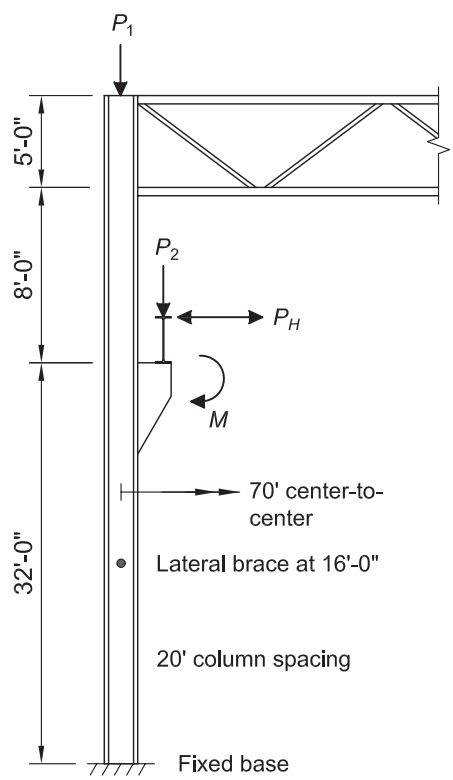

Fig. 16-19. Bracketed crane column example.

C_{vs} = crane lifted load for a single crane with crane trolley positioned to produce the maximum load effect for the element under consideration

L_r = roof live load

Nominal nodal loads on the truss:

$$P_D = (20 \text{ psf})(20 \text{ ft})(5 \text{ ft})(1 \text{ kip}/1{,}000 \text{ lb})$$
$$= 2.00 \text{ kips}$$

$$P_L = (30 \text{ psf})(20 \text{ ft})(5 \text{ ft})(1 \text{ kip}/1{,}000 \text{ lb})$$
$$= 3.00 \text{ kips}$$

Wind loads at eave:

$$P_w = 9.00 \text{ kips}$$

Ten year wind:

$$P_{w10} = 6.75 \text{ kips}$$

The column is laterally braced about the *y*-axis at the truss top chord and bottom chord and 16 ft above the floor.

Preliminary Design

Because this structure is quite tall, it is likely that lateral sway movement may control the column size. Thus, it is recommended that the preliminary design of the column be based on deflection considerations.

Base the allowable sway at the rail height on the minimum of $H/240$ or 1.0 in. Use a 10-year wind and/or the crane lateral load as the load criterion. The rail height is assumed to be 24 in. above the bracket.

For the wind load:

$$\frac{H}{240} = \frac{(45 \text{ ft})(12 \text{ in./ft})}{240}$$
$$= 2.25 \text{ in.}$$

For a fixed-fixed column with $P_{w10} = 6.75$ kips, the eave deflection is approximately:

$$\Delta = \frac{P_{w10}H^3}{24EI} \tag{16-1}$$

Assuming P_{w10} is divided equally between the windward and leeward columns:

$$I_x = \frac{(6.75 \text{ kips}/2)(45 \text{ ft})^3 (1{,}728 \text{ in.}^3/\text{ft}^3}{(24)(29{,}000 \text{ ksi})(1.0 \text{ in.})}$$
$$= 764 \text{ in.}^4$$

Try a W16×77. From AISC *Manual* Table 1-1:

$I_x = 1{,}110 \text{ in.}^4 > 764 \text{ in.}^4$ **o.k.**

The fixed-base frame model is shown in Figure 16-20. The vertical crane loads are located at nodes N27 and N29. The lateral crane loads are applied at nodes N28 and N30.

Member Properties

The following member sizes are used for columns and truss members:

Columns: W16×77
Truss top chord: WT7×34
Truss bottom chord: WT7×21.5
Truss web members: 2L3×3×5/16

Based on the model, the eave deflection determined from a first-order analysis due to a 10-year wind is 1.21 in. The deflection of the rail can then be determined:

$$\Delta_{rail} = \left(\frac{34 \text{ ft}}{45 \text{ ft}}\right)(1.21 \text{ in.})$$
$$= 0.914 \text{ in.}$$

Determine the deflection at the crane rail due to the crane vertical and horizontal loads using the model.

The model loads are:

Node N27:

$P_2 = 50$ kips
$M = -1{,}000$ kip-in. (based on an eccentricity of 8 in. + 12 in. = 20 in.)

Node N29:

$P_2 = 10$ kips
$M = 200$ kip-in. (based on an eccentricity of 8 in. + 12 in. = 20 in.)

Nodes N28 and N30:

$P_H = 3$ kips

P_1 is the summation of the roof loads ($D + L_r$) to each column. Design nodal loads are shown in Table 16-1.

Results indicate a deflection of 1.13 in. at the rail height.

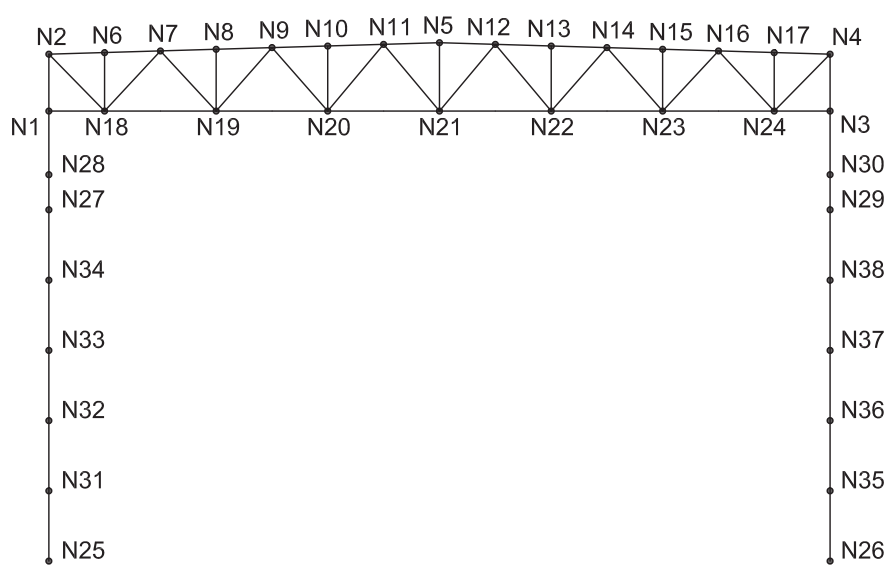

Fig. 16-20. Frame model.

Table 16-1. Design Nodal Loads		
Nodes	**LRFD**	**ASD**
N6-N17	$P_y = 1.2(-2.00\text{ kips}) + 0.5(-3.00\text{ kips})$ $= -3.90\text{ kips}$	$P_y = -2.00\text{ kips} + 0.75(-3.00\text{ kips})$ $= -4.25\text{ kips}$
N2 and N14	$P_y = \dfrac{-3.90\text{ kips}}{2}$ $= -1.95\text{ kips}$	$P_y = \dfrac{-4.25\text{ kips}}{2}$ $= -2.13\text{ kips}$
N27	$P_y = 1.2(-20.0\text{ kips}) + 1.6(-30.0\text{ kips})$ $= -72.0\text{ kips}$	$P_y = -20.0\text{ kips} + 0.75(-30.0\text{ kips})$ $= -42.5\text{ kips}$
N27	$M = (-72.0\text{ kips})(20.0\text{ in.})$ $= -1{,}440\text{ kip-in.}$	$M = (-42.5\text{ kips})(20.0\text{ in.})$ $= -850\text{ kip-in.}$
N29	$P_y = 1.2(-20.0\text{ kips}) + 1.6(-2.00\text{ kips})$ $= -27.2\text{ kips}$	$P_y = -20.0\text{ kips} + 0.75(-2.00\text{ kips})$ $= -21.5\text{ kips}$
N29	$M = (20.0\text{ in.})(27.2\text{ kips})$ $= 544\text{ kip-in.}$	$M = (20.0\text{ in.})(21.5\text{ kips})$ $= 430\text{ kip-in.}$
N28	$P_H = 1.6(3.00\text{ kips})$ $= 4.80\text{ kips}$	$P_H = 0.75(3.00\text{ kips})$ $= 2.25\text{ kips}$
N30	$P_H = 1.6(3.00\text{ kips})$ $= 4.80\text{ kips}$	$P_H = 0.75(3.00\text{ kips})$ $= 2.25\text{ kips}$

Check the Column Available Strength

A second-order elastic analysis is performed using the requirements of AISC *Specification* Chapter C. For ASD the loads must be multiplied by 1.6, the analysis performed, and the results divided by 1.6 to obtain the ASD results. The moments based on LRFD are shown in Figure 16-21(a). The results for ASD are shown in Figure 16-21(b).

By observation the lower shaft has higher force demands than the upper shaft; thus, the lower shaft will be checked.

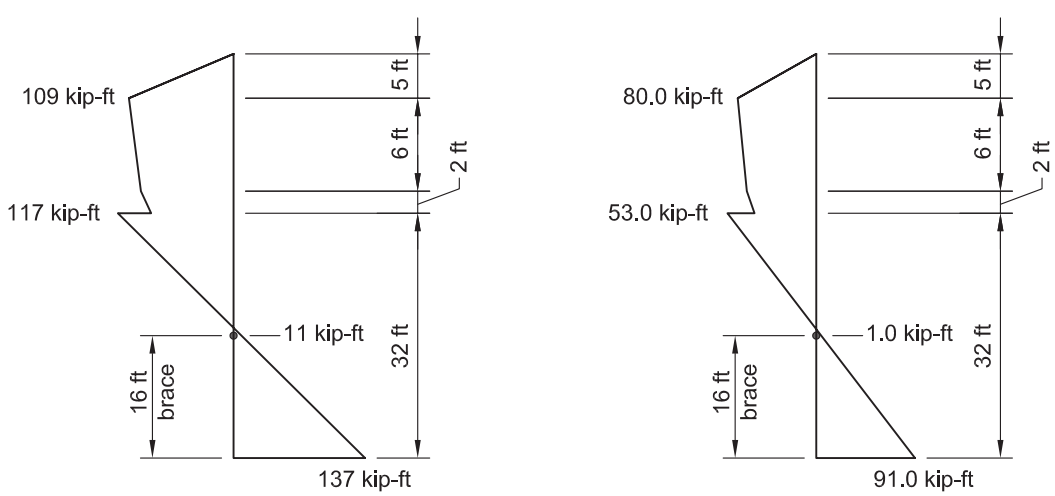

(a) LRFD *(b) ASD*

Fig. 16-21. Moment diagrams at right column.

For the fixed-base condition of the column, the effective length, L_c, is:

$$L_c = KL$$
$$= 0.5(32 \text{ ft})$$
$$= 16 \text{ ft}$$

LRFD	ASD
From the analysis: $P_u = 56.6$ kips $M_u = 137$ kip-ft From AISC *Manual* Table 6-2, for a W16×77 with $L_c = L_b = 16$ ft: $\phi_c P_n = 654$ kips $\phi_b M_{nx} = 482$ kip-ft From AISC *Specification* Section H1.1: $\frac{P_r}{P_c} = \frac{P_u}{\phi P_n}$ $= \frac{56.6 \text{ kips}}{654 \text{ kips}}$ $= 0.0865$ Because $P_r/P_c < 0.2$, use AISC *Specification* Equation H1-1b: $\frac{P_r}{2P_c} + \left(\frac{M_{rx}}{M_{cx}} + \frac{M_{ry}}{M_{cy}}\right) \le 1.0$ $\frac{0.0865}{2} + \left(\frac{137 \text{ kip-ft}}{482 \text{ kip-ft}} + 0\right) = 0.327 < 1.0$ **o.k.**	From the analysis: $P_a = 52.0$ kips $M_a = 91.0$ kip-ft From AISC *Manual* Table 6-2, for a W16×77 with $L_c = L_b = 16$ ft: $P_n/\Omega_c = 435$ kips $M_{nx}/\Omega_b = 321$ kip-ft From AISC *Specification* Section H1.1: $\frac{P_r}{P_c} = \frac{P_a}{P_n/\Omega}$ $= \frac{52.0 \text{ kips}}{435 \text{ kips}}$ $= 0.120$ Because $P_r/P_c < 0.2$, use AISC *Specification* Equation H1-1b: $\frac{P_r}{2P_c} + \left(\frac{M_{rx}}{M_{cx}} + \frac{M_{ry}}{M_{cy}}\right) \le 1.0$ $\frac{0.120}{2} + \left(\frac{91.0 \text{ kip-ft}}{321 \text{ kip-ft}} + 0\right) = 0.343 < 1.0$ **o.k.**

Because the member is adequate using $C_b = 1.0$, there is no need to refine the calculations for a calculated C_b.

Example 16.3.2—Stepped Crane Column Design Example

Given:

Design the column shown in Figure 16-22 using ASTM A992 steel. The column loading is as follows:

$D = 20$ psf
$L_r = 30$ psf
$C_{ds} = 20$ kips (left-side column)
$C_{vs} = 30$ kips (left-side column)
$C_{ds} = 20$ kips (right-side column)
$C_{vs} = 2$ kips (right-side column)
$C_{ss} = 3$ kips

Solution:

Use the following AIST TR-13 load combinations:

LRFD: $1.2(D + C_{ds}) + 1.6(C_{vs} + C_{ss}) + 0.5L_r$

ASD: $D + C_{ds} + 0.75(C_{vs} + C_{ss} + L_r)$

Nominal nodal loads on the truss:

$$P_D = (20\text{ psf})(20\text{ ft})(5\text{ ft})(1\text{ kip}/1{,}000\text{ lb})$$
$$= 2.00\text{ kips}$$

$$P_L = (30\text{ psf})(20\text{ ft})(5\text{ ft})(1\text{ kip}/1{,}000\text{ lb})$$
$$= 3.00\text{ kips}$$

Wind loads at eave:

$$P_w = 9.00\text{ kips}$$

Ten-year wind:

$$P_{w10} = 6.75\text{ kips}$$

The column is laterally braced about the y-axis at the truss top chord and bottom chord and 16 ft above the floor.

Preliminary Design

The crane load axial force is 50 kips (unfactored). For the top column section, the unbraced length is 8 ft.

Estimate the flange area based on the crane vertical load.

$$P_2 = 50.0\text{ kips}$$

$$A_{req'd} = \frac{P_2}{0.25F_y}\ \text{(ASD)}$$
$$= \frac{50.0\text{ kips}}{0.25(50\text{ ksi})}$$
$$= 4.00\text{ in.}^2$$

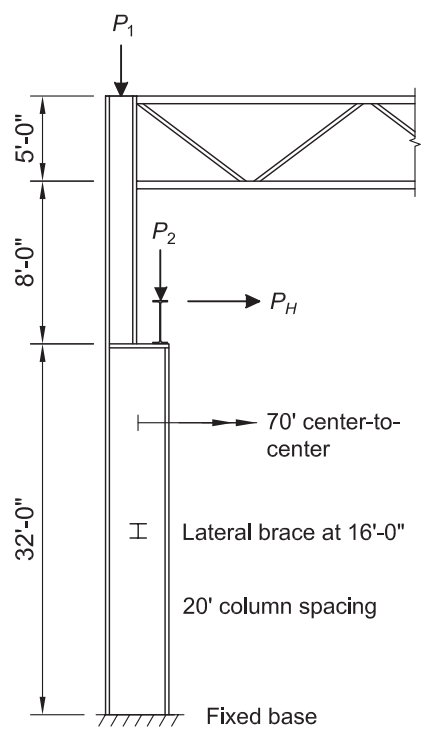

Fig. 16-22. Stepped crane column example.

Estimate the section for the top column to be a W12×65.

A W24 section is required for the bottom column section for crane clearance; try a W24×68.

From AISC *Manual* Table 1-1:

$b_f = 8.97$ in.

$t_f = 0.585$ in.

$$A_{flange} = b_f t_f$$
$$= (8.97 \text{ in.})(0.585 \text{ in.})$$
$$= 5.25 \text{ in.}^2$$

The fixed-base frame model is shown in Figure 16-23. The vertical crane loads are located at nodes N27 and N29. The lateral crane loads are applied at nodes N28 and N30.

Trial Member Properties

The following member sizes are used for columns and truss members:

Upper-shaft columns: W12×65
Lower-shaft column: W24×68
Truss top chord: WT7×34
Truss bottom chord: WT7×21.5
Truss web members: 2L3×3×5/16

The model loads are:

Node N27:

$P_2 = 50$ kips
$M = -600$ kip-in. (based on an eccentricity of 12 in.)

Node N29:

$P_2 = 10$ kips
$M = 120$ kip-in. (based on an eccentricity of 12 in.)

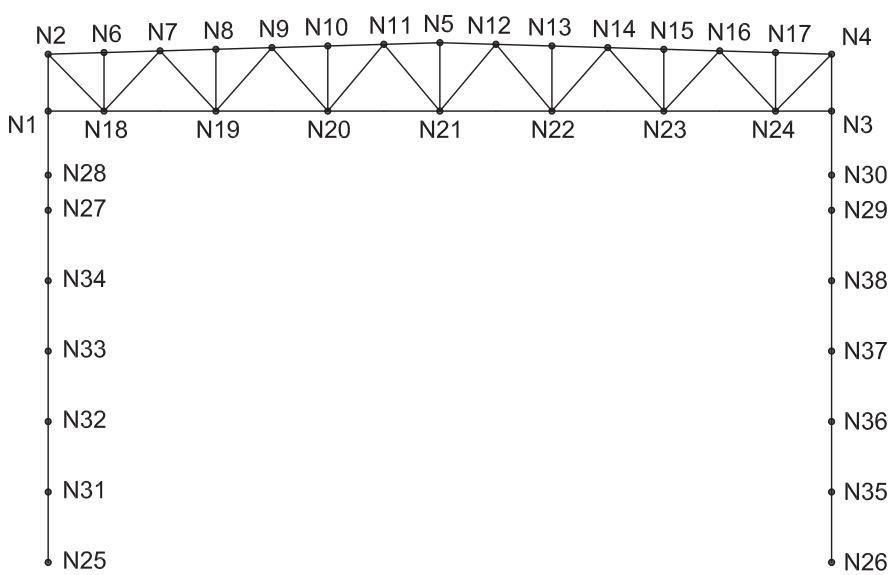

Fig. 16-23. Frame model.

Table 16-2. Design Nodal Loads		
Nodes	**LRFD**	**ASD**
N6–N17	$P_y = 1.2(-2.00 \text{ kips}) + 0.5(-3.00 \text{ kips})$ $= -3.90 \text{ kips}$	$P_y = -2.00 \text{ kips} + 0.75(-3.00 \text{ kips})$ $= -4.25 \text{ kips}$
N2 and N4	$P_y = \dfrac{-3.90 \text{ kips}}{2}$ $= -1.95 \text{ kips}$	$P_y = \dfrac{-4.25 \text{ kips}}{2}$ $= -2.13 \text{ kips}$
N27	$P_y = 1.2(-20.0 \text{ kips}) + 1.6(-30.0 \text{ kips})$ $= -72.0 \text{ kips}$	$P_y = -20.0 \text{ kips} + 0.75(-30.0 \text{ kips})$ $= -42.5 \text{ kips}$
N27	$M = (20.0 \text{ in.})(-72.0 \text{ kips})$ $= -1{,}440 \text{ kip-in.}$	$M = (20.0 \text{ in.})(-42.5 \text{ kips})$ $= -850 \text{ kip-in.}$
N29	$P_y = 1.2(-20.0 \text{ kips}) + 1.6(-2.00 \text{ kips})$ $= -27.2 \text{ kips}$	$P_y = -20.0 \text{ kips} + 0.75(-2.0 \text{ kips})$ $= -21.5 \text{ kips}$
N29	$M = (20.0 \text{ in.})(27.2 \text{ kips})$ $= 544 \text{ kip-in.}$	$M = (20.0 \text{ in.})(21.5 \text{ kips})$ $= 430 \text{ kip-in.}$
N28	$P_H = 1.6(3.00 \text{ kips})$ $= 4.80 \text{ kips}$	$P_H = 0.75(3.00 \text{ kips})$ $= 2.25 \text{ kips}$
N30	$P_H = 1.6(3.00 \text{ kips})$ $= 4.80 \text{ kips}$	$P_H = 0.75(3.00 \text{ kips})$ $= 2.25 \text{ kips}$

Nodes N28 and N30:

$P_H = 3$ kips

P_1 is the summation of the roof loads ($D + L_r$) to each column. Design nodal loads are shown in Table 16-2.

Ignore the eccentricity of the upper shaft on the lower shaft ($e = 6$ in.)

Determine the deflection at the crane rail due to the crane vertical and lateral crane loads using the model.

Based on the model, the eave deflection from a first-order analysis due to the 10-year wind is 1.16 in.

Results indicate a deflection of 0.98 in. at the rail height. **o.k.**

Check the Column Available Strength

A second-order elastic analysis is performed using the requirements of AISC *Specification* Chapter C. For ASD the loads must be multiplied by 1.6, the analysis performed, and the results divided by 1.6 to obtain the ASD results. The moments based on LRFD are shown in Figure 16-24(a). The results for ASD are shown in Figure 16-24(b).

Lower Shaft—W24×68

For the fixed-base condition of the column, the effective length, L_c, is:

$$\begin{aligned} L_c &= KL \\ &= 0.5(32 \text{ ft}) \\ &= 16 \text{ ft} \end{aligned}$$

LRFD	ASD
From the analysis: $P_u = 56.0$ kips $M_u = 215$ kip-ft From AISC *Manual* Table 6-2, for a W24×68 with $L_c = L_b = 16$ ft: $\phi_c P_n = 418$ kips $\phi_b M_{nx} = 465$ kip-ft From AISC *Specification* Section H1.1: $\frac{P_r}{P_c} = \frac{P_u}{\phi P_n} = \frac{56.0 \text{ kips}}{418 \text{ kips}} = 0.134$ Because $P_r/P_c < 0.2$, use AISC *Specification* Equation H1-1b: $\frac{P_r}{2P_c} + \left(\frac{M_{rx}}{M_{cx}} + \frac{M_{ry}}{M_{cy}}\right) \le 1.0$ $\frac{0.134}{2} + \left(\frac{215 \text{ kip-ft}}{465 \text{ kip-ft}} + 0\right) = 0.529 < 1.0$ **o.k.**	From the analysis: $P_a = 52.1$ kips $M_a = 128$ kip-ft From AISC *Manual* Table 6-2, for a W24×68 with $L_c = L_b = 16$ ft: $P_n/\Omega_c = 278$ kips $M_{nx}/\Omega_b = 309$ kip-ft From AISC *Specification* Section H1.1: $\frac{P_r}{P_c} = \frac{P_a}{P_n/\Omega} = \frac{52.1 \text{ kips}}{278 \text{ kips}} = 0.187$ Because $P_r/P_c < 0.2$, use AISC *Specification* Equation H1-1b: $\frac{P_r}{2P_c} + \left(\frac{M_{rx}}{M_{cx}} + \frac{M_{ry}}{M_{cy}}\right) \le 1.0$ $\frac{0.187}{2} + \left(\frac{128 \text{ kip-ft}}{309 \text{ kip-ft}} + 0\right) = 0.508 < 1.0$ **o.k.**

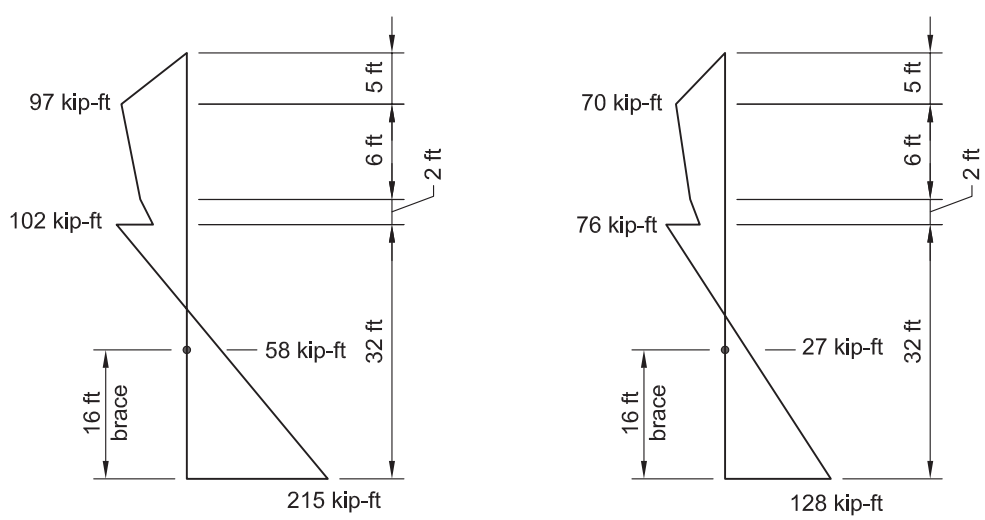

(a) LRFD *(b) ASD*

Fig 16-24. Moment diagrams at right column.

Because the member is adequate using C_b =1.0, there is no need to refine the calculations for a calculated C_b.

Upper Shaft—W12×65

For the pinned-base condition of the column, the effective length, L_c, is:

$$\begin{aligned} L_c &= KL \\ &= 1.0(8\text{ ft}) \\ &= 8\text{ ft} \end{aligned}$$

LRFD	ASD
From the analysis: $P_u = 29.0$ kips $M_u = 97.0$ kip-ft From AISC *Manual* Table 6-2, for a W12×65 with $L_c = L_b = 8$ ft: $\phi_c P_n = 798$ kips $\phi_b M_{nx} = 356$ kip-ft From AISC *Specification* Section H1.1: $\frac{P_r}{P_c} = \frac{P_u}{\phi P_n} = \frac{29.0\text{ kips}}{798\text{ kips}} = 0.0363$ Because $P_r/P_c < 0.2$, use AISC *Specification* Equation H1-1b: $\frac{P_r}{2P_c} + \left(\frac{M_{rx}}{M_{cx}} + \frac{M_{ry}}{M_{cy}}\right) \le 1.0$ $\frac{0.0363}{2} + \left(\frac{97.0\text{ kip-ft}}{356\text{ kip-ft}} + 0\right) = 0.291 < 1.0$ **o.k.**	From the analysis: $P_a = 30.6$ kips $M_a = 68.5$ kip-ft From AISC *Manual* Table 6-2, for a W12×65 with $L_c = L_b = 8$ ft: $P_n/\Omega_c = 531$ kips $M_{nx}/\Omega_b = 237$ kip-ft From AISC *Specification* Section H1.1: $\frac{P_r}{P_c} = \frac{P_a}{P_n/\Omega} = \frac{30.6\text{ kips}}{531\text{ kips}} = 0.0576$ Because $P_r/P_c < 0.2$, use AISC *Specification* Equation H1-1b: $\frac{P_r}{2P_c} + \left(\frac{M_{rx}}{M_{cx}} + \frac{M_{ry}}{M_{cy}}\right) \le 1.0$ $\frac{0.0576}{2} + \left(\frac{68.5\text{ kip-ft}}{237\text{ kip-ft}} + 0\right) = 0.318 < 1.0$ **o.k.**

16.4 ECONOMIC CONSIDERATIONS

Although it is not possible to provide a clear-cut rule of thumb as to the most economical application of the various crane columns—that is, bracketed, stepped, or separate crane column, due to differences in shop techniques—it is possible to generalize them to some degree.

The stepped column will be economical if it is clean—that is, fabricated without a face channel or extra welded attachments, as shown in Figure 16-25. In fact, for many jobs, a clean stepped column can prove economical as compared to the bracketed column, even for light loads. Also, the cap plate can be made thick enough to eliminate the need for a stiffener under the upper shaft's interior flange.

Separate crane columns are economical for heavy cranes. Fabricators favor tying the crane column to the building column with short W-shapes acting as a diaphragm as opposed to a lacing system using angles, as shown in Figure 16-26.

Lacing systems are economical as compared to the diaphragm system if miscellaneous framing pieces are not required. For example, if the building column flange width is equal to the crane column depth, the columns can be laced economically using facing angles, as shown in Figure 16-27.

Bracketed columns are generally most efficient up to bracket loads of 25 kips. Crane reactions between 25 kips and 50 kips may best be handled by either a bracketed column or a stepped column.

If the area of one flange of a stepped column multiplied by $0.5F_y$ is less than the crane load on the column, a separate crane column should definitely be considered.

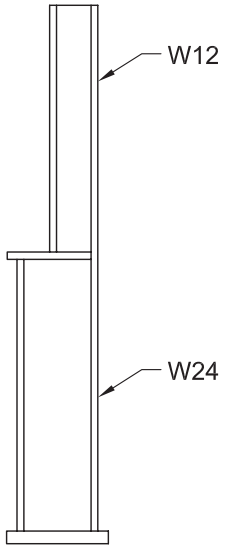

Fig. 16-25. "Clean" column.

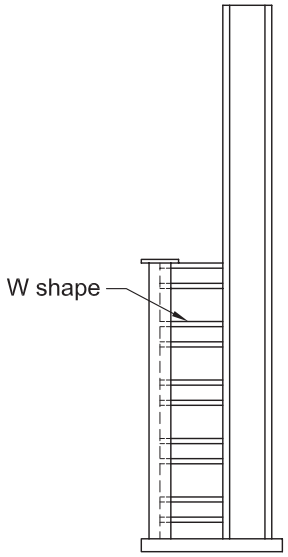

Fig. 16-26. Connections with W-shapes.

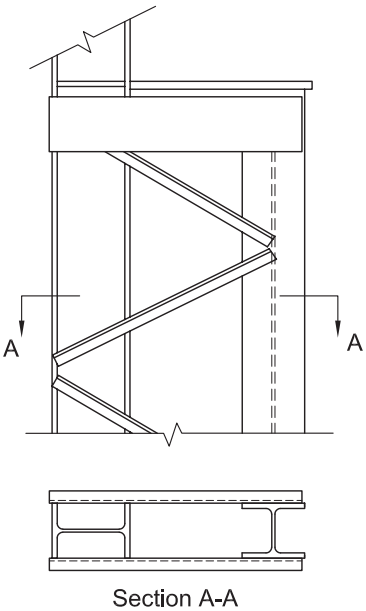

Fig.16-27. Laced columns (box plates not shown).

Chapter 17
Other Crane Considerations

17.1 OUTSIDE CRANES

Outside cranes are common in many factories for scrap handling, parts handling, and numerous other operations. There are several important aspects of outside crane usage that are unique to that type of crane.

1. The exterior exposure in many climates requires that extra attention be given to painting and general maintenance, material thickness, and the elimination of pockets that would collect moisture.
2. Due to drive aisles, railways, and other similar restrictions, exterior cranes often require longer spans than interior cranes. The outside crane has no building columns from which to derive lateral support. Therefore, long, unbraced spans are more common in these installations. Horizontal bracing trusses, wide-truss columns, or other bracing elements must often be employed to achieve stability.
3. Long spans may dictate that trusses, rather than plate girders or rolled sections, be used for the runway beams. This can have certain advantages, including improved stiffness. The disadvantages are clearly the increased depth plus joints that are highly susceptible to fatigue problems. Secondary stresses must be calculated and included in the fatigue analysis for trusses used as crane girders.
4. Another special girder that may be appropriate for use in these long-span applications is the trussed girder. This "hybrid" involves the coupling of a girder (top flange) and a truss. The member can develop excellent stiffness characteristics and many times can temporarily support the crane weight even if a truss member is damaged. As with the basic truss, the overall greater depth is a disadvantage.
5. Still another solution to the long-span problem may lie in the use of "box" or "semi-box" girders. An excellent reference on this subject was developed by Schlenker (1972). These girders have excellent lateral and torsional strength. In addition, the problem associated with off-center crane rails is eliminated; however, internal diaphragm plates are generally required to keep the box square during fabrication and will reduce fatigue life if not properly designed for fatigue.
6. Brittle fracture should be considered for cranes operating in low-temperature environments.

17.2 UNDERHUNG CRANES

Underhung cranes in industrial buildings are very common and quite often prove to be economical for special applications. Underhung cranes are characterized by the fact that the end trucks and the bridge are supported from the structure above. Underhung cranes are generally used for less severe applications and for lighter loads as compared to overhead cranes. One of the distinct operational advantages that underhung cranes possess is that they can be arranged to provide for trolley transfer from one runway or aisle to another. Proper provision in the design must be made for handling lateral and impact loads from underhung cranes. The concepts presented in this Guide regarding load transfer are, in general, applicable to underhung crane systems. Because these cranes are generally supported by roof members, load is not transferred directly to the columns, and therefore, the column design does not involve the moment distribution problems of the top-running crane column. Particular attention should be paid to the method of hanging the cranes. Fatigue problems with these connections have existed in the past, and proper provisions must be made with the hanging connection to guarantee adequate service life.

Hanger systems should provide for vertical adjustment to properly adjust the elevation of the runway beam. After the runways are positioned vertically, a lateral anti-sway brace should be attached. The sway brace prevents the hanger system from flexing perpendicular to the runway. Lateral braces should only be provided on one side of the hanger system as shown in Figure 17-1. This keeps the crane in alignment and prevents lateral forces from being generated on the hangar system as the crane travels up and down on the runway. Most hanger systems fatigue at a relatively low stress level if they are allowed to sway. In addition to the lateral anti-sway braces, longitudinal braces should be installed parallel to the runway beams to prevent sway along the length of the runway. These braces should be placed at approximately 100-ft intervals and at all turns in the runway.

Runway splices can be accomplished in many ways. The splice should allow for a smooth-running crane as the wheels transfer from one beam to the next. A typical splice detail is shown in Figure 17-2.

Especially for higher usage underhung cranes, periodic inspection of the bottom flange must be undertaken to ensure that the wear of the running surface does not compromise the structural integrity of the wheel support.

Many crane suppliers prefer to supply the runway beams. The building designer must carefully coordinate hanger

locations and hanger reactions with the crane supplier. Many times, the structure must be designed prior to the selection of the crane system, and the hanger locations and reactions must be estimated by the building designer. Hanger reactions can be calculated from manufacturer's catalogs. Hangers should be provided at a 15- to 20-ft spacing if possible. The deflection limit for underhung crane runway beams due to wheel loads should be limited to span divided by 450.

In addition to the various AISC *Specification* checks that must be made for the design of underhung crane beams, a bottom flange localized combined stress check must be made to determine the effects of the wheel contact load on the bottom flange. The effect of the concentrated wheel load can be to "cold work" the steel in the bottom flange, which in the long term can result in autofrettage, cracking, and break-off of portions of the bottom flange. Contained in the CMAA *Specification for Top Running and Under Running Single Girder Electric Overhead Cranes Utilizing Under Running Trolley Hoists—No. 74* (CMAA, 2015b) is a suggested design approach for the examination of the wheel contact stresses.

Monorail cranes are similar in nature to underhung cranes except they are used to transport materials in prescribed paths.

If open web steel joists are used to support the hangers, special joists must be designated at the support hangers. The manufacturer could be asked to mark the special joists to avoid confusion in the field between the special crane support joists and the typical joists.

The crane beam and monorail support hangers must load the joist at a panel point; otherwise, concentrated load reinforcement must be provided or the manufacturer must design the joist chord for the induced bending. The hangers should allow for vertical adjustment. This will allow the crane beams to be leveled after the roofing has been applied and the dead load deflection of the roof system has occurred. The vertical adjustability of the hangers will also accommodate the differences in elevation caused by fabrication and erection tolerances.

Care should be taken in the design and detailing of the lateral braces. The brace is intended to resist lateral load; however, the brace may inadvertently pick up some of the

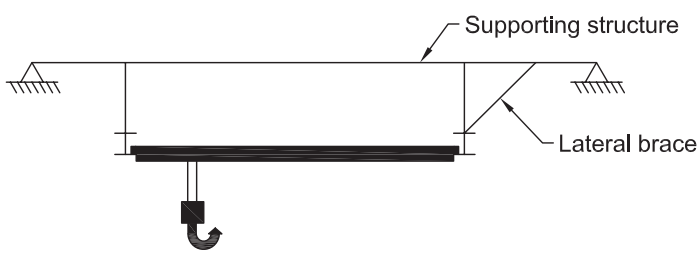

Fig. 17-1. Underhung crane support system.

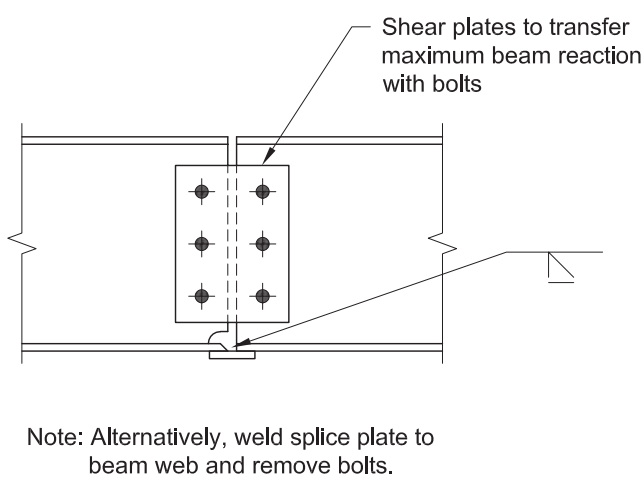

Fig. 17-2. Underhung crane beam splice.

vertical load depending on its stiffness relative to the vertical hangers. Because the hangers and the lateral brace are not located precisely at a panel point, their loads and locations must be supplied to the joist manufacturer.

If the crane runway support beams are parallel to the joists, the lateral brace will have to extend to the top chord of an adjacent joist, and horizontal members will have to be added directly under the deck to transfer the thrust load into the roof deck. A typical hanger and brace for this situation are illustrated in Figure 17-3. When the runway support beams are perpendicular to the joist, a detail similar to that shown in Figure 17-4 may be appropriate.

The tractive longitudinal force at each runway is typically specified as 10% of the total maximum wheel loads supported by that side of the runway. The longitudinal force created by the crane hitting the crane stops may exceed the tractive longitudinal force. The stopping force is a function of the crane travel speed and the length of stroke of the crane bumper. This bumper force can be controlled by the selection of the bumper. The resulting load to the support system should be coordinated between the engineer and the crane supplier. A bracing system is required to resist the longitudinal crane force. If the crane runway runs parallel to the joists, the longitudinal thrusts are transferred through the joist diagonals to the top chord and into the roof deck. The typical hanger detail will require modification to also transfer the longitudinal load into the joist.

Clamp-type hangers may be used to attach hangers to the bottom chord of joists. However, the engineer must design the clamps to avoid bending the outstanding legs of the joist

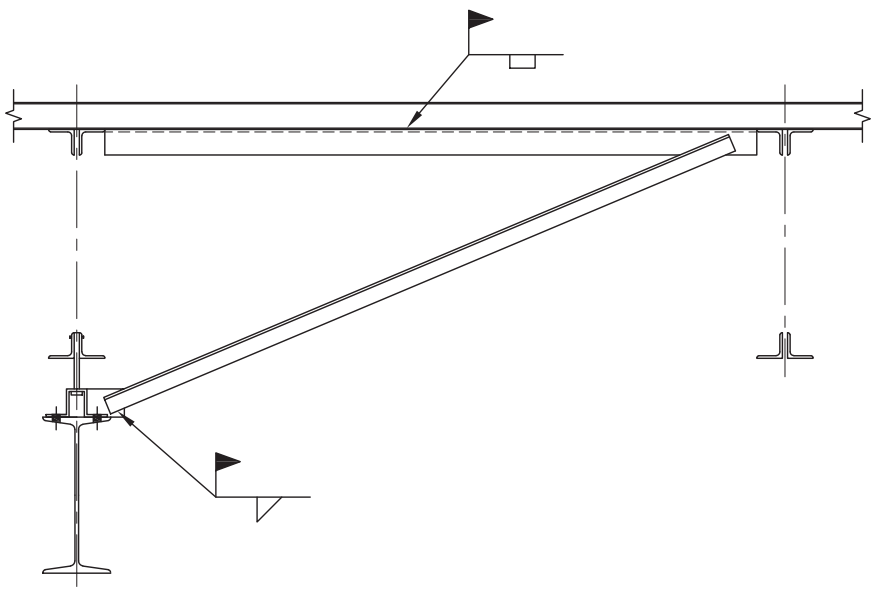

Fig. 17-3. Runway support beams parallel to joists.

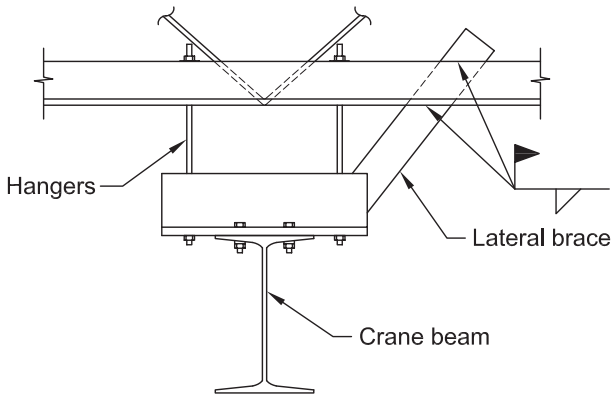

Fig. 17-4. Typical hanger at joist.

chord. Clamps and hangers are not part of the components designed and supplied by the joist manufacturer.

Depending on the trolley location, either the left or right hanger load may be larger. Given the shifting shear and moment diaphragm created by the possible crane loading conditions, the use of KCS series (constant-shear) joists should be considered for this situation.

17.3 MAINTENANCE AND REPAIR

As stated earlier, crane buildings require an extra measure of maintenance. Crane rail alignment is especially critical. Wear on the crane and rail and potential fatigue problems can result if proper maintenance is not provided. Crane rails must also be inspected for uneven bearing to minimize fatigue problems.

If fatigue cracks occur and must be repaired, the repair procedure may create additional problems if proper procedures are not taken. Simple welding of doubler plates, stiffeners, or other reinforcement may create a "notch effect" that could be more serious than the original problem. Engineers should use common sense in detailing procedures for repair of fatigue cracks. In particular, they should not worsen the fatigue problem with the repair. Referral to AISC *Specification* Appendix 3 is essential.

Chapter 18
Summary and Design Procedures

Many concepts have been presented in this Guide relative to the design and analysis of structural frames for crane buildings. In an effort to optimize design time, the following procedural outline has been developed for the designer:

1. Determine the best geometrical layout for the building in question.
2. Design the crane girders and determine column and frame forces from the crane loads.
3. Perform preliminary design of the crane columns.
4. Design the roof trusses or roof beams for dead loads and live loads.
5. Determine all loading conditions for which the entire frame must be analyzed.
6. Analyze the frame in question for dead, live, wind, and seismic loads. This analysis should be performed without load sharing from the adjacent frames and determine the lateral stiffness of the frame.
7. Analyze the frame (considering load sharing) for crane loads when horizontal trusses are used.
8. Combine moments and forces from the two analyses for subsequent design.
9. Perform the final design of columns, trusses, braces, and details.

Appendix

Table A-1. W-Shapes with Cap Channels: Section Properties										
W-Shape	Channel	Total Wt., lb/ft	Axis X-X					Axis Y-Y		
			I_x, in.^{4}	S_1, in.^{3}	S_2, in.^{3}	y_1, in.	Z_x, in.^{3}	I_t, in.^{4}	S_{yt}, in.^{3}	Z_{yt}, in.^{3}
W36×150	MC18×42.7	193	12000	553	831	21.8	738	689	76.6	109
	C15×33.9	184	11500	546	764	21.1	716	450	60.1	84.6
W33×141	MC18×42.7	184	10000	490	750	20.4	652	676	75.1	106.8
	C15×33.9	175	9580	484	689	19.8	635	437	58.2	82.5
W33×118	MC18×42.7	161	8280	400	656	20.7	544	648	72.0	99.6
	C15×33.9	152	7900	395	596	20.0	529	409	54.5	75.3
W30×116	MC18×42.7	159	6900	365	598	18.9	492	636	70.7	98.5
	C15×33.9	150	6590	360	544	18.3	480	397	52.9	74.2
W30×99	MC18×42.7	142	5830	304	533	19.2	412	619	68.7	93.6
	C15×33.9	133	5550	300	481	18.5	408	380	50.6	69.3
W27×94	C15×33.9	128	4530	268	435	16.9	357	377	50.3	69.4
W27×84	C15×33.9	118	4050	237	403	17.1	316	368	49.0	66.7
W24×84	C15×33.9	118	3340	217	367	15.4	286	362	48.3	66.5
	C12×20.7	105	3030	211	302	14.3	275	176	29.4	41.3
W24×68	C15×33.9	102	2710	173	321	15.7	232	350	46.7	62.6
	C12×20.7	88.7	2440	168	258	14.5	224	164	27.4	37.4
W21×68	C15×33.9	102	2180	156	287	13.9	207	347	46.3	62.5
	C12×20.7	88.7	1970	152	232	12.9	200	161	26.9	37.3
W21×62	C15×33.9	95.9	2000	142	272	14.1	189	344	45.8	61.2
	C12×20.7	82.7	1800	138	218	13.0	183	158	26.3	36.0
W18×50	C15×33.9	83.9	1250	100	211	12.5	133	335	44.7	58.8
	C12×20.7	70.7	1120	97.3	166	11.5	127	149	24.8	33.6
W16×36	C15×33.9	69.9	748	64.5	160	11.6	86.8	327	43.6	56.1
	C12×20.7	56.7	670	62.8	123	10.7	83.2	141	23.5	30.9
W14×30	C12×20.7	50.7	447	46.7	98.1	9.57	62.0	139	23.1	30.0
	C10×15.3	45.3	420	46.0	84.5	9.11	60.3	77.1	15.4	20.3
W12×26	C12×20.7	46.7	318	36.8	82.1	8.63	48.2	138	22.9	29.6
	C10×15.3	41.3	299	36.3	70.5	8.22	47.0	76.0	15.2	19.9

y_1 = distance from the bottom of the tension flange to the elastic neutral axis, in.

Table A-2. W-Shapes with Cap Channels: Lateral-Torsional Buckling Properties						
W Shape	**Channel**	**r_t, in.**	**h_o, in.**	**F_L, ksi**	**L_p, in.**	**L_r, in.**
W36×150	MC18×42.7	5.09	35.0	33.3	135	503
	C15×33.9	4.32	35.0	35.0	115	417
W33×141	MC18×42.7	5.09	32.4	32.7	135	514
	C15×33.9	4.31	32.4	35.0	114	420
W33×118	MC18×42.7	5.28	32.1	30.5	140	541
	C15×33.9	4.45	32.2	33.1	118	436
W30×116	MC18×42.7	5.21	29.2	30.5	138	545
	C15×33.9	4.36	29.1	33.1	115	438
W30×99	MC18×42.7	5.39	29.3	28.5	143	573
	C15×33.9	4.50	29.0	31.2	119	457
W27×94	C15×33.9	4.47	26.1	30.8	118	465
W27×84	C15×33.9	4.56	26.0	29.4	121	481
W24×84	C15×33.9	4.47	23.3	29.6	118	486
	C12×20.7	3.49	23.3	34.9	93.0	346
W24×68	C15×33.9	4.65	23.1	26.9	123	518
	C12×20.7	3.62	23.0	32.6	96.0	361
W21×68	C15×33.9	4.58	20.4	27.2	121	529
	C12×20.7	3.55	20.4	32.8	94.0	366
W21×62	C15×33.9	4.66	20.3	26.1	123	543
	C12×20.7	3.61	20.3	31.7	96.0	373
W18×50	C15×33.9	4.76	17.5	23.7	126	636
	C12×20.7	3.67	17.5	29.3	97.0	427
W16×36	C15×33.9	4.95	15.3	20.2	131	700
	C12×20.7	3.85	15.3	25.5	102	451
W14×30	C12×20.7	3.92	13.3	23.8	104	491
	C10×15.3	3.21	13.3	27.2	85.0	366
W12×26	C12×20.7	3.96	11.7	22.4	105	537
	C10×15.3	3.24	11.7	25.7	86.0	395

F_L calculated using AISC *Specification* Equation F4-6a/F4-6b.
L_p calculated using AISC *Specification* Equation F4-7.
L_r calculated using AISC *Specification* Equation F4-8.

References

ACI Committee 360 (2010), *Design of Slabs-on-Ground*, ACI 360R-10, American Concrete Institute, Farmington Hills, Mich.

ACI (2014*), Building Code Requirements for Structural Concrete and Commentary*, ACI 318-14 and ACI 318M-14, American Concrete Institute, Farmington Hills, Mich.

ACI (2015), *Guide for Concrete Floor and Slab Construction*, ACI 302.1R-15, American Concrete Institute, Farmington Hills, Mich.

AISC (1989), *Specification for Structural Steel Buildings—Allowable Stress Design and Plastic Design*, American Institute of Steel Construction, Chicago, Ill.

AISC (2009), *Detailing for Steel Construction*, 3rd Ed., American Institute of Steel Construction, Chicago, Ill.

AISC (2016a), *Code of Standard Practice for Steel Buildings and Bridges*, ANSI/AISC 303-16, American Institute of Steel Construction, Chicago, Ill.

AISC (2016b), *Specification for Structural Steel Buildings*, ANSI/AISC 360-16, American Institute of Steel Construction, Chicago, Ill.

AISC (2017), *Steel Construction Manual*, 15th Ed., American Institute of Steel Construction, Chicago, Ill.

AISI (2000), *A Design Guide for Standing Seam Roof Panels*, Committee on Specifications for the Design of Cold-Formed Steel Structural Members, American Iron and Steel Institute, Washington, D.C.

AISI (2009), *Design Guide for Cold-Formed Steel Purlin Roof Framing Systems*, American Iron and Steel Institute, Washington, D.C.

AISI (2016a), *North American Specification for the Design of Cold-Formed Steel Structural Members*, AISI S100-16, American Iron and Steel Institute, Washington, D.C.

AISI (2016b), *North American Standard for the Design of Profiled Steel Diaphragm Panels*, American Iron and Steel Institute, Washington, D.C.

AIST (2003), *Guide for the Design and Construction of Mill Buildings*, AIST TR-13, Association for Iron and Steel Technology, Warrendale, Pa.

AIST (2018), *Specification for Electric Overhead Traveling Cranes for Steel Mill Service*, AIST TR-06, Association for Iron and Steel Technology, Warrendale, Pa.

ASCE (2014), *Design Loads on Structures During Construction*, ASCE 37-14, American Society of Civil Engineers, Reston, Va.

ASCE (2016), *Minimum Design Loads and Associated Criteria for Buildings and Other Structures*, ASCE/SEI 7-16, American Society of Civil Engineers, Reston, Va.

ASTM (2019), *Selected ASTM Standards for Structural Steel Fabrication*, ASTM International, West Conshohocken, Pa.

ASHRAE (2013), *Energy Efficient Design of New Buildings Except Low-Rise Residential Buildings*, ASHRAE 90.1, American Society of Heating, Refrigerating and Air-Conditioning Engineers, Atlanta, Ga.

AWS (2015), *Structural Welding Code—Steel,* AWS D1.1/D1.1M:2015, American Welding Society, Miami, Fla.

BCA (2015), *National Construction Code*, Building Code of Australia, Canberra, Australia.

Chen, S. and Tong, G. (1994), "Design for Stability: Correct Use of Braces*," Steel Structures*, J. Singapore, Structural Steel Society, Vol. 5, No. 1, pp. 15–23.

CMAA (2015a), *Specification for Top Running Bridge and Gantry Type Multiple Girder Electric Overhead Traveling Cranes—No. 70*, Crane Manufacturers Association of America, Charlotte, N.C.

CMAA (2015b), *Specification for Top Running and Under Running Single Girder Electric Overhead Cranes Utilizing Under Running Trolley Hoist—No. 74,* Crane Manufacturers Association of America, Charlotte, N.C.

Collins, J.A. (1981), *Failure of Materials in Mechanical Design*, John Wiley & Sons, New York, N.Y.

Federal Construction Council (1974), Technical Report No. 65*, Expansion Joints in Buildings*, National Research Council, Washington, D.C.

Fisher, J.M. (1983), "The Importance of Tension Chord Bracing," *Engineering Journal,* AISC*,* Vol. 20, No. 3, pp. 103–106.

Fisher, J.M. and Van de Pas, J.P. (2002), "New Fatigue Provisions for the Design of Crane Runway Girders," *Engineering Journal,* AISC, Vol. 29, No. 2, pp. 65–73.

Fisher, J.M. and Kloiber, L.A. (2006), *Base Plate and Anchor Rod Design*, Design Guide 1, 2nd Ed., AISC, Chicago, Ill.

Fisher, J.M. and West, M.A. (1997), *Erection Bracing of Low-Rise Structural Steel Buildings*, Design Guide 10*,* AISC, Chicago, Ill.

FM Global (2019), *Loss Prevention Data for Roofing Contractors*, FM Global, Johnson, R.I.

Galambos, T.V. (1960), "Influence of Partial Base Fixity on Frame Stability," *ASCE Structural Division Journal*, Vol. 86, No. ST5, New York, N.Y.

Gaylord, E.H. Gaylord, C.N., and Stallmeyer, J.E. (1991), *Design of Steel Structures*, 3rd Ed., McGraw-Hill, New York, N.Y.

ICC (2015), *International Building Code*, International Code Council, Falls Church, Va.

Kit, P.G. (1996), "Hydraulic Bumpers for the Protection of Buildings, Cranes and Operators from Impact Damage," 1996 Fall Convention, Association of Iron and Steel Engineers, Subcommittee #13: Design and Construction of Mill Buildings.

MBMA (2012), *Low Rise Building Systems Manual*, Metal Building Manufacturers Association, Cleveland, Ohio.

Mueller, J.E. (1965), "Lessons from Crane Runways," *Engineering Journal*, AISC, Vol. 2, No. 1, pp. 16–20.

Nair, R.S. (1988a), "Secondary Stresses in Trusses," *Engineering Journal*, AISC, Vol. 25, No. 4, p. 144.

Nair, R.S. (1988b), "Simple Solutions to Stability Problems in the Design Office," *National Steel Construction Conference Proceedings*, AISC, Chicago, Ill.

NRCA (2015), *Roofing and Waterproofing Manual*, National Roofing Contractors Association, Rosemont, Ill.

OSHA (2010a), *Overhead and Gantry Cranes*, *Subpart N*, *29 CFR 1910.179*, Occupational Safety and Health Administration, Washington, D.C.

OSHA (2010b), *Safety and Health Standards for the Construction Industry, 29 CFR 1926 Part R, Safety Standards for Steel Structures,* Occupational Safety and Health Administration, Washington, D.C.

Reemsynder, H.S. (1978), "Fatigue Cracking in Welded Crane Runway Girders: Causes and Repair Procedures," *Iron and Steel Engineer*, AIST, April.

Ringo, B.C. and Anderson, R.B. (1996), *Designing Floor Slabs on Grade*, 2nd Ed., The Aberdeen Group, Addison, Ill.

Robertson, G.W. and Kurt, C.E. (1986), "Behavior of Nested Z-Shaped Purlins," Eighth International Specialty Conference on Cold-Formed Steel Structures, University of Missouri-Rolla, St. Louis, Mo.

Rolfes, J.A. and Fisher, J.M. (2001), "Fatigue of Crane Runway Girder Connections to Column Cap Plates," *Proceedings of the 2001 Iron and Steel Exposition*, AISE Annual Convention, AISE, Cleveland, Ohio.

Salmon, C.G., Johnson, J.E., and Malhas, F.A. (2008), *Steel Structures: Design and Behavior*, Prentice-Hall, Upper Saddle River, N.J.

Schlenker, N. (1972), "The Case for the Semi-Box Girder," *Engineering Journal*, AISC, Vol. 9, No. 1, pp. 32–39.

SDI (2015), *Diaphragm Design Manual*, 4th Ed., Steel Deck Institute, Glenshaw, Pa.

SDI (2016), *Manual of Construction with Steel Deck*, 3rd Ed., Steel Deck Institute, Glenshaw, Pa.

SDI (2017a), *Code of Standard Practice*, Steel Deck Institute, Glenshaw, Pa.

SDI (2017b), *Standard for Steel Roof Deck*, ANSI/SDI RD-2017, Steel Deck Institute, Glenshaw, Pa.

SJI (2007), *Structural Design of Steel Joist Roofs to Resist Ponding Loads*," Technical Digest #3, Steel Joist Institute, Florence, S.C.

SJI (2015a), *Code of Standard Practice for Steel Joists and Joist Girders*, Steel Joist Institute, Florence, S.C.

SJI (2015b), *Standard Specifications, Load Tables and Weight Tables for Steel Joists and Joist Girders*, 44th Ed., Steel Joist Institute, Florence, S.C.

Wald, F. and Jaspart, J.P. (1998), "Stiffness Design of Column Bases," *Journal of Constructional Steel Research*, Vol. 46 (1–3), Paper No. 135, Sheffield, U.K.

West, M.A., Fisher, J.M., and Griffis, L.G. (2003), *Serviceability Design Considerations for Steel Buildings,* Design Guide 3, 2nd Ed., AISC, Chicago, Ill.

Whiting (1967), *Whiting Crane Handbook*, 3rd Ed., Whiting Corporation, Harvey, Ill.

Smarter. Stronger. Steel.

American Institute of Steel Construction
312.670.2400 | www.aisc.org